LINEAR SYSTEMS

Linear Integrated Systems

LS358
LOG CONFORMANCE MONOLITHIC DUAL PNP TRANSISTORS

FEATURES		
LOG CONFORMANCE	Δre ≤1Ω from ideal TYP.	
ABSOLUTE MAXIMUM RATINGS NOTE 1 @ 25°C (unless otherwise noted)		
I_C	Collector Current	10mA
Maximum Temperatures		
Storage Temperature Range		-65°C to +200°C
Operating Junction Temperature		+150°C
Maximum Power Dissipation	**ONE SIDE**	**BOTH SIDES**
Device Dissipation @ Free Air	250mW	500mW
Linear Derating Factor	2.3mW/°C	4.3mW/°C

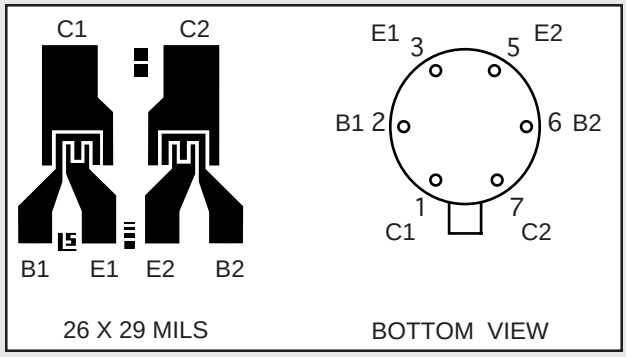

ELECTRICAL CHARACTERISTICS @ 25°C (unless otherwise noted)

SYMBOL	CHARACTERISTICS	LS358		UNITS	CONDITIONS	
Δre	Log Conformance	1.5		Ω	I_C= 10-100-1000μA	V_{CE} = 5V
BV_{CBO}	Collector-Base Breakdown Voltage	20	MIN.	V	I_C = 10μA	I_E = 0
BV_{CEO}	Collector to Emitter Voltage	20	MIN.	V	I_C = 10μA	I_B = 0
BV_{EBO}	Emitter-Base Breakdown Voltage	6.2	MIN.	V	I_E = 10μA	I_C = 0 NOTE 2
BV_{CCO}	Collector to Collector Voltage	45	MIN.	V	I_C = 10μA	I_E = 0
h_{FE}	DC Current Gain	100 600	MIN. MAX.		I_C = 10μA	V_{CE} = 5V
h_{FE}	DC Current Gain	100 600	MIN. MAX.		I_C = 100μA	V_{CE} = 5V
h_{FE}	DC Current Gain	100	MIN.		I_C = 1mA	V_{CE} = 5V
V_{CE}(SAT)	Collector Saturation Voltage	0.5	MAX.	V	I_C = 1mA I_B = 0.1 mA	
I_{CBO}	Collector Cutoff Current	0.2	MAX.	nA	I_E = 0	V_{CB} = 15V
I_{EBO}	Emitter Cutoff Current	0.2	MAX.	nA	I_C = 0	V_{EB} = 3V
C_{OBO}	Output Capacitance	2	MAX.	pF	I_E = 0	V_{CB} = 5V
C_{C1C2}	Collector to Collector Capacitance	2	MAX.	pF	V_{CC} = 0	
I_{C1C2}	Collector to Collector Leakage Current	0.5	MAX.	nA	V_{CC} = ±45V	
f_T	Current Gain Bandwidth Product	200	MIN.	MHz	I_C = 1mA	V_{CE} = 5V
NF	Narrow Band Noise Figure	3	MAX.	dB	I_C = 100μA BW = 200Hz f=1KHz	V_{CE} = 5V R_G = 10 KΩ

Linear Integrated Systems 4042 Clipper Court, Fremont, CA 94538 • TEL: (510) 490-9160 • FAX: (510) 353-0261

MATCHING CHARACTERISTICS @ 25°C (unless otherwise noted)

SYMBOL	PARAMETER	LS358		UNITS	CONDITIONS
$\|V_{BE1}-V_{BE2}\|$	Base Emitter Voltage Differential	0.4 1	TYP. MAX.	mV mV	I_C = 10 µA V_{CE} = 5V
$\Delta\|(V_{BE1}-V_{BE2})\|/°C$	Base Emitter Voltage Differential Change with Temperature	1 10	TYP. MAX.	µV/°C µV/°C	I_C= 10 µA V_{CE} = 5V T_A= -55°C to +125°C
$\|I_{B1}- I_{B2}\|$	Base Current Differential	5	MAX.	nA	I_C = 10µA V_{CE} = 5V
$\|\Delta(I_{B1}- I_{B2})\|/°C$	Base Current Differential Change with Temperature	0.5	MAX.	nA/°C	I_C= 10 µA V_{CE} = 5V T_A= -55°C to +125°C
h_{FE1}/h_{FE2}	DC Current Gain Differential	5	TYP.	%	I_C = 10µA V_{CE} = 5V

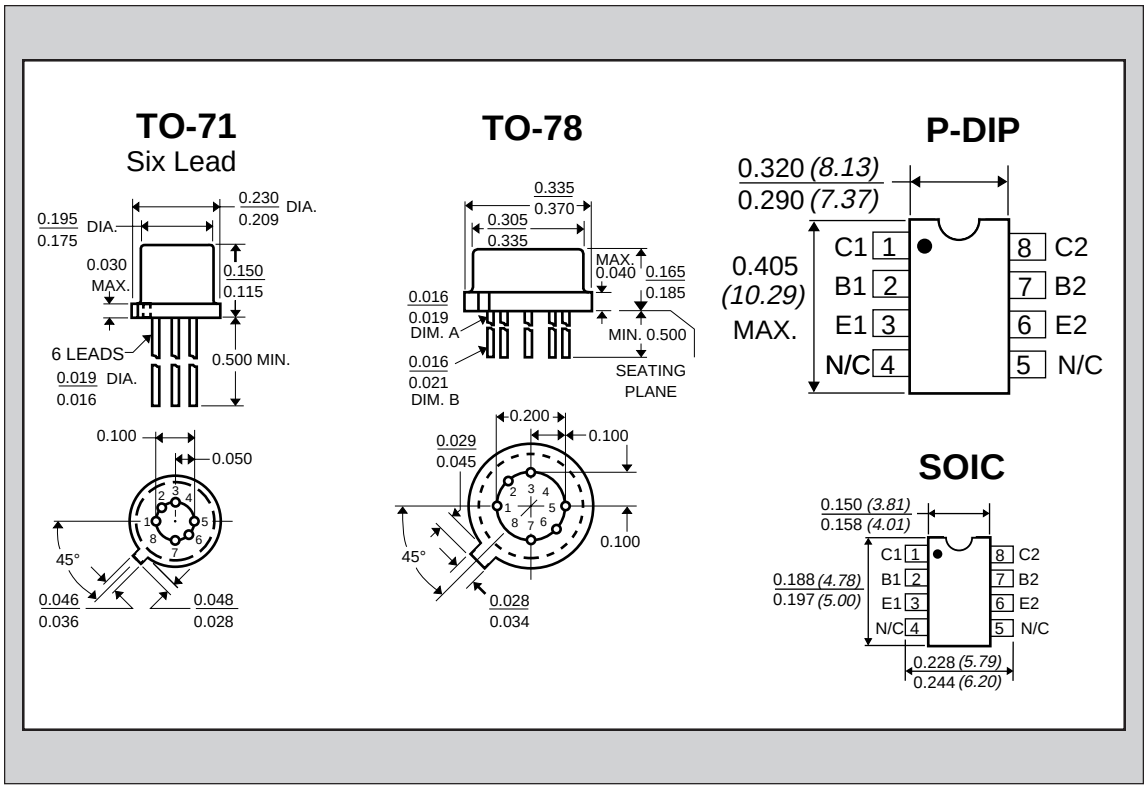

NOTES:

1. These ratings are limiting values above which the serviceability of any semiconductor may be impaired.
2. The reverse base-to-emitter voltage must never exceed 6.2 volts; the reverse base-to-emitter current must never exceed 10 µA.