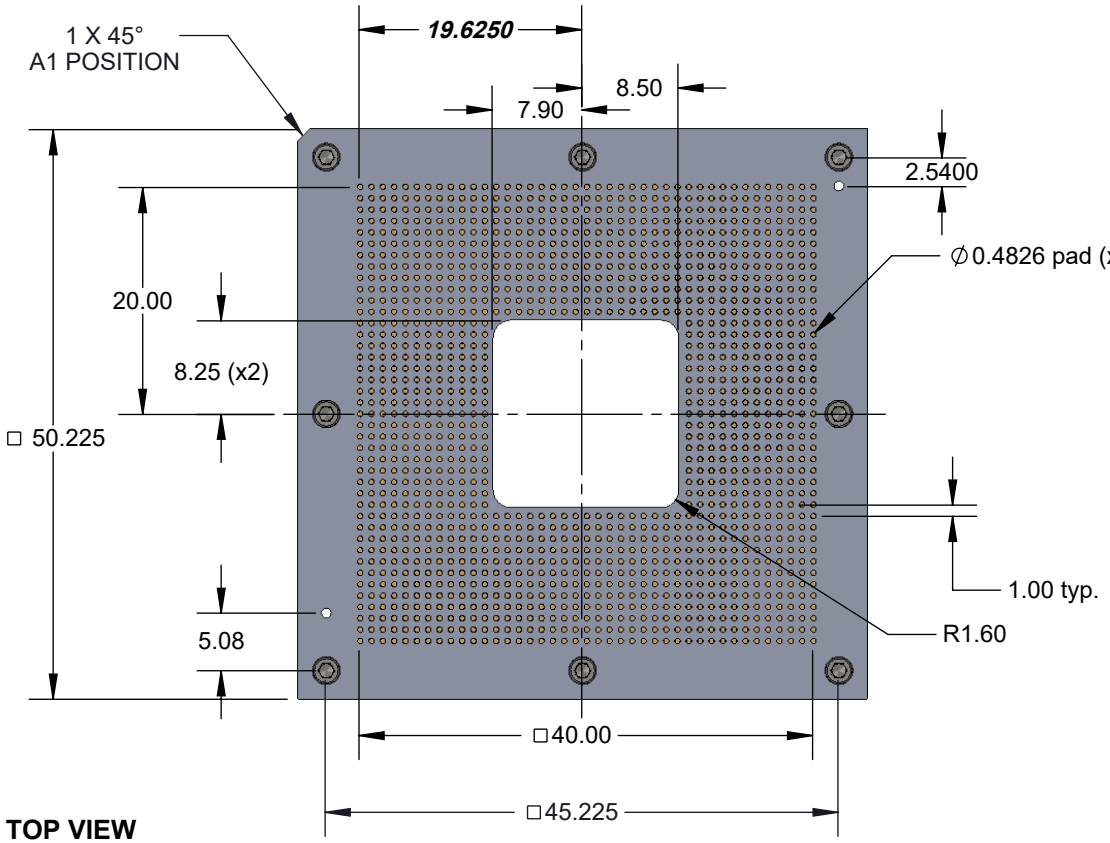

TOP VIEW

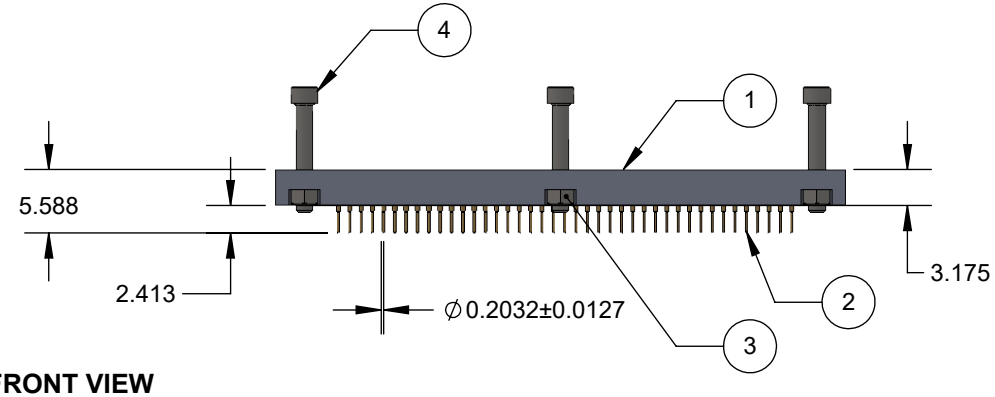

FRONT VIEW

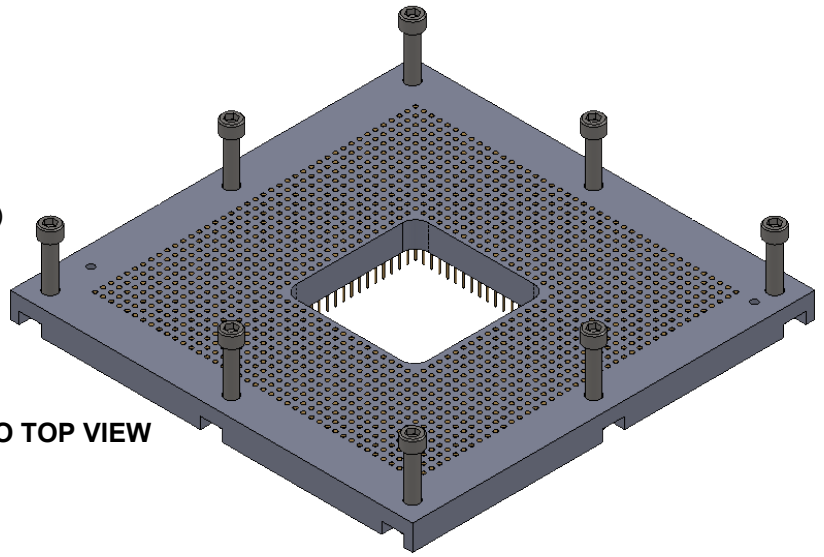

ISO TOP VIEW

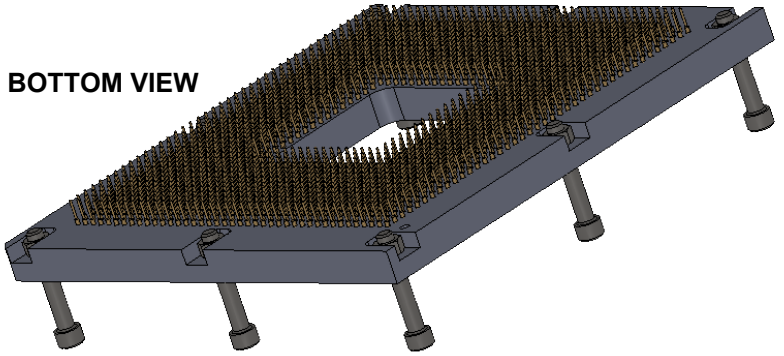

ISO BOTTOM VIEW

ITEM NO.	DESCRIPTION	MATERIAL
1	Substrate	High temp insulator
2	Male pin	Au over Ni plated
3	Nut	Brass
4	Mounting screw	Steel

RoHS

Description: LS-BGA1392 42.5mm 41x41 array 1mm pitch

Primary dimension units are millimeters, Secondary dimension units are [inches].

Tolerances: Hole diameters ±0.03mm [±0.001"], Pitches (from true position) ±0.025mm [±0.001"], substrate thickness tolerance ±10%, all other tolerances ±0.13mm [±0.005"] unless stated otherwise. Materials and specifications are subject to change without notice.

LS-BGA1392A-05 Drawing	Material: N/A Finish: N/A Weight: 15.64	STATUS: Released	SHEET: 1 OF 1	REV. A
Ironwood Electronics, Inc. Tele: (800) 404-0204 www.ironwoodelectronics.com		DRAWN BY: M. Raske	SCALE: 1.5:1	
		FILE: LS-BGA1392A-05 Dwg	DATE: 01/27/2016	