Top View

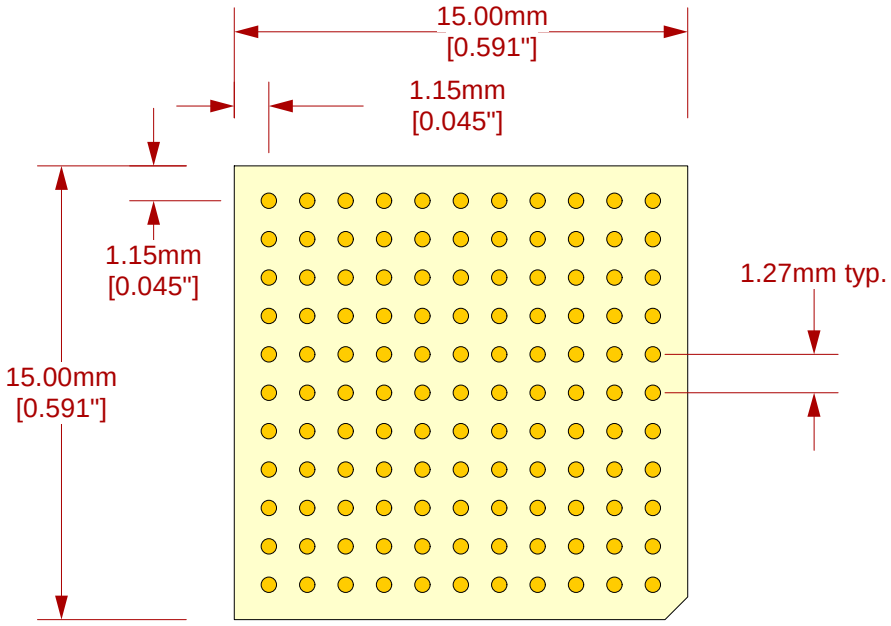


Side View

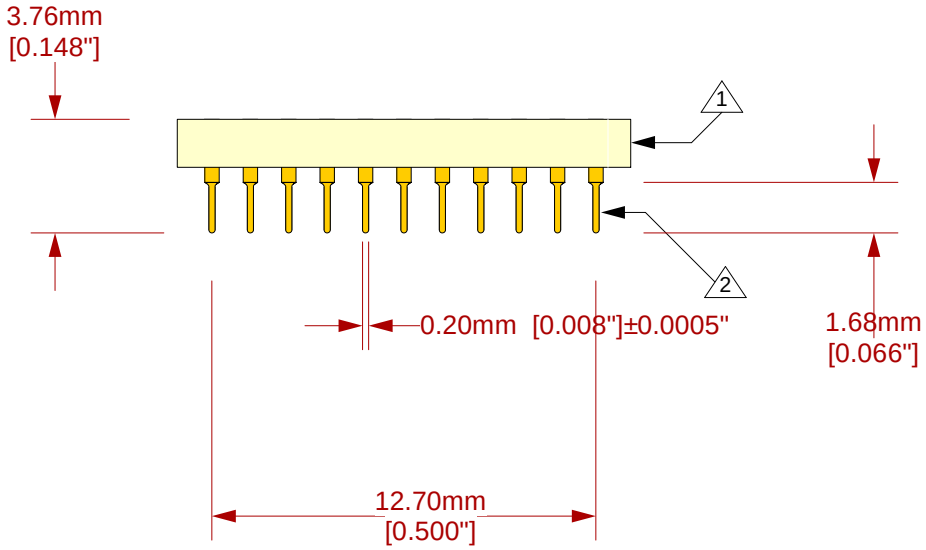


1. Substrate: 1.59mm ±0.18mm [0.0625" ±0.007"] FR4/G10 or equivalent high temp material.

2. Pins: material- Brass Alloy 360 1/2 hard; finish- 0.25µm [10µ"] Au over 1.27µm [50µ"] Ni (min.).

Description: Giga-snaP BGA SMT Land Socket
121 position BGA surface mount land pattern to terminal pins (1.27mm [0.050"] centers, 11x11 array)

Tolerances: diameters ±0.03mm [±0.001"], PCB perimeters ±0.13mm [±0.005"], PCB thicknesses ±0.18mm [±0.007"], pitches (from true position) ±0.08mm [±0.003"], all other tolerances ±0.13mm [±0.005"] unless stated otherwise. Materials and specifications are subject to change without notice.

| LS-BGA121A-31 Drawing | Status: Released | Scale: 4:1 | Rev: A |
|---|---|---|---|
| © 2005 IRONWOOD ELECTRONICS, INC.<br>PO BOX 21151 ST. PAUL, MN 55121<br>Tele: (651) 452-8100<br>www.ironwoodelectronics.com | Drawing: S.Natarajan | Date: 6/2/05 | |
| | File: LS-BGA121A-31 Dwg | Modified: | |