Advanced Photonix
An OSI Optoelectronics Company

# LS-0370 Series

RoHS COMPLIANT

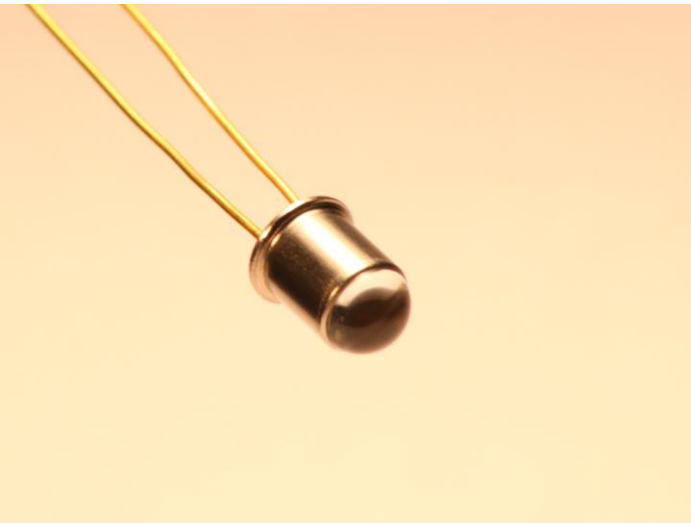

## FEATURES

- 370nm Peak Wavelength
- Long Life
- RoHS Compliant
- High Reliability

## DESCRIPTION

The LS-0370 Series are InGaN UV LEDs with peak wavelength of 370nm. Available in a TO-46 lens cap and a TO-46 glob top. These LEDs have a long operating life and are more environmentally friendly than traditional mercury UV lamps.

## APPLICATIONS

- Industrial Curing
- Dental Curing
- Epoxy, Ink, and Coating Curing
- Currency Validation
- Forensics Equipment

---

> Absolute Maximum Ratings

| Part No. | Reverse Voltage [V] | Operating Temperature [C] | Storage Temperature [C] | Package |
|---|---|---|---|---|
| LS-0370-014 | 5 | -40 to +100 | -40 to +125 | Lens Cap |
| LS-0370-015 | | -40 to +85 | | Glob Top |

> Electrical and Optical Characteristics

| **Typical Characteristics** (T=23°C unless specified) | | | | | | |
|---|---|---|---|---|---|---|
| **Parameter** | **Test Conditions** | **Symbol** | **Min** | **Typical** | **Max** | **Unit** |
| Forward Voltage | $I_f$ = 20 mA | $V_F$ | 3.2 | 3.6 | 4.2 | V |
| Reverse Current | $V_R$=5V | $I_R$ | - | - | 10 | µA |
| Peak Wavelength | $I_f$ = 20 mA | $\lambda_p$ | 370 | - | 375 | nm |
| Spectral Halfwidth | $I_f$ = 20 mA | $\Delta\lambda$ | - | 12 | - | nm |
| Optical Power Output | $I_f$ = 20 mA | $\Phi_e$ | 1.5 | - | 2.5 | mW |



Advanced Photonix, 1240 Avenida Acaso, Camarillo CA 93012 • Phone (805) 987-0146
http://www.advancedphotonix.com/

Rev 9/18/2018
© 2018 Advanced Photonix. All rights reserved.

> Spectrum

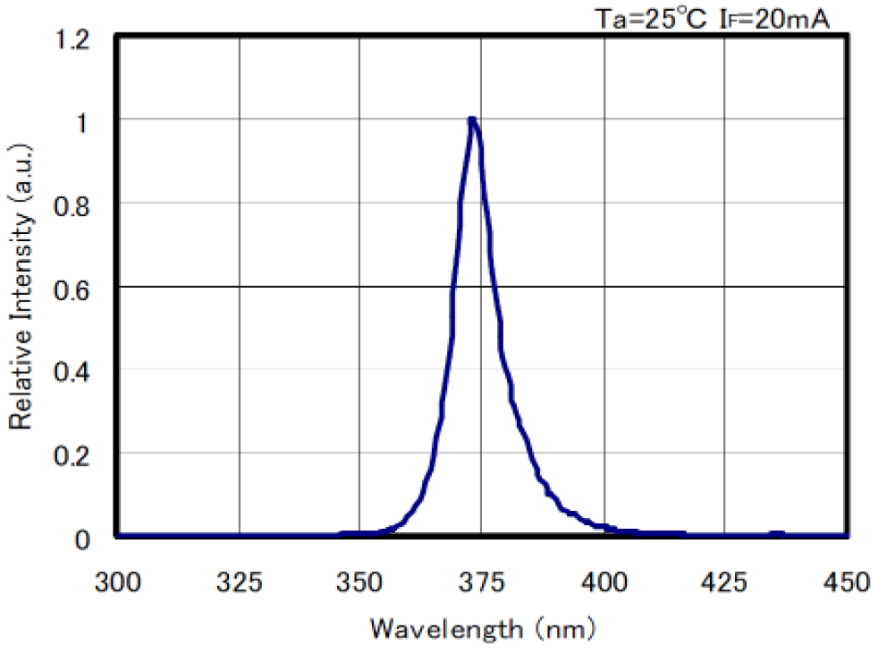


> TO-46 Lens Cap [LS-0370-014]

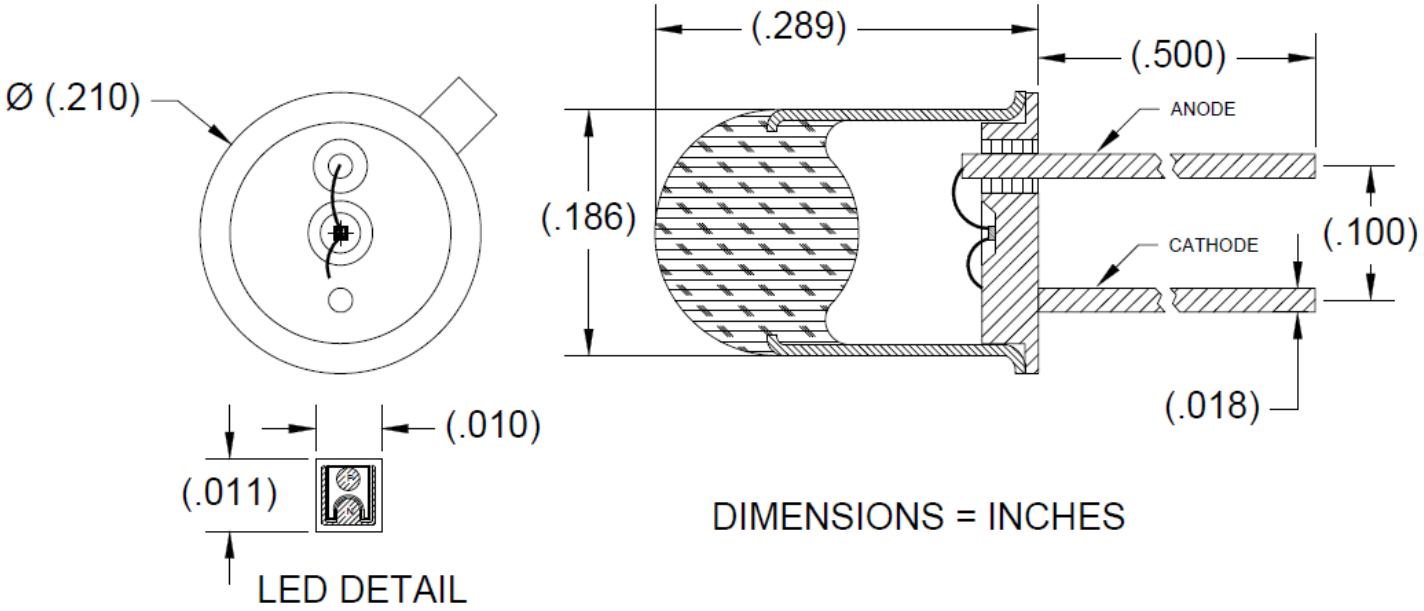




Advanced Photonix, 1240 Avenida Acaso, Camarillo CA 93012 • Phone (805) 987-0146
http://www.advancedphotonix.com/

Rev 9/18/2018
© 2018 Advanced Photonix. All rights reserved.

> TO-46 Glob Top [LS-0370-015]

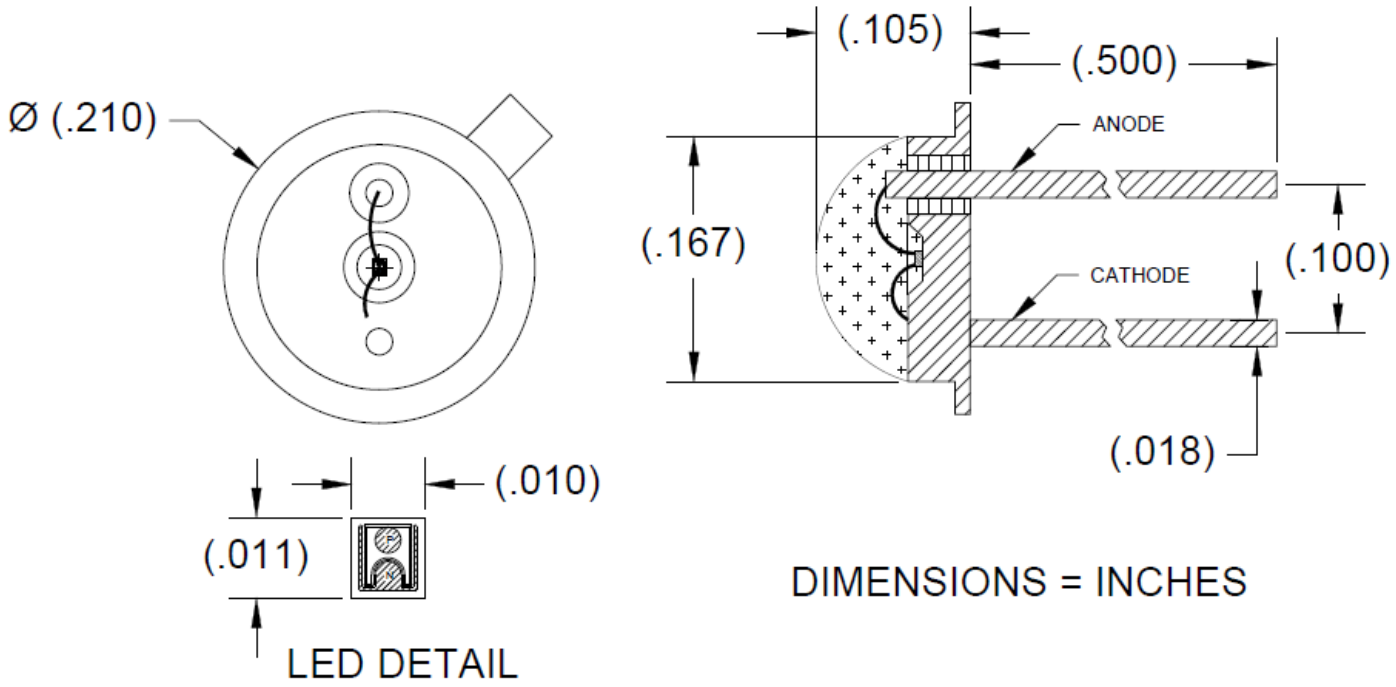


>Soldering Conditions: 260˚C 1/16 inch away from case for 3 seconds max.

## LEGAL DISCLAIMER

*All products, product specifications, and data are subject to change without notice to improve reliability, function, design, or otherwise. Advanced Photonix, its affiliates, agents, employees and all persons acting on its or their behalf (collectively, "Advanced Photonix"), disclaim any and all liability for any errors, inaccuracies or incompleteness contained in any datasheet or in any other disclosure relating to any product. Advanced Photonix makes no warranty, representation or guarantee regarding the suitability of the products for any particular purpose or the continuing production of any product. To the maximum extent permitted by applicable law, Advanced Photonix disclaims (i) any and all liability arising out of the application or use of any product, (ii) any and all liability, including without limitation special, consequential or incidental damages, and (iii) any and all implied warranties, including warranties of fitness for particular purpose, non-infringement and merchantability Statements regarding the suitability of products for certain types of applications are based on Advanced Photonix's knowledge of typical requirements that are often placed on Advanced Photonix products in generic applications. Such statements are not binding statements about the suitability of products for a particular application. It is the customer's responsibility to validate that a particular product with the properties described in the product specification is suitable for use in a particular application. Parameters provided in datasheets and / or specifications may vary in different applications and performance may vary over time. All operating parameters, including typical parameters, must be validated for each customer application by the customer's technical experts. Product specifications do not expand or otherwise modify Advanced Photonix's terms and conditions of purchase, including but not limited to the warranty expressed therein. Except as expressly indicated in writing, Advanced Photonix products are not designed for use in life-saving, or life-sustaining applications, or for any other application in which the failure of the Advanced Photonix product could result in personal injury or death. Customers using or selling Advanced Photonix products not expressly indicated for use in such applications do so at their own risk. No license, express or implied, by estoppel or otherwise, to any intellectual property rights is granted by this document or by any conduct of Advanced Photonix. Product names and markings noted herein may be trademarks of their respective owners.*

## MATERIALS SAFETY

*This product is free of conflict minerals and meets REACH compliance. Please see website for reports.*



Advanced Photonix, 1240 Avenida Acaso, Camarillo CA 93012 • Phone (805) 987-0146
http://www.advancedphotonix.com/

Rev 9/18/2018
© 2018 Advanced Photonix. All rights reserved.