LRI2K

13.56 MHz, 2048-bit EEPROM tag IC with 64-bit UID and kill code, ISO 15693 and ISO 18000-3 Mode 1 compliant

Features

- ISO 15693 standard fully compliant
- ISO 18000-3 Mode 1 standard fully compliant
- 13.56 MHz ±7k Hz carrier frequency
- To tag: 10% or 100% ASK modulation using 1/4 (26 Kbit/s) or 1/256 (1.6 Kbit/s) pulse position coding
- From tag: load modulation using Manchester coding with 423 kHz and 484 kHz subcarriers in low (6.6 Kbit/s) or high (26 Kbit/s) data rate mode. Supports the 53 Kbit/s data rate with Fast commands
- Internal tuning capacitor (21 pF, 28.5 pF, 97 pF)
- 1 000 000 Erase/Write cycles (minimum)
- 40 year data retention (minimum)
- 2048 bits EEPROM with Block Lock feature
- 64-bit unique identifier (UID)
- Electrical article surveillance capable (software controlled)
- Kill function
- Read & Write (Block of 32 bits)
- 5 ms programming time
- Packages
  - ECOPACK® (RoHS compliant)

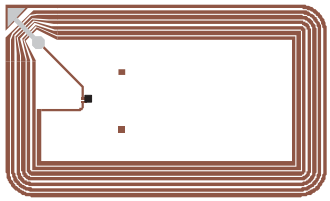

Inlay A1



Antenna (A6)

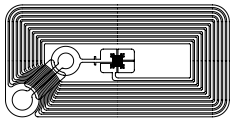

Antenna (A7)



UFDFPN8 (MB)
2x3mm² (MLP)

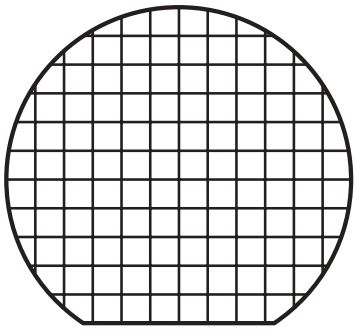

Wafer

Contents

1 Description 10

1.1 Memory mapping 11

1.2 Commands 12

1.3 Initial dialogue for vicinity cards 13

1.3.1 Power transfer 13

1.3.2 Frequency 13

1.3.3 Operating field 13

2 Communication signal from VCD to LRI2K 14

3 Data rate and data coding 15

3.1 Data coding mode: 1 out of 256 15

3.2 Data coding mode: 1 out of 4 17

3.3 VCD to LRI2K frames 18

3.4 Start of frame (SOF) 18

4 Communications signal from LRI2K to VCD 19

4.1 Load modulation 19

4.2 Subcarrier 19

4.3 Data rates 19

5 Bit representation and coding 20

5.1 Bit coding using one subcarrier 20

5.1.1 High data rate 20

5.1.2 Low data rate 21

5.2 Bit coding using two subcarriers 22

5.2.1 High data rate 22

5.2.2 Low data rate 22

6 LRI2K to VCD frames 23

6.1 SOF when using one subcarrier 23

6.1.1 High data rate 23

6.1.2 Low data rate 24

6.2 SOF when using two subcarriers 24
6.2.1 High data rate 24
6.2.2 Low data rate 24
6.3 EOF when using one subcarrier 25
6.3.1 High data rate 25
6.3.2 Low data rate 25
6.4 EOF when using two subcarriers 26
6.4.1 High data rate 26
6.4.2 Low data rate 26

7 Unique identifier (UID) 27

8 Application family identifier (AFI) 28

9 Data storage format identifier (DSFID) 29
9.1 CRC 29

10 LRI2K protocol description 30

11 LRI2K states 32
11.1 Power-off state 32
11.2 Ready state 32
11.3 Quiet state 32
11.4 Selected state 32

12 Modes 34
12.1 Addressed mode 34
12.2 Non-Addressed mode (general request) 34
12.3 Select mode 34

13 Request format 35
13.1 Request flags 35

14 Response format 37
14.1 Response flags 37
14.2 Response error code 38

15 Anti-collision 39
15.1 Request parameters 39

16 Request processing by the LRI2K 41

17 Explanation of the possible cases 42

18 Inventory Initiated command 44

19 Timing definition 45
19.1 t1: LRI2K response delay 45
19.2 t2: VCD new request delay 45
19.3 t_3: VCD new request delay in the absence of a response from the LRI2K 45

20 Commands codes 46
20.1 Inventory 47
20.2 Stay Quiet 48
20.3 Read Single Block 49
20.4 Write Single Block 51
20.5 Lock Block 52
20.6 Read Multiple Block 53
20.7 Select 55
20.8 Reset to Ready 56
20.9 Write AFI 57
20.10 Lock AFI 58
20.11 Write DSFID 59
20.12 Lock DSFID 60
20.13 Get System Info 61
20.14 Get Multiple Block Security Status 62
20.15 Kill 64
20.16 Write Kill 65
20.17 Lock Kill 66
20.18 Fast Read Single Block 68
20.19 Fast Inventory Initiated 70
20.20 Fast Initiate 71

20.21 Fast Read Multiple Block 72
20.22 Inventory Initiated 74
20.23 Initiate 75

21 Maximum rating 76

22 DC and AC parameters 77

23 Package mechanical 79

24 Part numbering 83

Appendix A Anti-collision algorithm (Informative) 84
A.1 Algorithm for pulsed slots 84

Appendix B CRC (Informative) 85
B.1 CRC error detection method 85
B.2 CRC calculation example 85
B.3 Application Family Identifier (AFI) (Informative) 87

Revision history 88

List of tables

Table 1. Signal names . . . 10
Table 2. LRI2K memory map . . . 11
Table 3. 10% modulation parameters . . . 14
Table 4. Response data rate . . . 19
Table 5. UID format . . . 27
Table 6. CRC transmission rules . . . 29
Table 7. VCD request frame format . . . 30
Table 8. LRI2K response frame format . . . 30
Table 9. LRI2K response depending on request flags . . . 33
Table 10. General request format . . . 35
Table 11. Definitions of request flags 1 to 4 . . . 35
Table 12. Request flags 5 to 8 when bit 3 = 0 . . . 36
Table 13. Request flags 5 to 8 when bit 3 = 1 . . . 36
Table 14. General response format . . . 37
Table 15. Definitions of response flags 1 to 8 . . . 37
Table 16. Response error code definition . . . 38
Table 17. Inventory request format . . . 39
Table 18. Example of the addition of 0-bits to an 11-bit mask value . . . 39
Table 19. Timing values . . . 45
Table 20. Command codes . . . 46
Table 21. Inventory request format . . . 47
Table 22. Inventory response format . . . 47
Table 23. Stay Quiet request format . . . 48
Table 24. Read Single Block request format . . . 49
Table 25. Read Single Block response format when Error_Flag is NOT set . . . 49
Table 26. Block Locking status . . . 49
Table 27. Read Single Block response format when Error_Flag is set . . . 49
Table 28. Write Single Block request format . . . 51
Table 29. Write Single Block response format when Error_Flag is NOT set . . . 51
Table 30. Write Single Block response format when Error_Flag is set . . . 51
Table 31. Lock Single Block request format . . . 52
Table 32. Lock Block response format when Error_Flag is NOT set . . . 52
Table 33. Lock Block response format when Error_Flag is set . . . 52
Table 34. Read Multiple Block request format . . . 53
Table 35. Read Multiple Block response format when Error_Flag is NOT set . . . 53
Table 36. Block Locking status . . . 53
Table 37. Read Multiple Block response format when Error_Flag is set . . . 53
Table 38. Select request format . . . 55
Table 39. Select Block response format when Error_Flag is NOT set . . . 55
Table 40. Select response format when Error_Flag is set . . . 55
Table 41. Reset to Ready request format . . . 56
Table 42. Reset to Ready response format when Error_Flag is NOT set . . . 56
Table 43. Reset to ready response format when Error_Flag is set . . . 56
Table 44. Write AFI request format . . . 57
Table 45. Write AFI response format when Error_Flag is NOT set . . . 57
Table 46. Write AFI response format when Error_Flag is set . . . 57
Table 47. Lock AFI request format . . . 58
Table 48. Lock AFI response format when Error_Flag is NOT set . . . 58

Table 49. Lock AFI response format when Error_Flag is set . . . 58
Table 50. Write DSFID request format . . . 59
Table 51. Write DSFID response format when Error_Flag is NOT set . . . 59
Table 52. Write DSFID response format when Error_Flag is set . . . 59
Table 53. Lock DSFID request format . . . 60
Table 54. Lock DSFID response format when Error_Flag is NOT set . . . 60
Table 55. Lock DSFID response format when Error_Flag is set. . . . 60
Table 56. Get System Info request format . . . 61
Table 57. Get System Info response format when Error_Flag is NOT set . . . 61
Table 58. Get System Info response format when Error_Flag is set . . . 61
Table 59. Get Multiple Block Security Status request format . . . 62
Table 60. Get Multiple Block Security Status response format when Error_Flag is NOT set . . . 62
Table 61. Block Locking status . . . 62
Table 62. Get Multiple Block Security Status response format when Error_Flag is set . . . 62
Table 63. Kill request format . . . 64
Table 64. Kill response format when Error_Flag is NOT set. . . . 64
Table 65. Kill response format when Error_Flag is set . . . 64
Table 66. Write Kill request format . . . 65
Table 67. Write Kill response format when Error_Flag is NOT set . . . 65
Table 68. Write Kill response format when Error_Flag is set . . . 65
Table 69. Lock Kill request format . . . 66
Table 70. Lock Kill response format when Error_Flag is NOT set . . . 66
Table 71. Lock Kill response format when Error_Flag is set. . . . 66
Table 72. Fast Read Single Block request format . . . 68
Table 73. Fast Read Single Block response format when Error_Flag is NOT set . . . 68
Table 74. Block Locking status . . . 68
Table 75. Fast Read Single Block response format when Error_Flag is set. . . . 68
Table 76. Fast Inventory Initiated request format . . . 70
Table 77. Fast Inventory Initiated response format . . . 70
Table 78. Fast Initiate request format . . . 71
Table 79. Fast Initiate Initiated response format. . . . 71
Table 80. Fast Read Multiple Block request format . . . 72
Table 81. Fast Read Multiple Block response format when Error_Flag is NOT set . . . 72
Table 82. Block Locking status if Option_Flag is set . . . 72
Table 83. Fast Read Multiple Block response format when Error_Flag is set . . . 72
Table 84. Inventory Initiated request format . . . 74
Table 85. Inventory Initiated response format . . . 74
Table 86. Initiate request format . . . 75
Table 87. Initiate Initiated response format. . . . 75
Table 88. Absolute maximum ratings . . . 76
Table 89. AC characteristics . . . 77
Table 90. DC characteristics. . . . 78
Table 91. Operating conditions . . . 78
Table 92. A1 Antenna on tape mechanical data . . . 79
Table 93. A6 antenna on tape mechanical data . . . 80
Table 94. A7 antenna on tape mechanical data . . . 81
Table 95. UFDFPN8 - 8-lead ultra thin fine pitch dual flat package no lead (MLP) mechanical data . . . 82
Table 96. Ordering information scheme . . . 83
Table 97. CRC definition. . . . 85
Table 98. AFI coding. . . . 87
Table 99. Document revision history . . . 88

List of figures

Figure 1. Pad connections . . . 10
Figure 2. MLP connections . . . 10
Figure 3. 100% modulation waveform . . . 14
Figure 4. 10% modulation waveform . . . 14
Figure 5. 1 out of 256 coding mode . . . 15
Figure 6. Detail of one time period . . . 16
Figure 7. 1 out of 4 coding mode . . . 17
Figure 8. 1 out of 4 coding example . . . 17
Figure 9. SOF to select 1 out of 256 data coding mode . . . 18
Figure 10. SOF to select 1 out of 4 data coding mode . . . 18
Figure 11. EOF for either data coding mode . . . 18
Figure 12. Logic 0, High data rate . . . 20
Figure 13. Logic 0, High data rate x2 . . . 20
Figure 14. Logic 1, High data rate . . . 20
Figure 15. Logic 1, High data rate x2 . . . 20
Figure 16. Logic 0, Low data rate . . . 21
Figure 17. Logic 0, Low data rate x2 . . . 21
Figure 18. Logic 1, Low data rate . . . 21
Figure 19. Logic 1, Low data rate x2 . . . 21
Figure 20. Logic 0, High data rate . . . 22
Figure 21. Logic 1, High data rate . . . 22
Figure 22. Logic 0, Low data rate . . . 22
Figure 23. Logic 1, Low data rate . . . 22
Figure 24. Start of frame, High data rate, one subcarrier . . . 23
Figure 25. Start of frame, High data rate, one subcarrier x2 . . . 23
Figure 26. Start of frame, Low data rate, one subcarrier . . . 24
Figure 27. Start of frame, Low data rate, one subcarrier x2 . . . 24
Figure 28. Start of frame, High data rate, two subcarriers . . . 24
Figure 29. Start of frame, Low data rate, two subcarriers . . . 24
Figure 30. End of frame, High data rate, one subcarrier . . . 25
Figure 31. End of frame, High data rate, one subcarrier x2 . . . 25
Figure 32. End of frame, Low data rate, one subcarrier . . . 25
Figure 33. End of frame, Low data rate, one subcarrier x2 . . . 25
Figure 34. End of frame, High data rate, two subcarriers . . . 26
Figure 35. End of frame, Low data rate, two subcarriers . . . 26
Figure 36. LRI2K decision tree for AFI . . . 28
Figure 37. LRI2K protocol timing . . . 31
Figure 38. LRI2K state transition diagram . . . 33
Figure 39. Principle of comparison between the mask, the slot number and the UID . . . 40
Figure 40. Description of a possible anti-collision sequence . . . 43
Figure 41. Stay Quiet frame exchange between VCD and LRI2K . . . 48
Figure 42. READ Single Block frame exchange between VCD and LRI2K . . . 50
Figure 43. Write Single Block frame exchange between VCD and LRI2K . . . 51
Figure 44. Lock Block frame exchange between VCD and LRI2K . . . 52
Figure 45. Read Multiple Block frame exchange between VCD and LRI2K . . . 54
Figure 46. Select frame exchange between VCD and LRI2K . . . 55
Figure 47. Reset to Ready frame exchange between VCD and LRI2K . . . 56
Figure 48. Write AFI frame exchange between VCD and LRI2K . . . 57

Figure 49. Lock AFI frame exchange between VCD and LRI2K 58
Figure 50. Write DSFID frame exchange between VCD and LRI2K 59
Figure 51. Lock DSFID frame exchange between VCD and LRI2K 60
Figure 52. Get System Info frame exchange between VCD and LRI2K 61
Figure 53. Get Multiple Block Security Status frame exchange between VCD and LRI2K 63
Figure 54. Kill frame exchange between VCD and LRI2K 64
Figure 55. Write Kill frame exchange between VCD and LRI2K 65
Figure 56. Lock Kill frame exchange between VCD and LRI2K 67
Figure 57. Fast Read Single Block frame exchange between VCD and LRI2K. 69
Figure 58. Fast Initiate frame exchange between VCD and LRI2K 71
Figure 59. Fast Read Multiple Block frame exchange between VCD and LRI2K 73
Figure 60. Initiate frame exchange between VCD and LRI2K 75
Figure 61. LRI2K synchronous timing, transmit and receive 78
Figure 62. A1 Antenna on tape outline 79
Figure 63. A6 antenna on tape outline 80
Figure 64. A7 antenna on tape outline 81
Figure 65. UFDFPN8 - 8-lead ultra thin fine pitch dual flat package no lead (MLP) outline 82

1 Description

The LRI2K is a contactless memory powered by the received carrier electromagnetic wave. It is a 2048-bit electrically erasable programmable memory (EEPROM). The memory is organized as 64 blocks of 32 bits. The LRI2K is accessed via the 13.56 MHz carrier electromagnetic wave on which incoming data are demodulated from the received signal amplitude modulation (ASK: amplitude shift keying). The received ASK wave is 10% or 100% modulated with a data rate of 1.6 Kbit/s using the 1/256 pulse coding mode or a data rate of 26 Kbit/s using the 1/4 pulse coding mode.

Outgoing data are generated by the LRI2K load variation using Manchester coding with one or two subcarrier frequencies at 423 kHz and 484 kHz. Data are transferred from the LRI2K at 6.6 Kbit/s in low data rate mode and 26 Kbit/s fast data rate mode. The LRI2K supports 53 Kbit/s in high data rate mode with one subcarrier frequency at 423 kHz.

The LRI2K follows the ISO 15693 recommendation for radio-frequency power and signal interface.

Figure 1. Pad connections

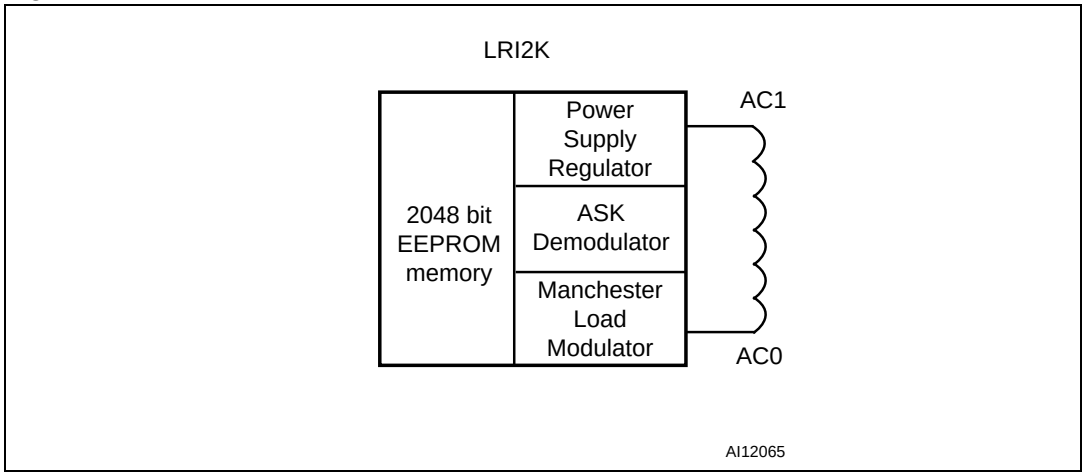

Table 1. Signal names

Signal name	Function
AC1	Antenna coil
AC0	Antenna coil

Figure 2. MLP connections

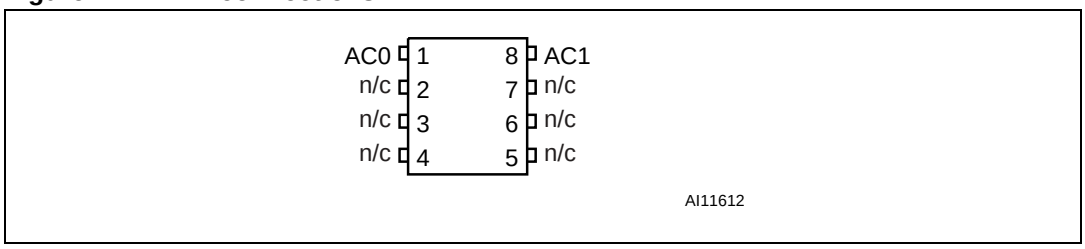

1. n/c means not connected internally.

1.1 Memory mapping

The LRI2K is divided into 64 blocks of 32 bits. Each block can be individually write-protected using the Lock command.

Table 2. LRI2K memory map

Add	0 7	8 15	16 23	24 31
0	User area			
1	User area			
2	User area			
3	User area			
4	User area			
5	User area			
6	User area			
7	User area			
8	User area			
	User area			
	User area			
	User area			
60	User area			
61	User area			
62	User area			
63	User area			
	UID 0	UID 1	UID 2	UID 3
	UID 4	UID 5	UID 6	UID 7
	AFI	DSFID		
	KILL code			

The User area consists of blocks that are always accessible in read mode. Write operations are possible if the addressed block is not protected. During a write operation, the 32 bits of the block are replaced by the new 32-bit value.

The LRI2K also has a 64-bit block that is used to store the 64-bit unique identifier (UID). The UID is compliant to the ISO 15963 description, and its value is used during the anti-collision sequence (Inventory). This block is not accessible by the user and its value is written by ST on the production line.

The LRI2K also includes an AFI register in which the application family identifier is stored, and a DSFID register in which the data storage family identifier used in the anti-collision algorithm is stored. The LRI2K has an additional 32-bit block in which the kill code is stored.

1.2 Commands

The LRI2K supports the following commands:

- ***Inventory***, used to perform the anti-collision sequence.
- ***Stay Quiet***, used to put the LRI2K in quiet mode, where it does not respond to any inventory command.
- ***Select***, used to select the LRI2K. After this command, the LRI2K processes all Read/Write commands with Select_Flag set.
- ***Reset To Ready***, used to put the LRI2K in the ready state.
- ***Read Block***, used to output the 32 bits of the selected block and its locking status.
- ***Write Block***, used to write the 32-bit value in the selected block, provided that it is not locked.
- ***Lock Block***, used to lock the selected block. After this command, the block cannot be modified.
- ***Read Multiple Blocks***, used to read the selected blocks and send back their value.
- ***Write AFI***, used to write the 8-bit value in the AFI register.
- ***Lock AFI***, used to lock the AFI register.
- ***Write DSFID***, used to write the 8-bit value in the DSFID register.
- ***Lock DSFID***, used to lock the DSFID register.
- ***Get System Info***, used to provide the system information value
- ***Get Multiple Block Security Status***, used to send the security status of the selected block.
- ***Initiate***, used to trigger the tag response to the Inventory Initiated sequence.
- ***Inventory Initiated***, used to perform the anti-collision sequence triggered by the Initiate command.
- ***Kill***, used to definitively deactivate the tag.
- ***Write Kill***, used to write the 32-bit Kill code value
- ***Lock Kill***, used to lock the Kill Code register.
- ***Fast Initiate***, used to trigger the tag response to the Inventory Initiated sequence.
- ***Fast Inventory Initiated***, used to perform the anti-collision sequence triggered by the Initiate command.
- ***Fast Read Block***, used to output the 32 bits of the selected block and its locking status.
- ***Fast Read Multiple Blocks***, used to read the selected blocks and send back their value.

1.3 Initial dialogue for vicinity cards

The dialog between the vicinity coupling device (VCD) and the vicinity integrated circuit card or VICC (LRI2K) takes place as follows:

- activation of the LRI2K by the RF operating field of the VCD
- transmission of a command by the VCD
- transmission of a response by the LRI2K

These operations use the RF power transfer and communication signal interface described below (see *Power transfer*, *Frequency* and *Operating field*). This technique is called RTF (Reader Talk First).

1.3.1 Power transfer

Power is transferred to the LRI2K by radio frequency at 13.56 MHz via coupling antennas in the LRI2K and the VCD. The RF operating field of the VCD is transformed on the LRI2K antenna as an AC voltage which is rectified, filtered and internally regulated. The amplitude modulation (ASK) on this received signal is demodulated by the ASK demodulator.

1.3.2 Frequency

The ISO 15693 standard defines the carrier frequency (f_c) of the operating field as 13.56 MHz ±7 kHz.

1.3.3 Operating field

The LRI2K operates continuously between H_{min} and H_{max}.

- The minimum operating field is H_{min} and has a value of 150 mA/m rms.
- The maximum operating field is H_{max} and has a value of 5 A/m rms.

A VCD must generate a field of at least H_{min} and not exceeding H_{max} in the operating volume.

2 Communication signal from VCD to LRI2K

Communications between the VCD and the LRI2K take place using the modulation principle of ASK (amplitude shift keying). Two modulation indexes are used, 10% and 100%. The LRI2K decodes both. The VCD determines which index is used.

The modulation index is defined as [a – b]/[a + b] where a is the peak signal amplitude and b the minimum signal amplitude of the carrier frequency.

Depending on the choice made by the VCD, a "pause" will be created as described in *Figure 3* and *Figure 4*.

The LRI2K is operational for any degree of modulation index between 10% and 30%.

Figure 3. 100% modulation waveform

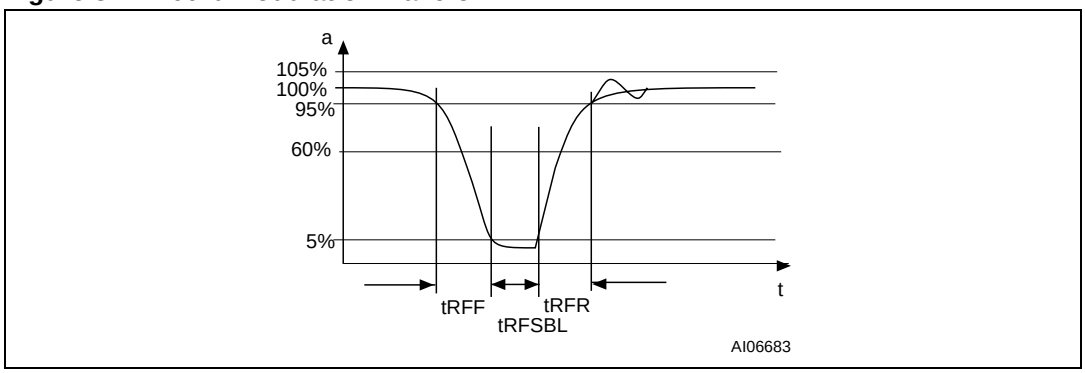

Table 3. 10% modulation parameters

Symbol	Parameter definition	Value
hr	0.1 x (a – b)	max
hf	0.1 x (a – b)	max

Figure 4. 10% modulation waveform

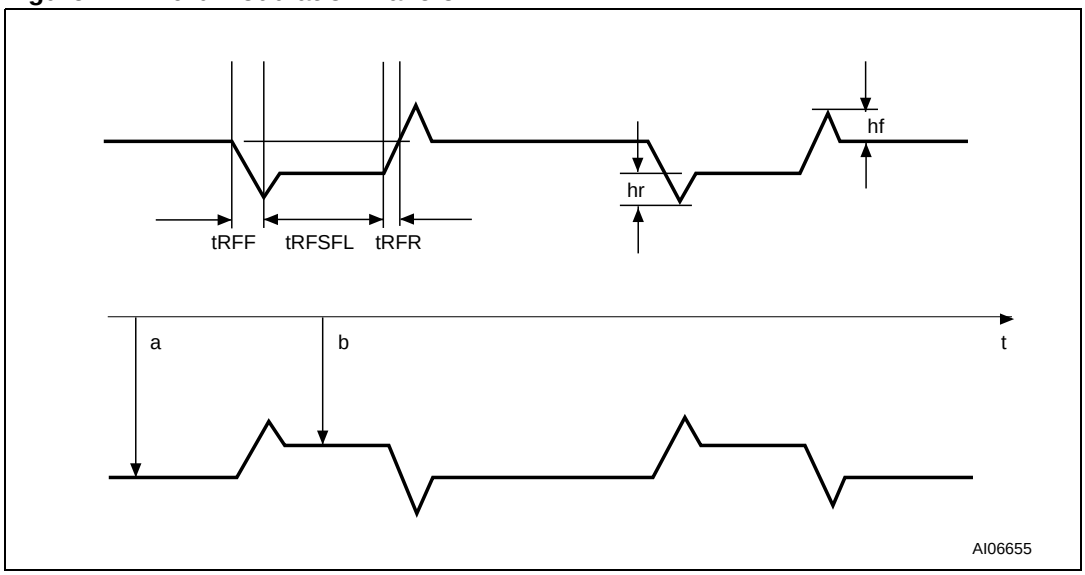

3 Data rate and data coding

The data coding implemented in the LRI2K uses pulse position modulation. Both data coding modes that are described in the ISO 15693 are supported by the LRI2K. The selection is made by the VCD and indicated to the LRI2K within the start of frame (SOF).

3.1 Data coding mode: 1 out of 256

The value of one single byte is represented by the position of one pause. The position of the pause on 1 of 256 successive time periods of 18.88 µs (256/f_C), determines the value of the byte. In this case the transmission of one byte takes 4.833 ms and the resulting data rate is 1.65 kbits/s (f_C/8192).

Figure 5 illustrates this pulse position modulation technique. In this Figure, data E1h (225 decimal) is sent by the VCD to the LRI2K.

The pause occurs during the second half of the position of the time period that determines the value, as shown in *Figure 6*.

A pause during the first period transmits the data value 00h. A pause during the last period transmits the data value FFh (255 decimal).

Figure 5. 1 out of 256 coding mode

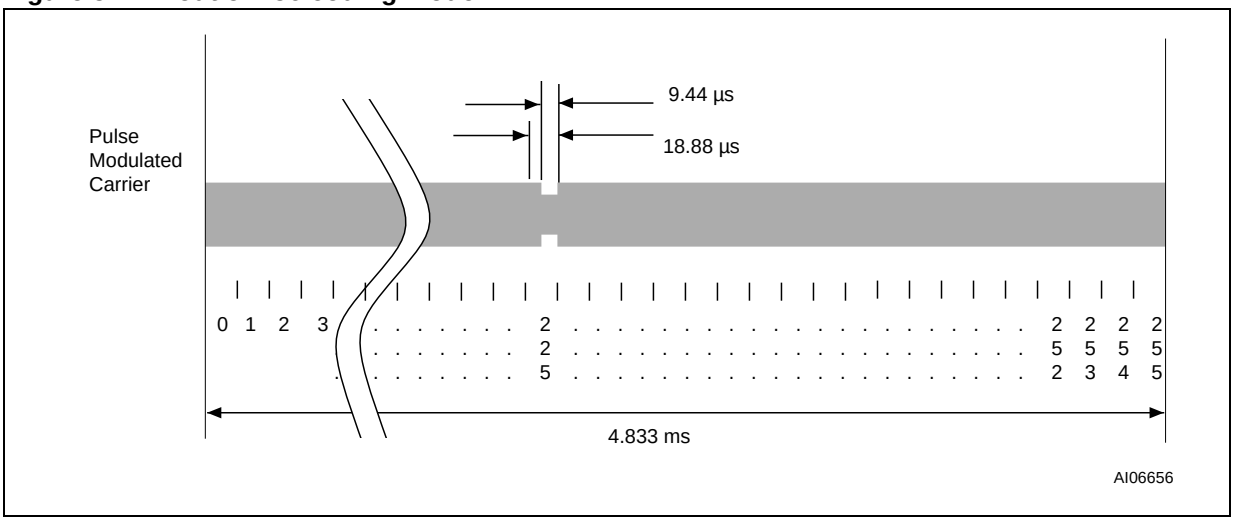

Figure 6. Detail of one time period

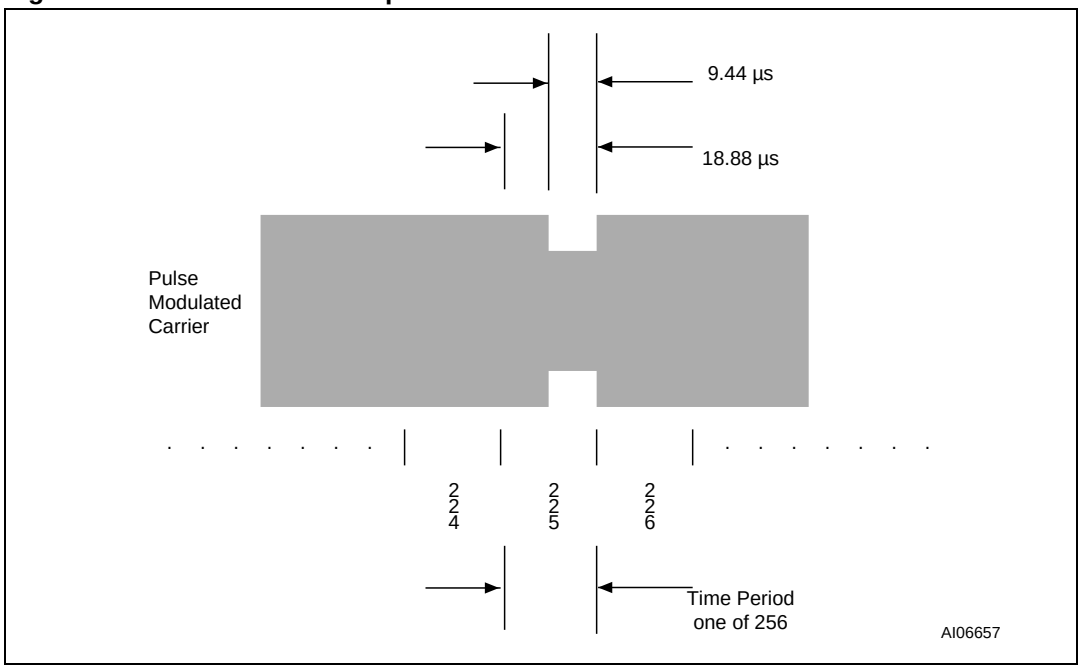

3.2 Data coding mode: 1 out of 4

The value of 2 bits is represented by the position of one pause. The position of the pause on 1 of 4 successive time periods of 18.88 µs (256/f_C) determines the value of the 2 bits. Four successive pairs of bits form a byte, where the least significant pair of bits is transmitted first.

In this case the transmission of one byte takes 302.08 µs and the resulting data rate is 26.48 kbit/s (f_C/512). *Figure 7* illustrates the 1 out of 4 pulse position technique and coding. *Figure 8* shows the transmission of E1h (225d - 1110 0001b) by the VCD.

Figure 7. 1 out of 4 coding mode

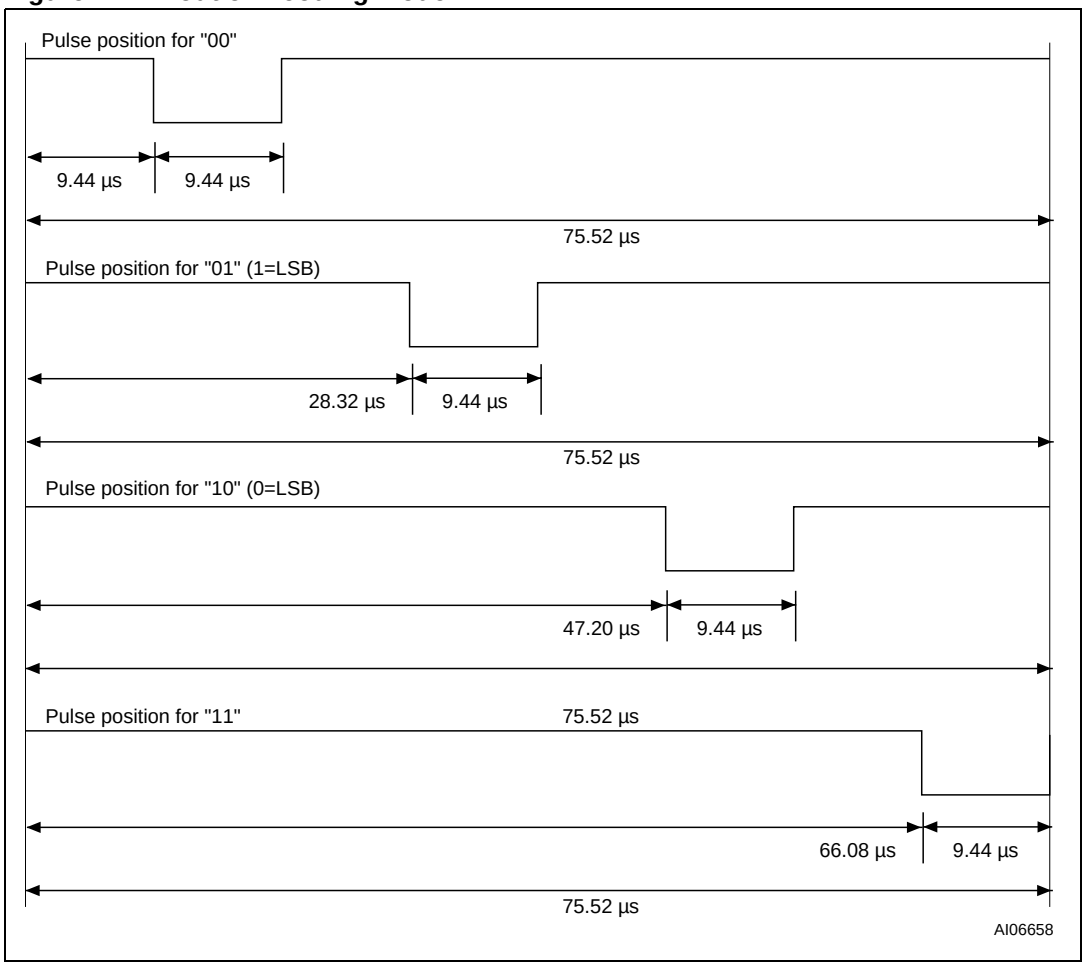

Figure 8. 1 out of 4 coding example

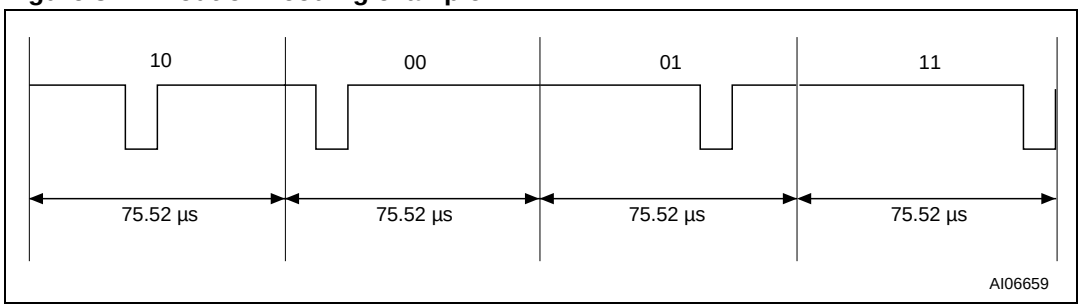

3.3 VCD to LRI2K frames

Frames are delimited by a start of frame (SOF) and an end of frame (EOF). They are implemented using code violation. Unused options are reserved for future use.

The LRI2K is ready to receive a new command frame from the VCD 311.5 µs (t_2) after sending a response frame to the VCD.

The LRI2K takes a Power-On time of 0.1 ms after being activated by the powering field. After this delay, the LRI2K is ready to receive a command frame from the VCD.

3.4 Start of frame (SOF)

The SOF defines the data coding mode the VCD is to use for the following command frame.

The SOF sequence described in *Figure 9* selects the 1 out of 256 data coding mode.

The SOF sequence described in *Figure 10* selects the 1 out of 4 data coding mode.

The EOF sequence for either coding mode is described in *Figure 11*.

Figure 9. SOF to select 1 out of 256 data coding mode

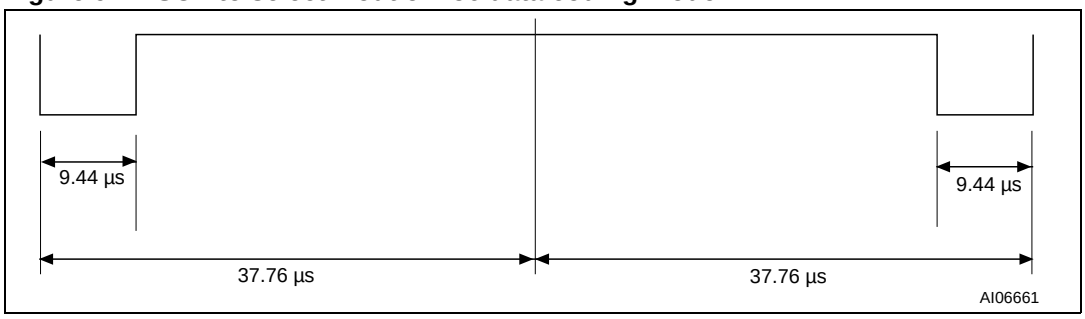

Figure 10. SOF to select 1 out of 4 data coding mode

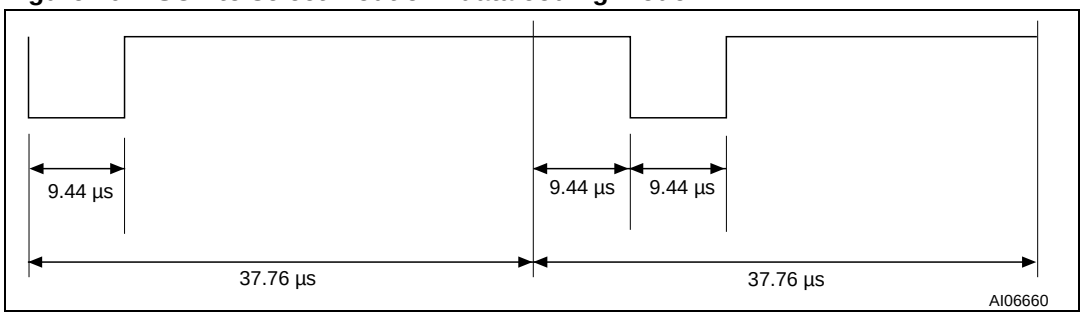

Figure 11. EOF for either data coding mode

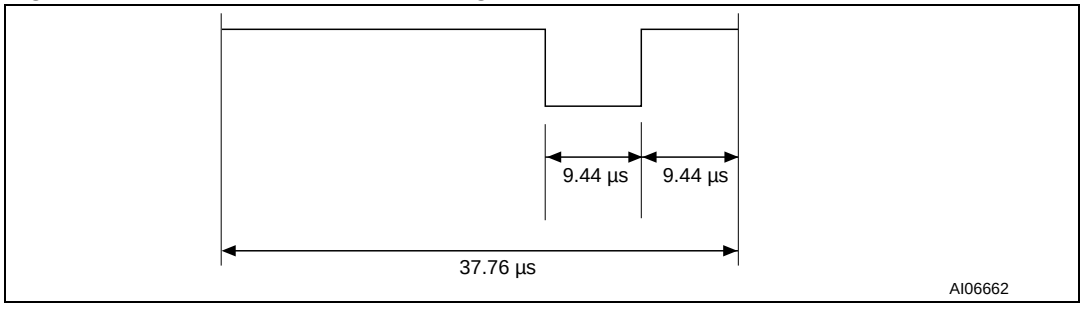

4 Communications signal from LRI2K to VCD

The LRI2K has several modes defined for some parameters, owing to which it can operate in different noise environments and meet different application requirements.

4.1 Load modulation

The LRI2K is capable of communication with the VCD via an inductive coupling area whereby the carrier is loaded to generate a subcarrier with frequency f_S. The subcarrier is generated by switching a load in the LRI2K.

The load-modulated amplitude received on the VCD antenna shall be at least 10 mV when measured as described in the test methods defined in International Standard ISO 10373-7.

4.2 Subcarrier

The LRI2K supports the one-subcarrier and two-subcarrier response formats. These formats are selected by the VCD using the first bit in the protocol header. When one subcarrier is used, the frequency f_{S1} of the subcarrier load modulation is 423.75 kHz (f_C/32). When two subcarriers are used, frequency f_{S1} is 423.75 kHz (f_C/32), and frequency f_{S2} is 484.28 kHz (f_C/28). When using the two-subcarrier mode, the LRI2K generates a continuous phase relationship between f_{S1} and f_{S2}.

4.3 Data rates

The LRI2K can respond using the low or the high data rate format. The selection of the data rate is made by the VCD using the second bit in the protocol header. It also supports the x2 mode available on all the Fast commands. *Table 4* shows the different data rates produced by the LRI2K using the different response format combinations.

Table 4. Response data rate

Data rate		One subcarrier	Two subcarriers
Low	Standard commands	6.62 kbits/s (f_c/2048)	6.67 kbits/s (f_c/2032)
	Fast commands	13.24 kbits/s (f_c/1024)	not applicable
High	Standard commands	26.48 kbits/s (f_c/512)	26.69 kbits/s (f_c/508)
	Fast commands	52.97 kbits/s (f_c/256)	not applicable

5 Bit representation and coding

Data bits are encoded using Manchester coding, according to the following schemes. For the low data rate, the same subcarrier frequency or frequencies is/are used, in this case the number of pulses is multiplied by 4 and all times are increased by this factor. For the Fast commands using one subcarrier, all pulse numbers and times are divided by 2.

5.1 Bit coding using one subcarrier

5.1.1 High data rate

A logic 0 starts with 8 pulses at 423.75 kHz (f_C/32) followed by an unmodulated time of 18.88 µs as shown in *Figure 12*.

Figure 12. Logic 0, High data rate

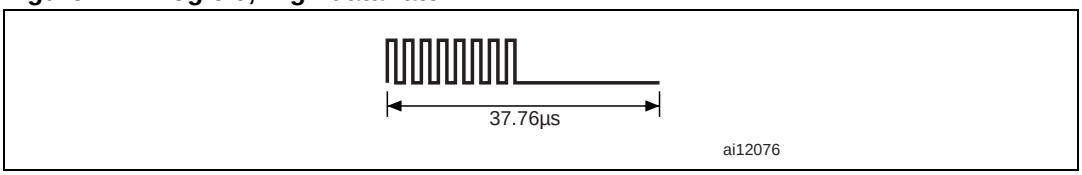

For the Fast commands, a logic 0 starts with 4 pulses at 423.75 kHz (f_C/32) followed by an unmodulated time of 9.44 µs as shown in *Figure 13*.

Figure 13. Logic 0, High data rate x2

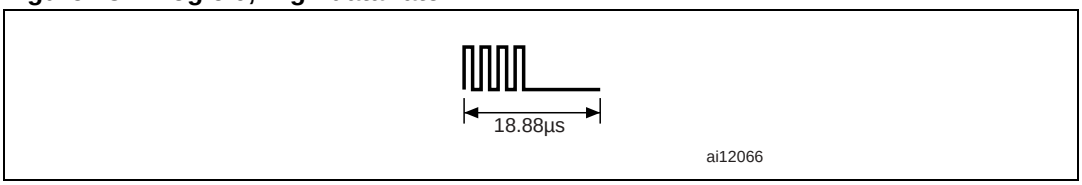

A logic 1 starts with an unmodulated time of 18.88 µs followed by 8 pulses at 423.75 kHz (f_C/32) as shown in *Figure 14*.

Figure 14. Logic 1, High data rate

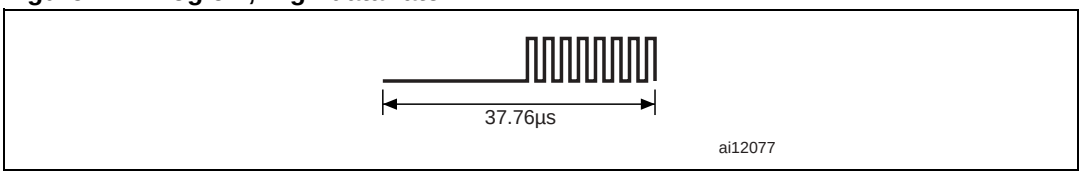

For the Fast commands, a logic 1 starts with an unmodulated time of 9.44 µs followed by 4 pulses at 423.75 kHz (f_C/32) as shown in *Figure 15*.

Figure 15. Logic 1, High data rate x2

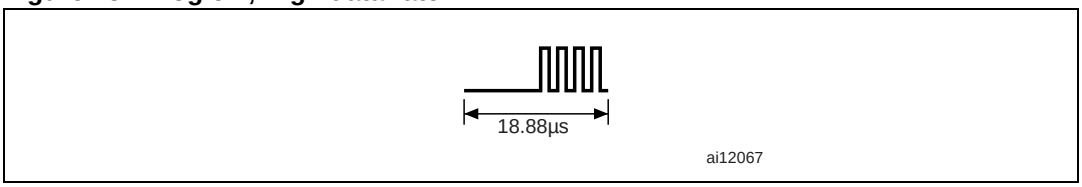

5.1.2 Low data rate

A logic 0 starts with 32 pulses at 423.75 kHz (f_C/32) followed by an unmodulated time of 75.52 µs as shown in *Figure 16*.

Figure 16. Logic 0, Low data rate

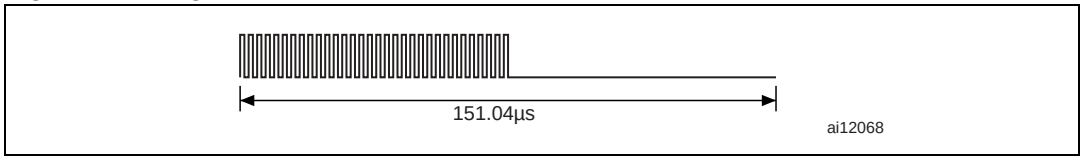

For the fast commands, a logic 0 starts with 16 pulses of 423,75 kHz (f_C/32) followed by an unmodulated time of 37,76 µs as shown in *Figure 17*.

Figure 17. Logic 0, Low data rate x2

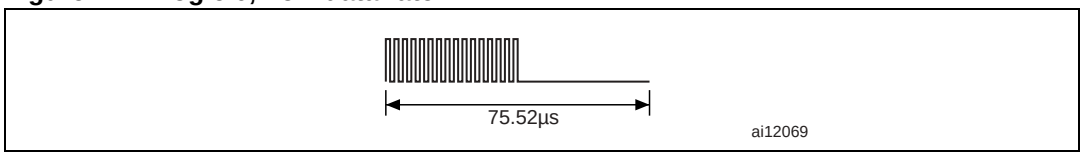

A logic 1 starts with an unmodulated time of 75,52 µs followed by 32 pulses of 423,75 kHz (f_C/32) as shown in *Figure 18*.

Figure 18. Logic 1, Low data rate

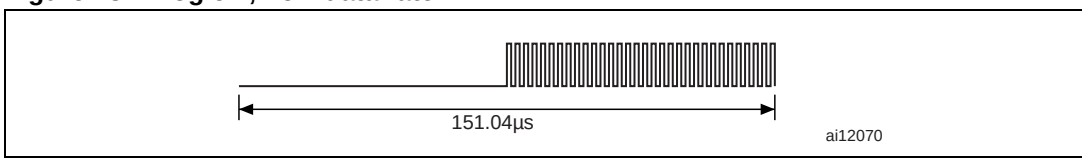

For the Fast commands, a logic 1 starts with an unmodulated time of 37.76 µs followed by 16 pulses at 423.75 kHz (f_C/32) as shown in *Figure 19*.

Figure 19. Logic 1, Low data rate x2

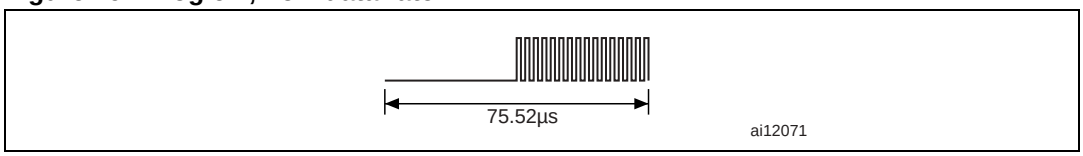

5.2 Bit coding using two subcarriers

5.2.1 High data rate

A logic 0 starts with 8 pulses at 423.75 kHz (f_C/32) followed by 9 pulses at 484.28 kHz (f_C/28) as shown in *Figure 20*. For the Fast commands, the x2 mode is not available.

Figure 20. Logic 0, High data rate

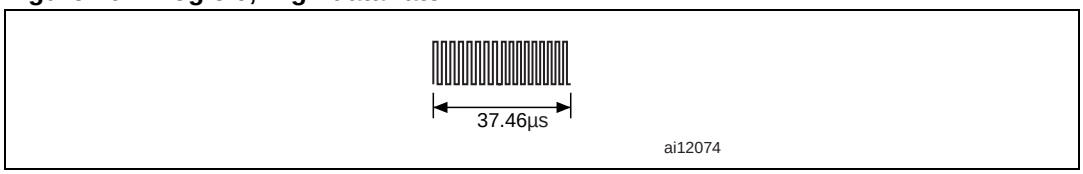

A logic 1 starts with 9 pulses at 484.28 kHz (f_C/28) followed by 8 pulses at 423.75 kHz (f_C/32) as shown in *Figure 21*. For the Fast commands, the x2 mode is not available.

Figure 21. Logic 1, High data rate

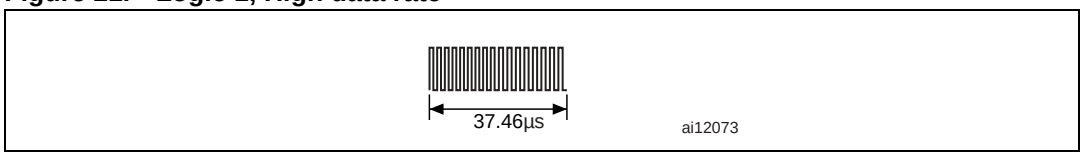

5.2.2 Low data rate

A logic 0 starts with 32 pulses at 423.75 kHz (f_C/32) followed by 36 pulses at 484.28 kHz (f_C/28) as shown in *Figure 22*. For the Fast commands, the x2 mode is not available.

Figure 22. Logic 0, Low data rate

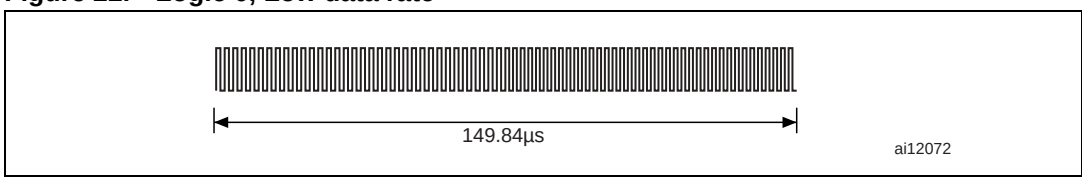

A logic 1 starts with 36 pulses at 484.28kHz (f_C/28) followed by 32 pulses at 423.75kHz (f_C/32) as shown in *Figure 23*. For the fast commands, the x2 mode is not available.

Figure 23. Logic 1, Low data rate

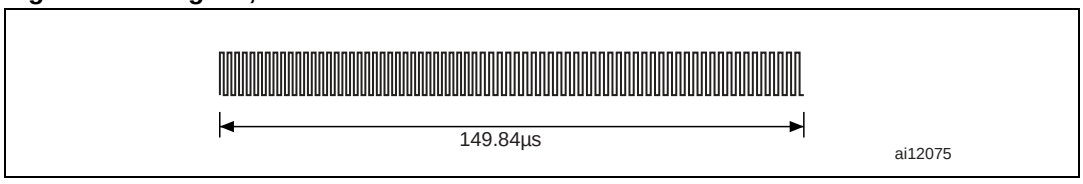

6 LRI2K to VCD frames

Frames are delimited by an SOF and an EOF. They are implemented using code violation. Unused options are reserved for future use. For the low data rate, the same subcarrier frequency or frequencies is/are used. In this case the number of pulses is multiplied by 4. For the Fast commands using one subcarrier, all pulse numbers and times are divided by 2.

6.1 SOF when using one subcarrier

6.1.1 High data rate

The SOF includes an unmodulated time of 56.64 µs followed by 24 pulses at 423.75 kHz (f_C/32), and a logic 1 that consists of an unmodulated time of 18.88 µs followed by 8 pulses at 423.75 kHz. The SOF is shown in *Figure 24*.

Figure 24. Start of frame, High data rate, one subcarrier

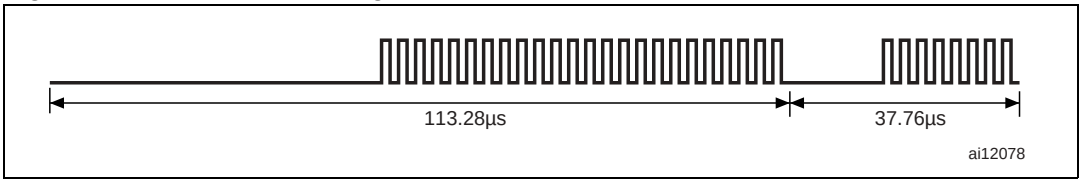

For the Fast commands, the SOF comprises an unmodulated time of 28.32 µs, followed by 12 pulses at 423.75 kHz (f_C/32), and a logic 1 that consists of an unmodulated time of 9.44 µs followed by 4 pulses at 423.75 kHz as shown in *Figure 25*.

Figure 25. Start of frame, High data rate, one subcarrier x2

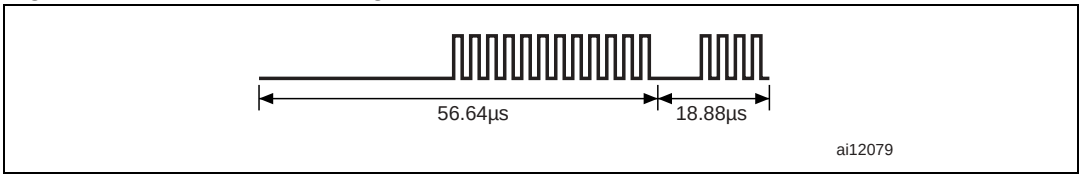

6.1.2 Low data rate

SOF comprises an unmodulated time of 226.56 µs, followed by 96 pulses at 423.75 kHz (f_C/32), and a logic 1 that consists of an unmodulated time of 75.52 µs followed by 32 pulses at 423.75 kHz as shown in *Figure 26*.

Figure 26. Start of frame, Low data rate, one subcarrier

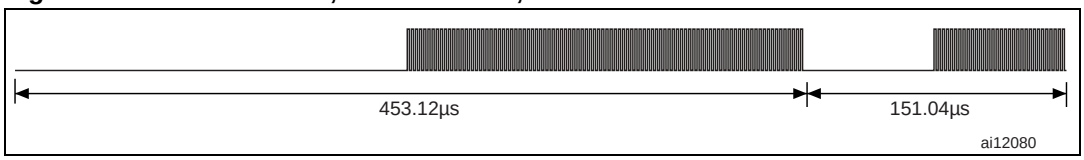

For the Fast commands, the SOF comprises an unmodulated time of 113.28 µs followed by 48 pulses at 423.75 kHz (f_C/32), and a logic 1 that includes an unmodulated time of 37.76 µs followed by 16 pulses at 423.75 kHz as shown in *Figure 27*.

Figure 27. Start of frame, Low data rate, one subcarrier x2

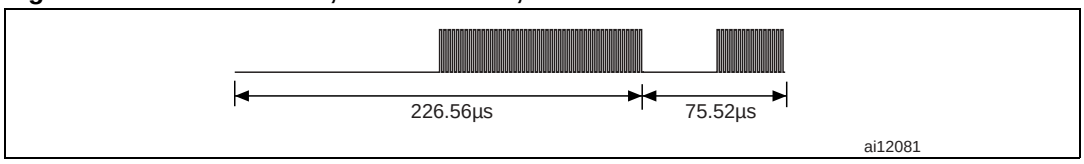

6.2 SOF when using two subcarriers

6.2.1 High data rate

The SOF comprises 27 pulses at 484.28 kHz (f_C/28), followed by 24 pulses at 423.75 kHz (f_C/32), and a logic 1 that includes 9 pulses at 484.28 kHz followed by 8 pulses at 423.75 kHz as shown in *Figure 28*.

For the Fast commands, the x2 mode is not available.

Figure 28. Start of frame, High data rate, two subcarriers

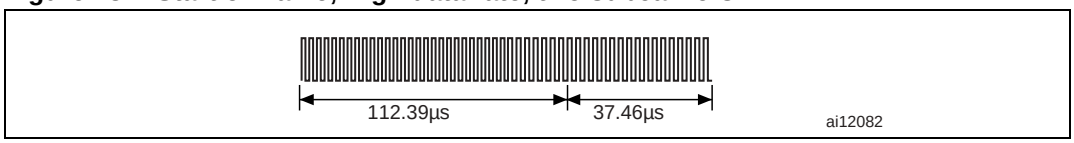

6.2.2 Low data rate

The SOF comprises 108 pulses at 484.28 kHz (f_C/28) followed by 96 pulses at 423.75 kHz (f_C/32), and a logic 1 that includes 36 pulses at 484.28 kHz followed by 32 pulses at 423.75 kHz as shown in *Figure 29*.

For the Fast commands, the x2 mode is not available.

Figure 29. Start of frame, Low data rate, two subcarriers

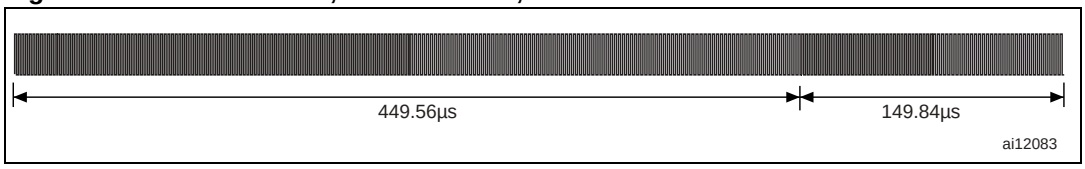

6.3 EOF when using one subcarrier

6.3.1 High data rate

The EOF comprises a logic 0 that includes 8 pulses at 423.75 kHz and an unmodulated time of 18.88 µs, followed by 24 pulses at 423.75 kHz (f_C/32) and by an unmodulated time of 56.64 µs as shown in *Figure 30*.

Figure 30. End of frame, High data rate, one subcarrier

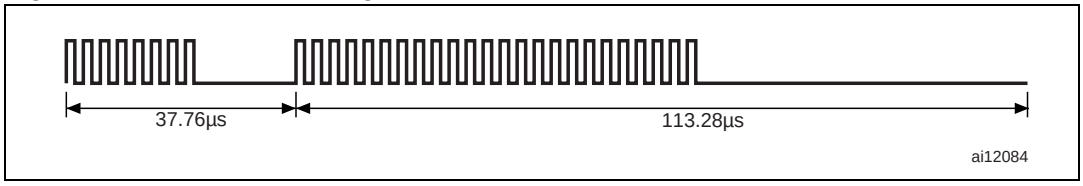

For the Fast commands, the EOF comprises a logic 0 that includes 4 pulses at 423.75 kHz and an unmodulated time of 9.44 µs, followed by 12 pulses at 423.75 kHz (f_C/32) and an unmodulated time of 28.32 µs as shown in *Figure 31*.

Figure 31. End of frame, High data rate, one subcarrier x2

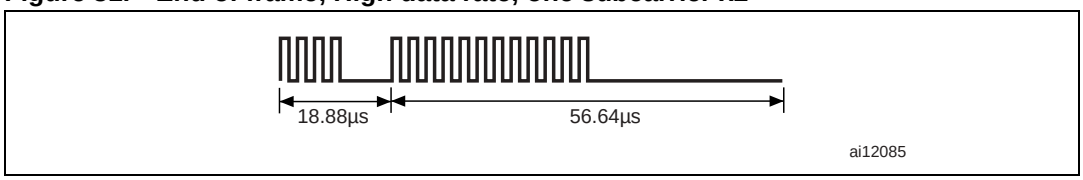

6.3.2 Low data rate

The EOF comprises a logic 0 that includes 32 pulses at 423.75 kHz and an unmodulated time of 75.52 µs, followed by 96 pulses at 423.75 kHz (f_C/32) and an unmodulated time of 226.56 µs as shown in *Figure 32*.

Figure 32. End of frame, Low data rate, one subcarrier

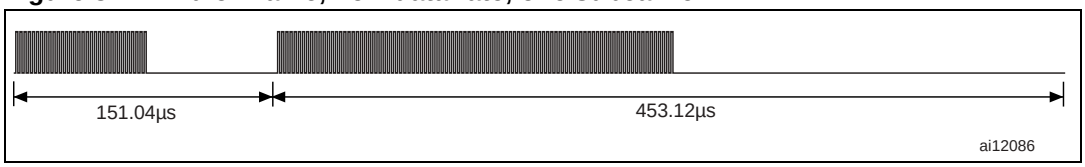

For the Fast commands, the EOF comprises a logic 0 that includes 16 pulses at 423.75 kHz and an unmodulated time of 37.76 µs, followed by 48 pulses at 423.75 kHz (f_C/32) and an unmodulated time of 113.28 µs as shown in *Figure 33*.

Figure 33. End of frame, Low data rate, one subcarrier x2

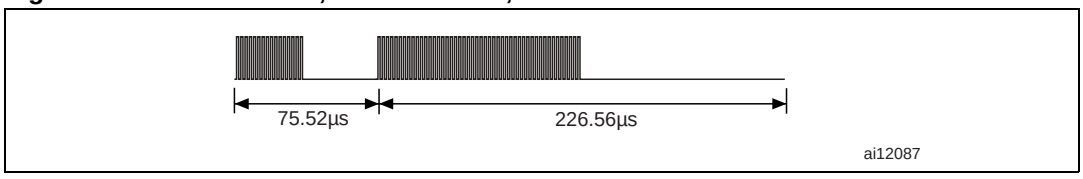

6.4 EOF when using two subcarriers

6.4.1 High data rate

The EOF comprises a logic 0 that includes 8 pulses at 423.75 kHz and 9 pulses at 484.28 kHz, followed by 24 pulses at 423.75 kHz (f_C/32) and 27 pulses at 484.28 kHz (f_C/28) as shown in *Figure 34*.

For the Fast commands, the x2 mode is not available.

Figure 34. End of frame, High data rate, two subcarriers

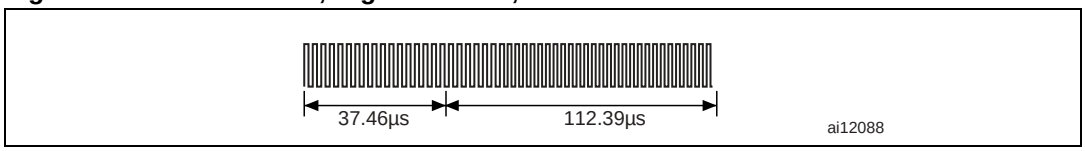

6.4.2 Low data rate

The EOF comprises a logic 0 that includes 32 pulses at 423.75 kHz and 36 pulses at 484.28 kHz, followed by 96 pulses at 423.75 kHz (f_C/32) and 108 pulses at 484.28 kHz (f_C/28) as shown in *Figure 35*

For the fast commands, the x2 mode is not available.

Figure 35. End of frame, Low data rate, two subcarriers

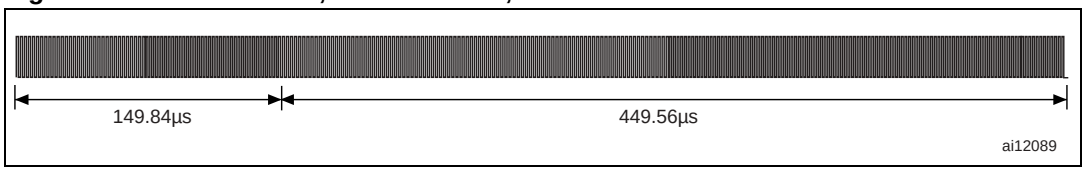

7 Unique identifier (UID)

The LRI2Ks are uniquely identified by a 64-bit Unique Identifier (UID). This UID complies with ISO/IEC 15963 and ISO/IEC 7816-6. The UID is a read-only code, and comprises:

- the 8 MSBs are E0h
- the IC Manufacturer code of ST 02h, on 8 bits (ISO/IEC 7816-6/AM1)
- a Unique Serial Number on 48 bits.

Table 5. UID format

MSB		LSB
63 56	55 48	47 0
E0h	02h	Unique serial number

With the UID each LRI2K can be addressed uniquely and individually during the anti-collision loop and for one-to-one exchanges between a VCD and an LRI2K.

8 Application family identifier (AFI)

The AFI (Application Family Identifier) represents the type of application targeted by the VCD and is used to identify, among all the LRI2Ks present, only the LRI2Ks that meet the required application criteria.

Figure 36. LRI2K decision tree for AFI

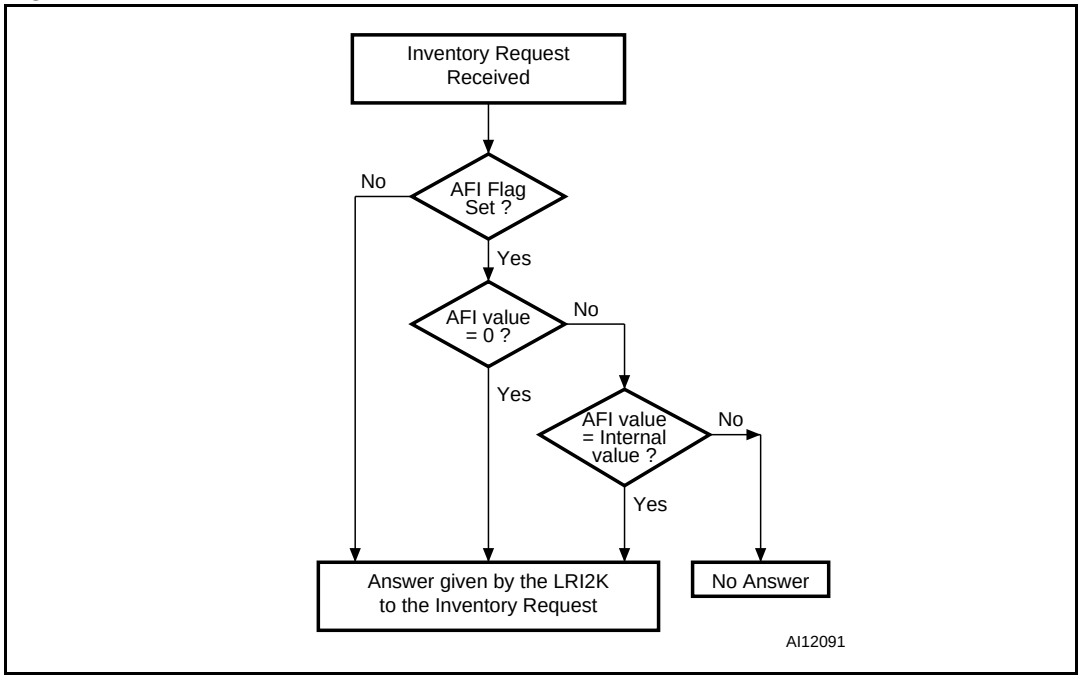

The AFI is programmed by the LRI2K issuer (or purchaser) in the AFI register. Once programmed and Locked, it can no longer be modified.

The most significant nibble of the AFI is used to code one specific or all application families.

The least significant nibble of the AFI is used to code one specific or all application subfamilies. Sub-family codes different from 0 are proprietary.

(See ISO 15693-3 documentation)

9 Data storage format identifier (DSFID)

The Data Storage Format IDentifier indicates how the data is structured in the LRI2K memory. The logical organization of data can be known instantly using the DSFID.

It can be programmed and locked using the Write DSFID and Lock DSFID commands, respectively. It is coded on one byte.

9.1 CRC

The CRC used in the LRI2K is calculated as per the definition in ISO/IEC 13239.

The initial register contents are all ones: "FFFF".

The two-byte CRC is appended to each request and response, within each frame, before the EOF. The CRC is calculated on all the bytes between the SOF and the CRC field.

Upon reception of a request from the VCD, the LRI2K verifies that the CRC value is valid. If it is invalid, the LRI2K discards the frame and does not answer to the VCD.

Upon reception of a response from the LRI2K, it is recommended that the VCD verifies whether the CRC value is valid. If it is invalid, actions to be performed are left to the discretion of the VCD designers.

The CRC is transmitted least significant byte first.

Each byte is transmitted least significant bit first.

Table 6. CRC transmission rules

LSByte		MSByte	
LSBit	**MSBit**	**LSBit**	**MSBit**
CRC 16 (8bits)		CRC 16 (8 bits)	

10 LRI2K protocol description

The transmission protocol (or simply protocol) defines the mechanism used to exchange instructions and data between the VCD and the LRI2K, in both directions. It is based on the concept of "VCD talks first".

This means that an LRI2K will not start transmitting unless it has received and properly decoded an instruction sent by the VCD. The protocol is based on an exchange of:

- a request from the VCD to the LRI2K
- a response from the LRI2K to the VCD

Each request and each response are contained in a frame. The frame delimiters (SOF, EOF) are described in *Section 6: LRI2K to VCD frames*.

Each request consists of:

- a request SOF (see *Figure 9* and *Figure 10*)
- flags
- a command code
- parameters, depending on the command
- application data
- a 2-byte CRC
- a request EOF (see *Figure 11*)

Each response consists of:

- an answer SOF (see *Figure 24* to *Figure 29*)
- flags
- parameters, depending on the command
- application data
- a 2-byte CRC
- an Answer EOF (see *Figure 30* to *Figure 35*)

The protocol is bit-oriented. The number of bits transmitted in a frame is a multiple of eight (8), i.e. an integer number of bytes.

A single-byte field is transmitted least significant bit (LSBit) first. A multiple-byte field is transmitted least significant byte (LSByte) first, with each byte transmitted least significant bit (LSBit) first.

The setting of the flags indicates the presence of the optional fields. When the flag is set (to one), the field is present. When the flag is reset (to zero), the field is absent.

Table 7. VCD request frame format

Request SOF	Request Flags	Command code	Parameters	Data	2 byte CRC	Request EOF

Table 8. LRI2K response frame format

Response SOF	Response Flags	Parameters	Data	2 byte CRC	Response EOF

Figure 37. LRI2K protocol timing

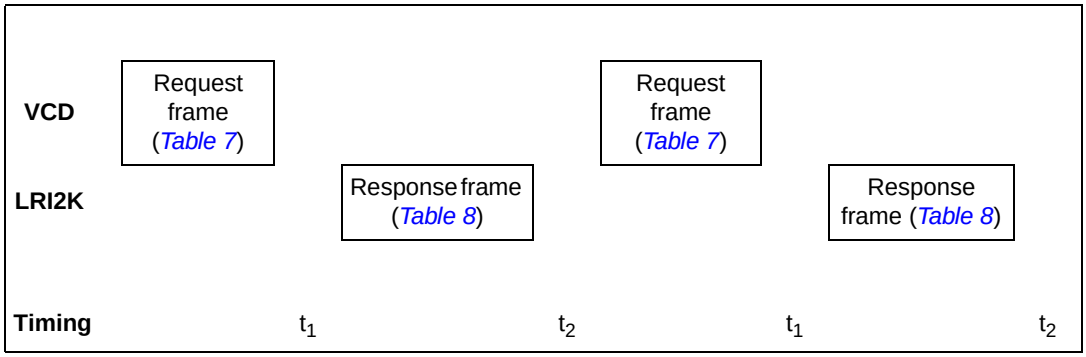

11 LRI2K states

An LRI2K can be in one of 4 states:

- Power-off
- Ready
- Quiet
- Selected

Transitions between these states are specified in *Figure 38: LRI2K state transition diagram* and *Table 9: LRI2K response depending on request flags*.

11.1 Power-off state

The LRI2K is in the Power-off state when it does not receive enough energy from the VCD.

11.2 Ready state

The LRI2K is in the Ready state when it receives enough energy from the VCD. When in the Ready state, the LRI2K answers any request where the Select_Flag is not set.

11.3 Quiet state

When in the Quiet State, the LRI2K answers any request except for Inventory requests with the Address_Flag set.

11.4 Selected state

In the Selected State, the LRI2K answers any request in all modes (see *Section 12: Modes*):

- request in Select mode with the Select flag set
- request in Addressed mode if the UID matches
- request in Non-Addressed mode as it is the mode for general requests

Table 9. LRI2K response depending on request flags

Flags	Address_Flag		Select_Flag	
	1 Addressed	0 Non addressed	1 Selected	0 Non selected
LRI2K in Ready or Selected state (Devices in Quiet state don't answer)		X		X
LRI2K in Selected state		X	X	
LRI2K in Ready, Quiet or Selected state (the device which match the UID)	X			X
Error (03h)	X		X	

Figure 38. LRI2K state transition diagram

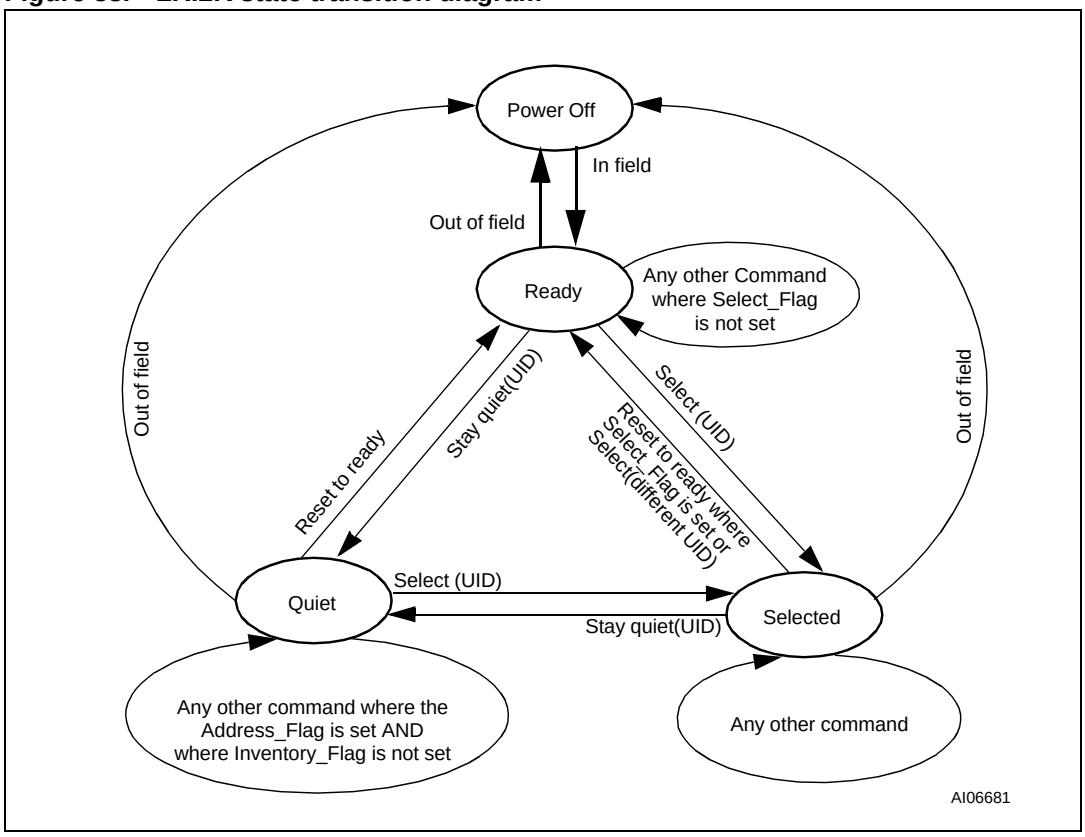

1. The intention of the state transition method is that only one LRI2K should be in the selected state at a time.

12 Modes

The term “mode” refers to the mechanism used in a request to specify the set of LRI2Ks that will answer the request.

12.1 Addressed mode

When the Address_flag is set to 1 (Addressed mode), the request contains the Unique ID (UID) of the addressed LRI2K.

Any LRI2K that receives a request with the Address_flag set to 1 compares the received Unique ID to its own. If it matches, then the LRI2K executes the request (if possible) and returns a response to the VCD as specified in the command description.

If its UID does not match, then it remains silent.

12.2 Non-Addressed mode (general request)

When the Address_flag is set to 0 (Non-Addressed mode), the request does not contain a Unique ID. Any LRI2K receiving a request with the Address_flag set to 0 executes it and returns a response to the VCD as specified in the command description.

12.3 Select mode

When the Select_flag is set to 1 (Select mode), the request does not contain an LRI2K Unique ID. The LRI2K in the Selected state that receives a request with the Select_flag set to 1 executes it and returns a response to the VCD as specified in the command description.

Only LRI2Ks in the Selected state answer to a request where the Select Flag is set to 1.

The system design ensures in theory that only one LRI2K can be in the Select state at a time.

13 Request format

The request consists of:

- an SOF
- flags
- a command code
- parameters and data
- a CRC
- an EOF

Table 10. General request format

SOF	Request flags	Command code	Parameters	Data	CRC	EOF

13.1 Request flags

In a request, the "flags" field specifies the actions to be performed by the LRI2K and whether corresponding fields are present or not.

The flags field consists of eight bits.

The bit 3 (Inventory_flag) of the request flag defines the contents of the 4 MSBs (bits 5 to 8).

When bit 3 is reset (0), bits 5 to 8 define the LRI2K selection criteria.

When bit 3 is set (1), bits 5 to 8 define the LRI2K Inventory parameters.

Table 11. Definitions of request flags 1 to 4

Bit No	Flag	Level	Description
Bit 1	Subcarrier_flag(1)	0	A single subcarrier frequency is used by the LRI2K
		1	Two subcarriers are used by the LRI2K
Bit 2	Data_rate_flag(2)	0	Low data rate is used
		1	High data rate is used
Bit 3	Inventory flag	0	The meaning of Flags 5 to 8 is described in *Table 12*
		1	The meaning of Flags 5 to 8 is described in *Table 13*
Bit 4	Protocol Extension flag	0	No Protocol format extension

1. *Subcarrier_flag refers to the* LRI2K-*to-VCD communication.*
2. *Data_rate_flag refers to the* LRI2K-*to-VCD communication*

Table 12. Request flags 5 to 8 when bit 3 = 0

Bit No	Flag	Level	Description
Bit 5	Select_flag(1)	0	Request is executed by any LRI2K according to the setting of Address_flag
		1	Request is executed only by the LRI2K in Selected state
Bit 6	Address_flag(1)	0	Request is not addressed. UID field is not present. The request is executed by all LRI2Ks.
		1	Request is addressed. UID field is present. The request is executed only by the LRI2K whose UID matches the UID specified in the request.
Bit 7	Option flag	0	
Bit 8	RFU	0	

1. If the Select_flag is set to 1, the Address_flag is set to 0 and the UID field is not present in the request.

Table 13. Request flags 5 to 8 when bit 3 = 1

Bit No	Flag	Level	Description
Bit 5	AFI flag	0	AFI field is not present
		1	AFI field is present
Bit 6	Nb_slots flag	0	16 slots
		1	1 slot
Bit 7	Option flag	0	
Bit 8	RFU	0	

14 Response format

The response consists of:

- an SOF
- flags
- parameters and data
- a CRC
- an EOF

Table 14. General response format

SOF	Response Flags	Parameters	Data	CRC	EOF

14.1 Response flags

In a response, the flags indicate how actions have been performed by the LRI2K and whether corresponding fields are present or not. The response flags consist of eight bits.

Table 15. Definitions of response flags 1 to 8

Bit No.	Flag	Level	Description
Bit 1	Error_Flag	0	No error
		1	Error detected. Error code is in the "Error" field.
Bit 2	RFU	0	
Bit 3	RFU	0	
Bit 4	Extension flag	0	No extension
Bit 5	RFU	0	
Bit 6	RFU	0	
Bit 7	RFU	0	
Bit 8	RFU	0	

14.2 Response error code

If the Error_Flag is set by the LRI2K in the response, the Error Code field is present and provides information about the error that occurred.

Error codes not specified in *Table 16* are reserved for future use.

Table 16. Response error code definition

Error code	Meaning
03h	The command option is not supported
0F	Error with no information given or a specific error code is not supported.
10h	The specified block is not available (does not exist).
11h	The specified block is already locked and thus cannot be locked again
12h	The specified block is locked and its contents cannot be changed.
13h	The specified block was not successfully programmed.
14h	The specified block was not successfully locked.

15 Anti-collision

The purpose of the anti-collision sequence is to inventory the LRI2Ks present in the VCD field using their unique ID (UID).

The VCD is the master of communications with one or several LRI2Ks. It initiates LRI2K communication by issuing the Inventory request.

The LRI2K sends its response in the determined slot or does not respond.

15.1 Request parameters

When issuing the Inventory command, the VCD:

- sets the Nb_slots_flag as desired,
- adds the Mask Length and the Mask Value after the Command Field,

The Mask Length is the number of significant bits of the Mask Value.

The Mask Value is contained in an integer number of bytes. The Mask Length indicates the number of significant bits. The LSB is transmitted first.

If the Mask Length is not a multiple of 8 (bits), as many 0-bits as required will be added to the Mask Value MSB so that the Mask Value is contained in an integer number of bytes.

The next field starts on the next byte boundary.

Table 17. Inventory request format

MSB LSB

SOF	Request_ flags	Command	Optional AFI	Mask length	Mask value	CRC	EOF
	8 bits	8 bits	8 bits	8 bits	0 to 8 bytes	16 bits	

In the example of *Table 18* and *Figure 39*, the Mask Length is 11 bits. Five 0-bits are added to the Mask Value MSB. The 11-bit Mask and the current slot number are compared to the UID.

Table 18. Example of the addition of 0-bits to an 11-bit mask value

(b_{15}) MSB	**LSB (b_0)**
0000 0	100 1100 1111
0-bits added	11-bit Mask Value

Figure 39. Principle of comparison between the mask, the slot number and the UID

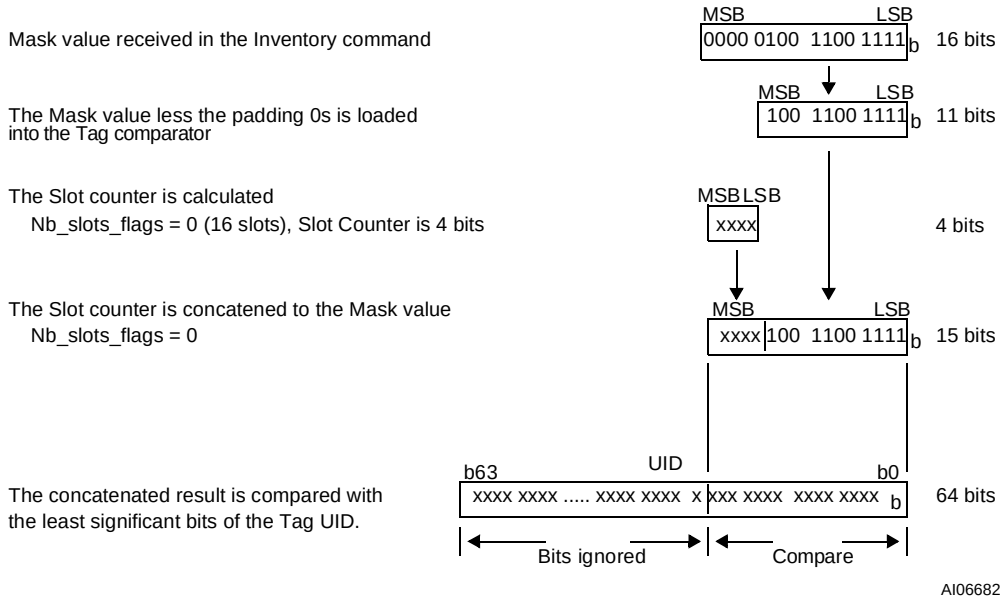

The AFI field is present if the AFI_flag is set.

The pulse is generated according to the definition of the EOF in ISO/IEC 15693-2.

The first slot starts immediately after the reception of the request EOF. To switch to the next slot, the VCD sends an EOF.

The following rules and restrictions apply:

- if no LRI2K answer is detected, the VCD may switch to the next slot by sending an EOF,
- if one or more LRI2K answers are detected, the VCD waits until the complete frame has been received before sending an EOF for switching to the next slot.

16 Request processing by the LRI2K

Upon reception of a valid request, the LRI2K performs the following algorithm:

- NbS is the total number of slots (1 or 16)
- SN is the current slot number (0 to 15)
- LSB (value, n) function returns the n Less Significant Bits of value
- MSB (value, n) function returns the n Most Significant Bits of value
- "&" is the concatenation operator
- Slot_Frame is either an SOF or an EOF

```
SN = 0
if (Nb_slots_flag)
   then NbS = 1
        SN_length = 0
        endif
   else NbS = 16
        SN_length = 4
        endif

label1:
if LSB(UID, SN_length + Mask_length) =
  LSB(SN,SN_length)&LSB(Mask,Mask_length)
   then answer to inventory request
        endif

wait (Slot_Frame)

if Slot_Frame = SOF
   then Stop Anticollision
        decode/process request
        exit
        endif

if Slot_Frame = EOF
   if SN < NbS-1
     then SN = SN + 1
          goto label1
          exit
          endif
   endif
```

17 Explanation of the possible cases

Figure 40 summarizes the main possible cases that can occur during an anti-collision sequence when the slot number is 16.

The different steps are:

- The VCD sends an Inventory request, in a frame terminated by an EOF. The number of slots is 16.
- LRI2K 1 transmits its response in Slot 0. It is the only one to do so, therefore no collision occurs and its UID is received and registered by the VCD;
- The VCD sends an EOF in order to switch to the next slot.
- In slot 1, two LRI2Ks, LRI2K 2 and LRI2K 3 transmit a response, thus generating a collision. The VCD records the event and remembers that a collision was detected in Slot 1.
- The VCD sends an EOF in order to switch to the next slot.
- In Slot 2, no LRI2K transmits a response. Therefore the VCD does not detect any LRI2K SOF and decides to switch to the next slot by sending an EOF.
- In slot 3, there is another collision caused by responses from LRI2K 4 and LRI2K 5
- The VCD then decides to send a request (for instance a Read Block) to LRI2K 1 whose UID has already been correctly received.
- All LRI2Ks detect an SOF and exit the anti-collision sequence. They process this request and since the request is addressed to LRI2K 1, only LRI2K 1 transmits a response.
- All LRI2Ks are ready to receive another request. If it is an Inventory command, the slot numbering sequence restarts from 0.

Note: The decision to interrupt the anti-collision sequence is made by the VCD. It could have continued to send EOFs until Slot 16 and only then sent the request to LRI2K 1.

Figure 40. Description of a possible anti-collision sequence

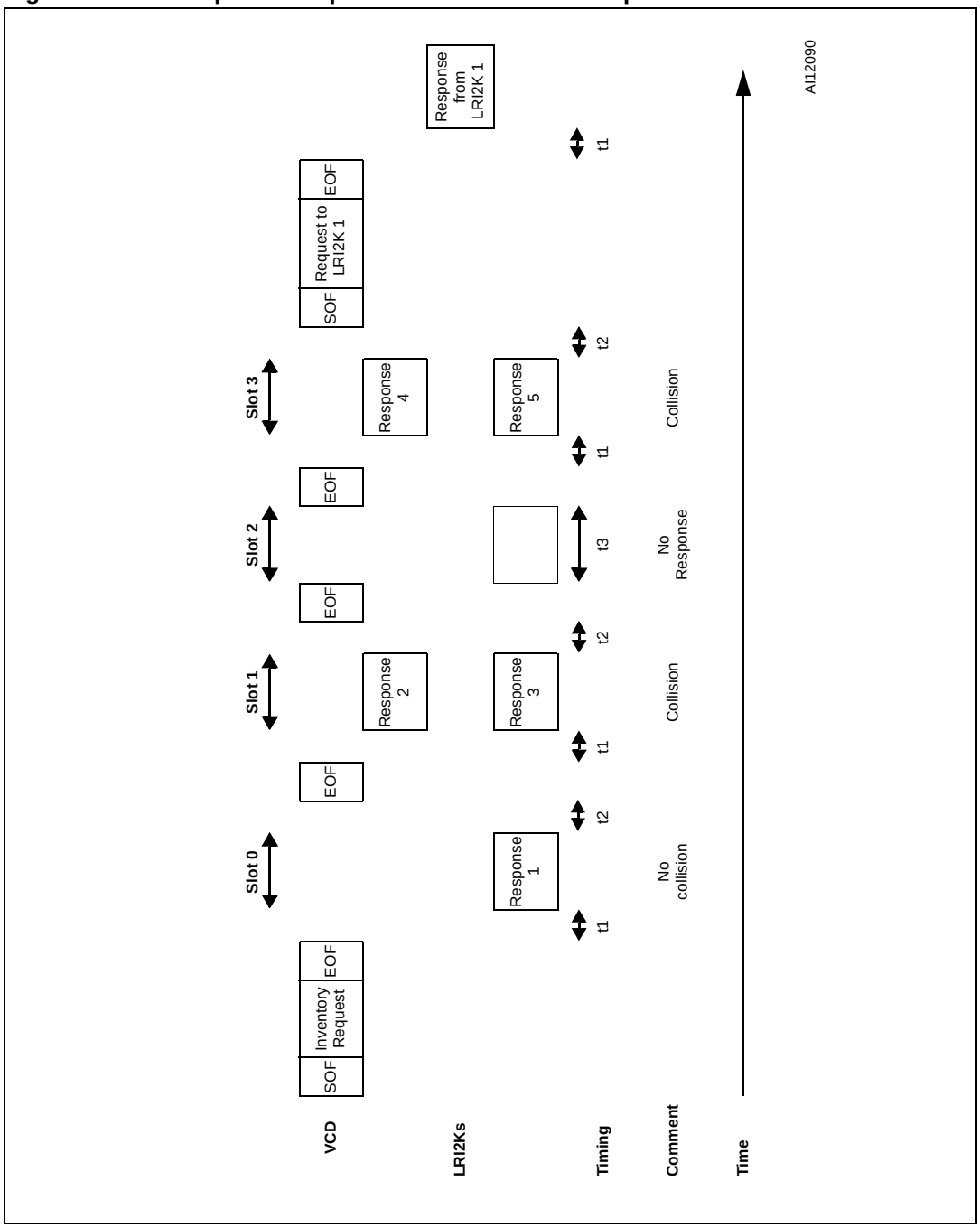

18 Inventory Initiated command

The LRI2K provides a special feature to improve the inventory time response of moving tags using the Initiate_Flag value. This flag, controlled by the Initiate command, allows tags to answer to Inventory Initiated commands.

For applications in which multiple tags are moving in front of a reader, it is possible to miss tags using the standard inventory command. The reason is that the inventory sequence has to be performed on a global tree search. For example, a tag with a particular UID value may have to wait the run of a long tree search before being inventoried. If the delay is too long, the tag may be out of the field before it has been detected.

Using the Initiate command, the inventory sequence is optimized. When multiple tags are moving in front of a reader, the ones which are within the reader field will be initiated by the Initiate command. In this case, a small batch of tags will answer to the Inventory Initiated command which will optimize the time necessary to identify all the tags. When finished, the reader has to issue a new Initiate command in order to initiate a new small batch of tags which are new inside the reader field.

It is also possible to reduce the inventory sequence time using the Fast Initiate and Fast Inventory Initiated commands. These commands allow the LRI2Ks to increase their response data rate by a factor of 2, up to 53kbit/s.

19 Timing definition

19.1 t_1: LRI2K response delay

Upon detection of the rising edge of the EOF received from the VCD, the LRI2K waits for a time t_{1nom} before transmitting its response to a VCD request or before switching to the next slot during an inventory process. Values of t_1 are given in *Table 19*. The EOF is defined in *Figure 11 on page 18*.

19.2 t_2: VCD new request delay

t_2 is the time after which the VCD may send an EOF to switch to the next slot when one or more LRI2K responses have been received during an Inventory command. It starts from the reception of the EOF from the LRI2Ks.

The EOF sent by the VCD may be either 10% or 100% modulated regardless of the modulation index used for transmitting the VCD request to the LRI2K.

t_2 is also the time after which the VCD may send a new request to the LRI2K as described in *Table 37: LRI2K protocol timing*.

Values of t_2 are given in *Table 19*.

19.3 t_3: VCD new request delay in the absence of a response from the LRI2K

t_3 is the time after which the VCD may send an EOF to switch to the next slot when no LRI2K response has been received.

The EOF sent by the VCD may be either 10% or 100% modulated regardless of the modulation index used for transmitting the VCD request to the LRI2K.

From the time the VCD has generated the rising edge of an EOF:

- If this EOF is 100% modulated, the VCD waits a time at least equal to t_{3min} before sending a new EOF.
- If this EOF is 10% modulated, the VCD waits a time at least equal to the sum of t_{3min} + the LRI2K nominal response time (which depends on the LRI2K data rate and subcarrier modulation mode) before sending a new EOF.

Table 19. Timing values(1)

	Minimum (min) values	Nominal (nom) values	Maximum (max) values
t_1	318.6 µs	320.9 µs	323.3 µs
t_2	309.2 µs	No $\mathbf{t_{nom}}$	No $\mathbf{t_{max}}$
t_3	t_{1max}(2) + t_{SOF}(3)	No $\mathbf{t_{nom}}$	No $\mathbf{t_{max}}$

1. *The tolerance of specific timings is ± 32/f_C.*
2. t_{1max} does not apply for write alike requests. Timing conditions for write alike requests are defined in the command description.
3. t_{SOF} is the time taken by the LRI2K to transmit an SOF to the VCD. t_{SOF} depends on the current data rate: High data rate or Low data rate.

20 Commands codes

The LRI2K supports the commands described in this section. Their codes are given in *Table 20*.

Table 20. Command codes

Command code standard	Function
01h	Inventory
02h	Stay Quiet
20h	Read Single Block
21h	Write Single Block
22h	Lock Block
23h	Read Multiple Block
25h	Select
26h	Reset to Ready
27h	Write AFI
28h	Lock AFI
29h	Write DSFID
2Ah	Lock DSFID
2Bh	Get System Info
2Ch	Get Multiple Block Security Status

Command code custom	Function
A6h	Kill
B1h	Write Kill
B2h	Lock Kill
C0h	Fast Read Single Block
C1h	Fast Inventory Initiated
C2h	Fast Initiate
C3h	Fast Read Multiple Block
D1h	Inventory Initiated
D2h	Initiate

20.1 Inventory

When receiving the Inventory request, the LRI2K runs the anti-collision sequence. The Inventory_flag is set to 1. The meaning of flags 5 to 8 is shown in *Table 13: Request flags 5 to 8 when bit 3 = 1*.

The request contains:

- the flags,
- the Inventory command code (see *Table 20: Command codes*)
- the AFI if the AFI flag is set
- the Mask Length
- the Mask Value
- the CRC

The LRI2K does not generate any answer in case of error.

Table 21. Inventory request format

Request SOF	Request flags	Inventory	Optional AFI	Mask length	Mask value	CRC16	Request EOF
	8 bits	01h	8 bits	8 bits	0 - 64 bits	16 bits	

The response contains:

- the flags
- the Unique ID

Table 22. Inventory response format

Response SOF	Response flags	DSFID	UID	CRC16	Response EOF
	8 bits	8 bits	64 bits	16 bits	

During an Inventory process, if the VCD does not receive an RF LRI2K response, it waits a time t_3 before sending an EOF to switch to the next slot. t_3 starts from the rising edge of the request EOF sent by the VCD.

- If the VCD sends a 100% modulated EOF, the minimum value of t_3 is:
  $t_3 min = 4384/f_C$ (323.3µs) + t_{SOF}
- If the VCD sends a 10% modulated EOF, the minimum value of t_3 is:
  $t_3 min = 4384/f_C$ (323.3µs) + t_{NRT}

where:

- t_{SOF} is the time required by the LRI2K to transmit an SOF to the VCD
- t_{NRT} is the nominal response time of the LRI2K

t_{NRT} and t_{SOF} are dependent on the LRI2K-to-VCD data rate and subcarrier modulation mode.

20.2 Stay Quiet

On receiving the Stay Quiet command, the LRI2K enters the Quiet State and does NOT send back a response. There is NO response to the Stay Quiet command even if an error occurs.

When in the Quiet state:

- the LRI2K does not process any request if the Inventory_flag is set,
- the LRI2K processes any Addressed request

The LRI2K exits the Quiet State when:

- it is reset (power off),
- receiving a Select request. It then goes to the Selected state,
- receiving a Reset to Ready request. It then goes to the Ready state.

Table 23. Stay Quiet request format

Request SOF	Request flags	Stay Quiet	UID	CRC16	Request EOF
	8 bits	02h	64 bits	16 bits	

The Stay Quiet command must always be executed in the Addressed mode (Select_Flag is reset to 0 and Address_Flag is set to 1).

Figure 41. Stay Quiet frame exchange between VCD and LRI2K

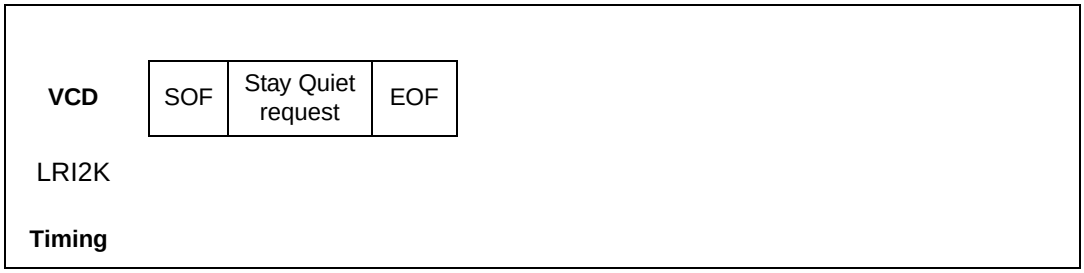

20.3 Read Single Block

On receiving the Read Single Block Command, the LRI2K reads the requested block and sends back its 32 bits value in the response. The Option_Flag is supported.

Table 24. Read Single Block request format

Request SOF	Request_flags	Read Single Block	UID	Block number	CRC16	Request EOF
	8 bits	20h	64 bits	8 bits	16 bits	

Request parameters:

- Option_Flag
- UID (Optional)
- Block Number

Table 25. Read Single Block response format when Error_Flag is NOT set

Response SOF	Response_ Flags	Block locking status	Data	CRC16	Response EOF
	8 bits	8 bits	32 bits	16 bits	

Response parameter:

- Block Locking Status if Option_Flag is set (see *Table 26: Block Locking status*)
- 4 bytes of Block Data

Table 26. Block Locking status

b_7	b_6	b_5	b_4	b_3	b_2	b_1	b_0
all 0							0: Current Block not locked 1: Current Block locked

Table 27. Read Single Block response format when Error_Flag is set

Response SOF	Response_ Flags	Error code	CRC16	Response EOF
	8 bits	8 bits	16 bits	

Response parameter:

- Error Code as Error_Flag is set:
  - 0Fh: other error
  - 10h: block address not available

Figure 42. READ Single Block frame exchange between VCD and LRI2K

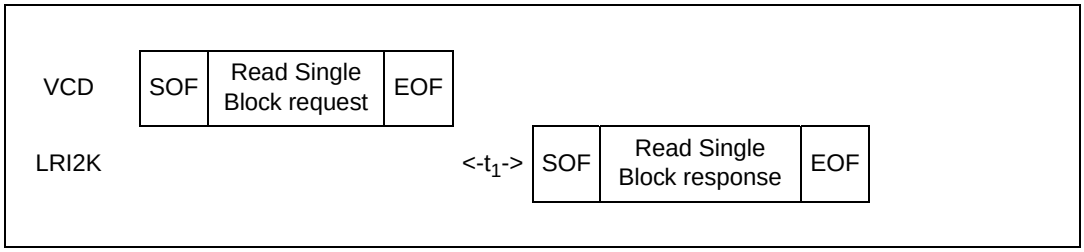

20.4 Write Single Block

On receiving the Write Single Block Command, the LRI2K writes the data contained in the request to the requested block and reports whether the write operation was successful in the response. The Option_Flag is supported.

During the write cycle t_W, there should be no modulation (neither 100% nor 10%). Otherwise, the LRI2K may not program correctly the data into the memory. The t_W time is equal to t_{1nom} + 18 × 302µs.

Table 28. Write Single Block request format

Request SOF	Request_ Flags	Write Single Block	UID	Block number	Data	CRC16	Request EOF
	8 bits	21h	64 bits	8 bits	32 bits	16 bits	

Request parameters:

- UID (Optional)
- Block Number
- Data

Table 29. Write Single Block response format when Error_Flag is NOT set

Response SOF	Response_Flags	CRC16	Response EOF
	8 bits	16 bits	

Response parameter:

- No parameter. The response is sent back after the write cycle.

Table 30. Write Single Block response format when Error_Flag is set

Response SOF	Response_Flags	Error code	CRC16	Response EOF
	8 bits	8 bits	16 bits	

Response parameter:

- Error Code as Error_Flag is set:
  - 10h: block address not available
  - 12h: block is locked
  - 13h: block not programmed

Figure 43. Write Single Block frame exchange between VCD and LRI2K

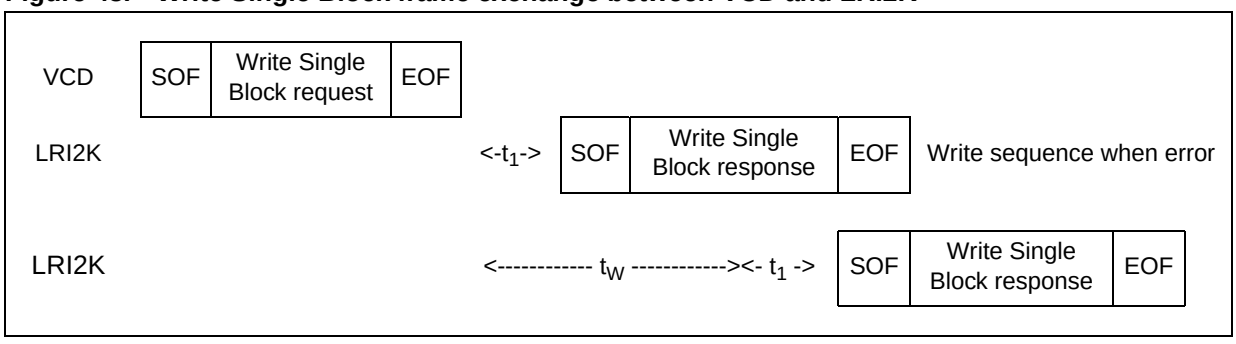

20.5 Lock Block

On receiving the Lock Block command, the LRI2K permanently locks the selected block. The Option_Flag is supported.

During the write cycle t_W, there should be no modulation (neither 100% nor 10%). Otherwise, the LRI2K may not lock correctly the memory block. The t_W time is equal to t_{1nom} + 18 × 302µs.

Table 31. Lock Single Block request format

Request SOF	Request_ Flags	Lock Block	UID	Block number	CRC16	Request EOF
	8 bits	22h	64 bits	8 bits	16 bits	

Request parameters:

- (Optional) UID
- Block Number

Table 32. Lock Block response format when Error_Flag is NOT set

Response SOF	Response_Flags	CRC16	Response EOF
	8 bits	16 bits	

Response parameter:

- No parameter.

Table 33. Lock Block response format when Error_Flag is set

Response SOF	Response_Flags	Error code	CRC16	Response EOF
	8 bits	8 bits	16 bits	

Response parameter:

- Error Code as Error_Flag is set:
  - 10h: block address not available
  - 11h: block is locked
  - 14h: block not locked

Figure 44. Lock Block frame exchange between VCD and LRI2K

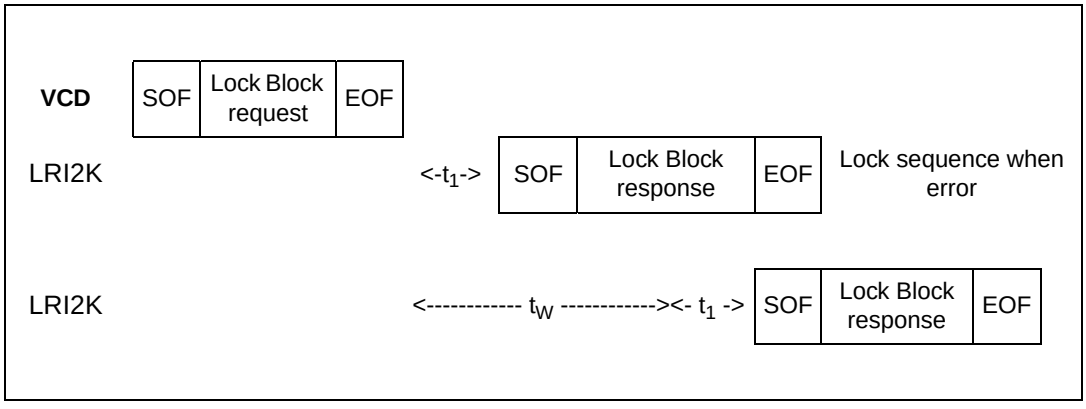

20.6 Read Multiple Block

When receiving the Read Multiple Block command, the LRI2K reads the selected blocks and sends back their value in multiples of 32 bits in the response. The blocks are numbered from '00 to '3F' in the request and the value is minus one (–1) in the field. For example, if the “number of blocks” field contains the value 06h, 7 blocks will be read. The maximum number of blocks is fixed at 64. During Sequential Block Read, when the block address reaches 64, it rolls over to 0. The Option_Flag is supported.

Table 34. Read Multiple Block request format

Request SOF	Request_ Flags	Read Multiple Block	UID	First block number	Number of blocks	CRC16	Request EOF
	8 bits	23h	64 bits	8 bits	8 bits	16 bits	

Request parameters:

- Option_Flag
- UID (Optional)
- First Block Number
- Number of Blocks

Table 35. Read Multiple Block response format when Error_Flag is NOT set

Response SOF	Response_ Flags	Block Locking Status	Data	CRC16	Response EOF
	8 bits	8 bits(1)	32 bits(1)	16 bits	

1. Repeated as needed.

Response parameter:

- Block Locking Status if Option_Flag is set (see *Table 36: Block Locking status*)
- N Blocks of Data

Table 36. Block Locking status

b_7	b_6	b_5	b_4	b_3	b_2	b_1	b_0
All 0							0: Current Block not locked 1: Current Block locked

Table 37. Read Multiple Block response format when Error_Flag is set

Response SOF	Response_Flags	Error code	CRC16	Response EOF
	8 bits	8 bits	16 bits	

Response parameter:

- Error Code as Error_Flag is set:
  - 0Fh: other error
  - 10h: block address not available

Figure 45. Read Multiple Block frame exchange between VCD and LRI2K

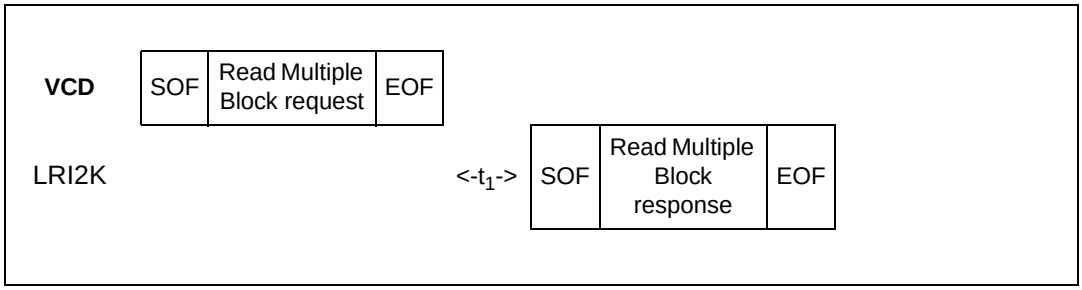

20.7 Select

When receiving the Select command:

- if the UID is equal to its own UID, the LRI2K enters or stays in the Selected state and sends a response.
- if the UID does not match its own, the selected LRI2K returns to the Ready state and does not send a response.

The LRI2K answers an error code only if the UID is equal to its own UID. If not, no response is generated.

Table 38. Select request format

Request SOF	Request_ Flags	Select	UID	CRC16	Request EOF
	8 bits	25h	64 bits	16 bits	

Request parameter:

- UID

Table 39. Select Block response format when Error_Flag is NOT set

Response SOF	Response_Flags	CRC16	Response EOF
	8 bits	16 bits	

Response parameter:

- No parameter.

Table 40. Select response format when Error_Flag is set

Response SOF	Response_Flags	Error code	CRC16	Response EOF
	8 bits	8 bits	16 bits	

Response parameter:

- Error Code as Error_Flag is set:
  - 0Fh: other error

Figure 46. Select frame exchange between VCD and LRI2K

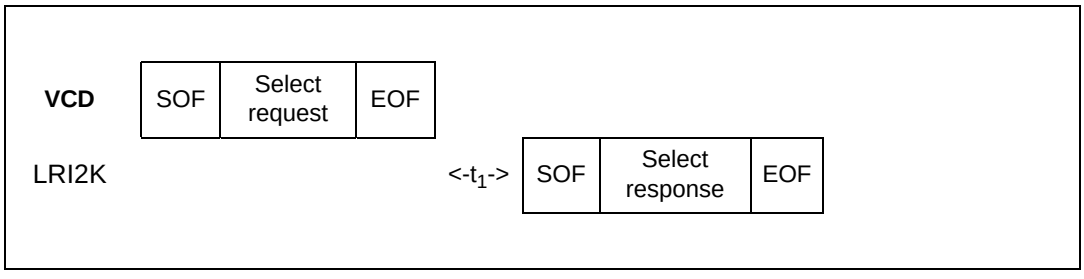

20.8 Reset to Ready

On receiving a Reset to Ready command, the LRI2K returns to the Ready state. In the Addressed mode, the LRI2K answers an error code only if the UID is equal to its own UID. If not, no response is generated.

Table 41. Reset to Ready request format

Request SOF	Request_ Flags	Reset to Ready	UID	CRC16	Request EOF
	8 bits	26h	64 bits	16 bits	

Request parameter:

- UID (Optional)

Table 42. Reset to Ready response format when Error_Flag is NOT set

Response SOF	Response_Flags	CRC16	Response EOF
	8 bits	16 bits	

Response parameter:

- No parameter.

Table 43. Reset to ready response format when Error_Flag is set

Response SOF	Response_ Flags	Error code	CRC16	Response EOF
	8 bits	8 bits	16 bits	

Response parameter:

- Error Code as Error_Flag is set:
  - 0Fh: other error

Figure 47. Reset to Ready frame exchange between VCD and LRI2K

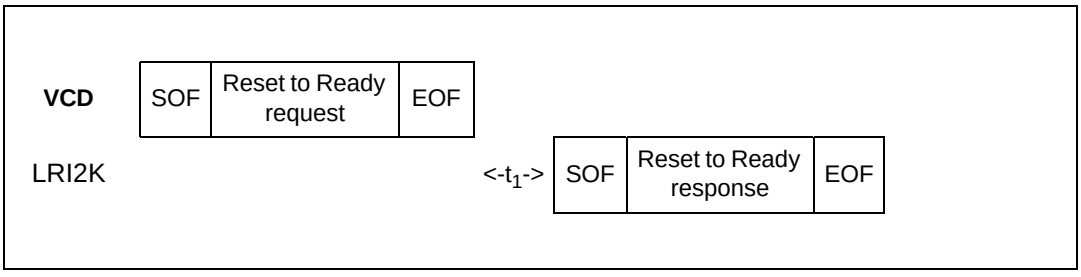

20.9 Write AFI

On receiving the Write AFI request, the LRI2K writes the AFI byte value into its memory. The Option_Flag is supported.

During the write cycle t_W, there should be no modulation (neither 100% nor 10%). Otherwise, the LRI2K may not write correctly the AFI value into the memory. The t_W time is equal to t_{1nom} + 18 × 302µs.

Table 44. Write AFI request format

Request SOF	Request _Flags	Write AFI	UID	AFI	CRC16	Request EOF
	8 bits	27h	64 bits	8 bits	16 bits	

Request parameters:

- UID (Optional)
- AFI

Table 45. Write AFI response format when Error_Flag is NOT set

Response SOF	Response_Flags	CRC16	Response EOF
	8 bits	16 bits	

Response parameter:

- No parameter.

Table 46. Write AFI response format when Error_Flag is set

Response SOF	Response_Flags	Error code	CRC16	Response EOF
	8 bits	8 bits	16 bits	

Response parameter:

- Error Code as Error_Flag is set:
  - 12h: block is locked
  - 13h: block not programmed

Figure 48. Write AFI frame exchange between VCD and LRI2K

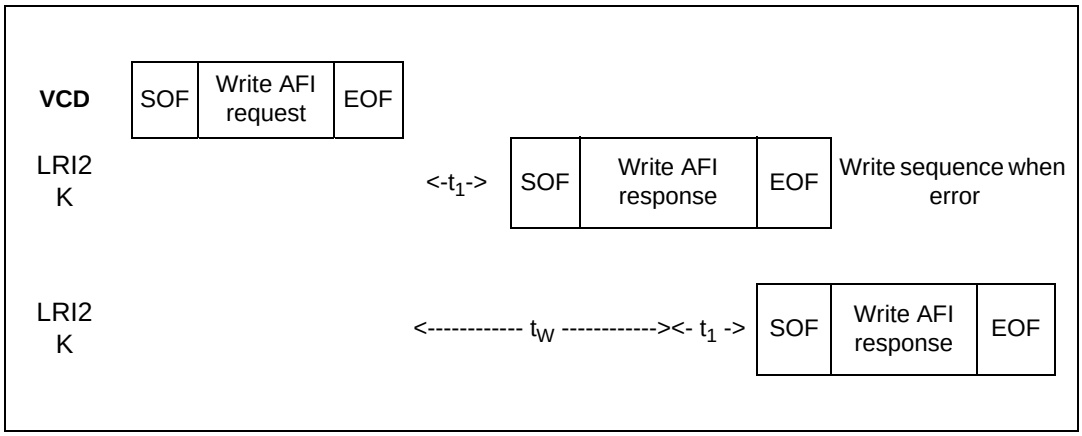

20.10 Lock AFI

On receiving the Lock AFI request, the LRI2K locks the AFI value permanently. The Option_Flag is supported.

During the write cycle t_W, there should be no modulation (neither 100% nor 10%). Otherwise, the LRI2K may not Lock correctly the AFI value in memory. The t_W time is equal to t_{1nom} + 18 × 302 µs.

Table 47. Lock AFI request format

Request SOF	Request_ Flags	Lock AFI	UID	CRC16	Request EOF
	8 bits	28h	64 bits	16 bits	

Request parameter:

- UID (Optional)

Table 48. Lock AFI response format when Error_Flag is NOT set

Response SOF	Response_Flags	CRC16	Response EOF
	8 bits	16 bits	

Response parameter:

- No parameter.

Table 49. Lock AFI response format when Error_Flag is set

Response SOF	Response_Flags	Error code	CRC16	Response EOF
	8 bits	8 bits	16 bits	

Response parameter:

- Error Code as Error_Flag is set:
  - 11h: block is locked
  - 14h: block not locked

Figure 49. Lock AFI frame exchange between VCD and LRI2K

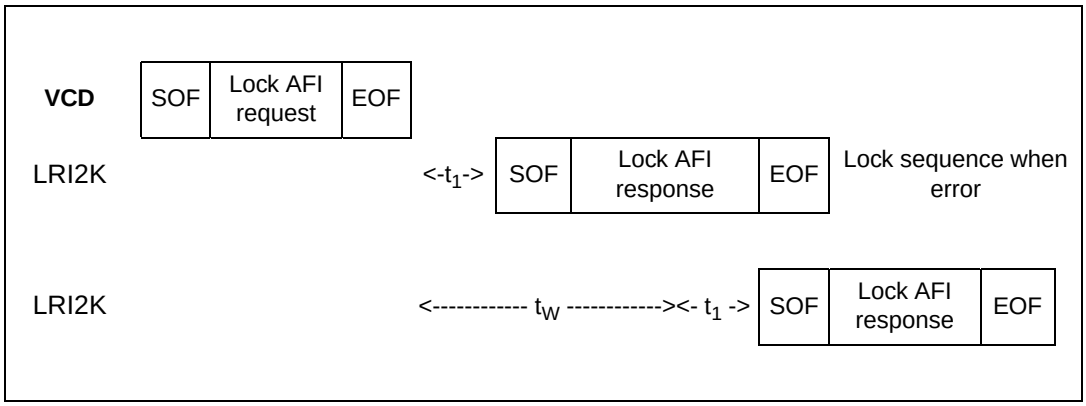

20.11 Write DSFID

On receiving the Write DSFID request, the LRI2K writes the DSFID byte value into its memory. The Option_Flag is supported.

During the write cycle t_W, there should be no modulation (neither 100% nor 10%). Otherwise, the LRI2K may not write correctly the DSFID value in memory. The t_W time is equal to t_{1nom} + 18 × 302µs.

Table 50. Write DSFID request format

Request SOF	Request_ Flags	Write DSFID	UID	DSFID	CRC16	Request EOF
	8 bits	29h	64 bits	8 bits	16 bits	

Request parameters:

- UID (Optional)
- DSFID

Table 51. Write DSFID response format when Error_Flag is NOT set

Response SOF	Response_Flags	CRC16	Response EOF
	8 bits	16 bits	

Response parameter:

- No parameter.

Table 52. Write DSFID response format when Error_Flag is set

Response SOF	Response_ Flags	Error code	CRC16	Response EOF
	8 bits	8 bits	16 bits	

Response parameter:

- Error Code as Error_Flag is set:
  - 12h: block is locked
  - 13h: block not programmed

Figure 50. Write DSFID frame exchange between VCD and LRI2K

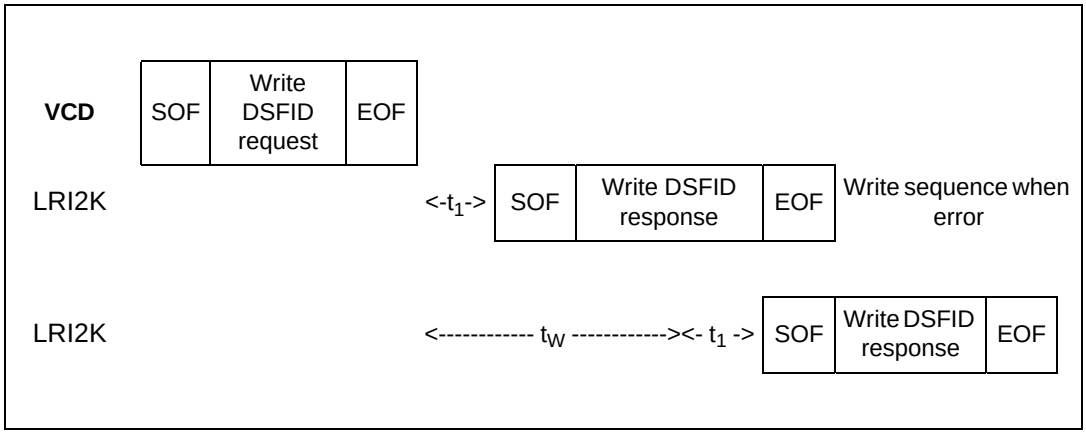

20.12 Lock DSFID

On receiving the Lock DSFID request, the LRI2K locks the DSFID value permanently. The Option_Flag is supported.

During the write cycle t_W, there should be no modulation (neither 100% nor 10%). Otherwise, the LRI2K may not lock correctly the DSFID value in memory. The t_W time is equal to t_{1nom} + 18 × 302µs.

Table 53. Lock DSFID request format

Request SOF	Request_ Flags	Lock DSFID	UID	CRC16	Request EOF
	8 bits	2Ah	64 bits	16 bits	

Request parameter:

- UID (Optional)

Table 54. Lock DSFID response format when Error_Flag is NOT set

Response SOF	Response_Flags	CRC16	Response EOF
	8 bits	16 bits	

Response parameter:

- No parameter.

Table 55. Lock DSFID response format when Error_Flag is set

Response SOF	Response_ Flags	Error code	CRC16	Response EOF
	8 bits	8 bits	16 bits	

Response parameter:

- Error Code as Error_Flag is set:
  - 11h: block is locked
  - 14h: block not locked

Figure 51. Lock DSFID frame exchange between VCD and LRI2K

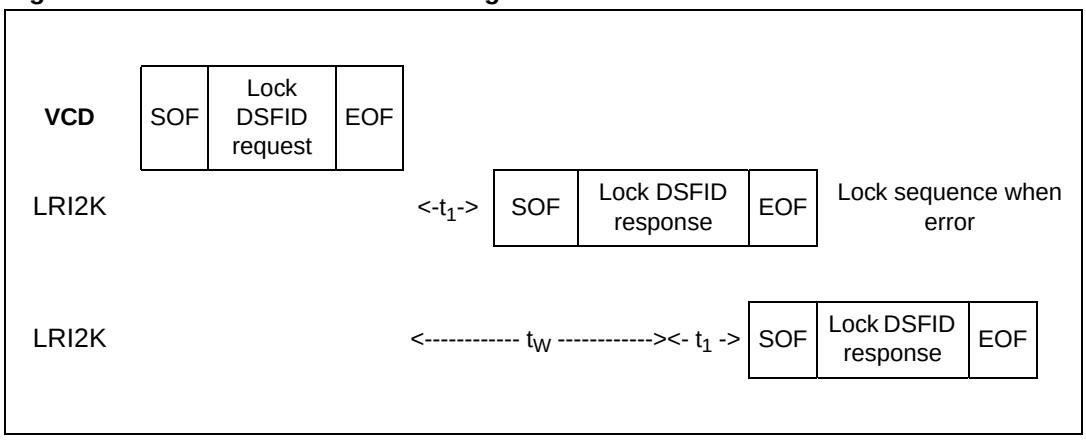

20.13 Get System Info

When receiving the Get System Info command, the LRI2K sends back its information data in the response.The Option_Flag is supported and must be reset to 0. The Get System Info can be issued in both Addressed and Non Addressed modes.

Table 56. Get System Info request format

Request SOF	Request_ Flags	Get System Info	UID	CRC16	Request EOF
	8 bits	2Bh	64 bits	16 bits	

Request parameter:

- UID (Optional)

Table 57. Get System Info response format when Error_Flag is NOT set

Response SOF	Response_ Flags	Information flags	UID	DSFID	AFI	Memory size	IC reference	CRC16	Response EOF
	00h	0Fh	64 bits	8 bits	8 bits	033Fh	$001000xx_b$	16 bits	

Response parameters:

- Information Flags set to 0Fh. DSFID, AFI, Memory Size and IC reference fields are present.
- UID code on 64 bits
- DSFID value
- AFI value
- memory size. The LRI2K provides 64 blocks (3Fh) of 4 bytes (03h).
- IC Reference. Only the 6 MSBs are significant. The product code of the LRI2K is $00\ 1000_b=8_d$

Table 58. Get System Info response format when Error_Flag is set

Response SOF	Response_Flags	Error code	CRC16	Response EOF
	01h	8 bits	16 bits	

Response parameter:

- Error Code as Error_Flag is set:
  - 03h: Option not supported
  - 0Fh: other error

Figure 52. Get System Info frame exchange between VCD and LRI2K

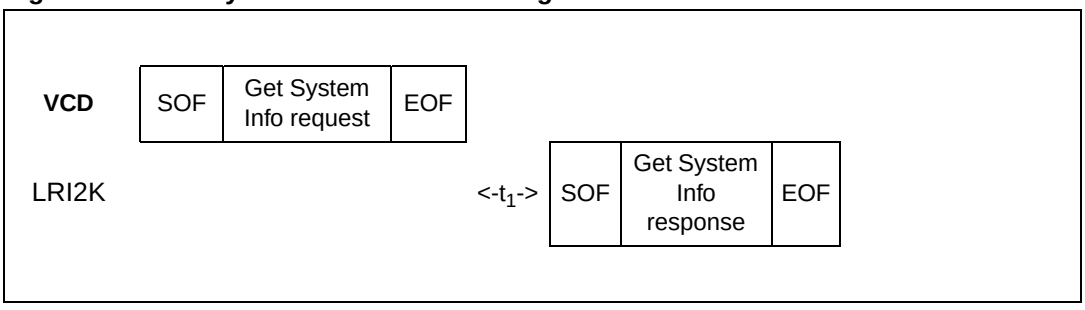

20.14 Get Multiple Block Security Status

When receiving the Get Multiple Block Security Status command, the LRI2K sends back the block security status. The blocks are numbered from '00 to '3F' in the request and the value is minus one (–1) in the field. For example, a value of '06' in the "Number of blocks" field requests to return the security status of 7 Blocks.

Table 59. Get Multiple Block Security Status request format

Request SOF	Request_ Flags	Get Multiple Block Security Status	UID	First block number	Number of blocks	CRC16	Request EOF
	8 bits	2Ch	64 bits	8 bits	8 bits	16 bits	

Request parameters:

- UID (Optional)
- first Block Number
- number of Blocks

Table 60. Get Multiple Block Security Status response format when Error_Flag is NOT set

Response SOF	Response_Flags	Block Locking Status	CRC16	Response EOF
	8 bits	8 bits(1)	16 bits	

1. Repeated as needed.

Response parameter:

- Block Locking Status if Option_Flag is set (see *Table 61: Block Locking status*)
- N Block of Data

Table 61. Block Locking status

b_7	b_6	b_5	b_4	b_3	b_2	b_1	b_0
All 0							0: Current block not locked 1: Current block locked

Table 62. Get Multiple Block Security Status response format when Error_Flag is set

Response SOF	Response_Flags	Error code	CRC16	Response EOF
	8 bits	8 bits	16 bits	

Response parameter:

- Error Code as Error_Flag is set:
  - 03h: Option not supported
  - 0Fh: other error

Figure 53. Get Multiple Block Security Status frame exchange between VCD and LRI2K

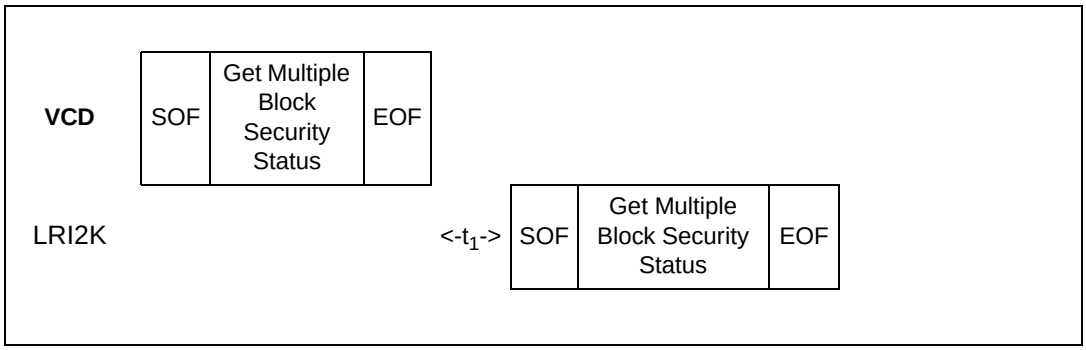

20.15 Kill

On receiving the Kill command, in the Addressed mode only, the LRI2K compares the kill code with the data contained in the request and reports whether the operation was successful in the response. The Option_Flag is supported. If the command is received in the Non Addressed or the Selected mode, the LRI2K returns an error response.

During the comparison cycle equal to t_W, there should be no modulation (neither 100% nor 10%). Otherwise, the LRI2K may not match the kill code correctly. The t_W time is equal to t_{1nom} + 18 × 302µs. After a successful Kill command, the LRI2K is deactivated and does not interpret any other command.

Table 63. Kill request format

Request SOF	Request_ Flags	Kill	IC Mfg code	UID	Kill access	Kill code	CRC16	Request EOF
	8 bits	A6h	02h	64 bits	00h	32 bits	16 bits	

Request parameters:

- UID (Optional)
- Kill Code

Table 64. Kill response format when Error_Flag is NOT set

Response SOF	Response_Flags	CRC16	Response EOF
	8 bits	16 bits	

Response parameter:

- No parameter. The response is send back after the writing cycle

Table 65. Kill response format when Error_Flag is set

Response SOF	Response_Flags	Error code	CRC16	Response EOF
	8 bits	8 bits	16 bits	

Response parameter:

- Error code as Error_Flag is set:
  - 0Fh: other error
  - 14h: block not locked

Figure 54. Kill frame exchange between VCD and LRI2K

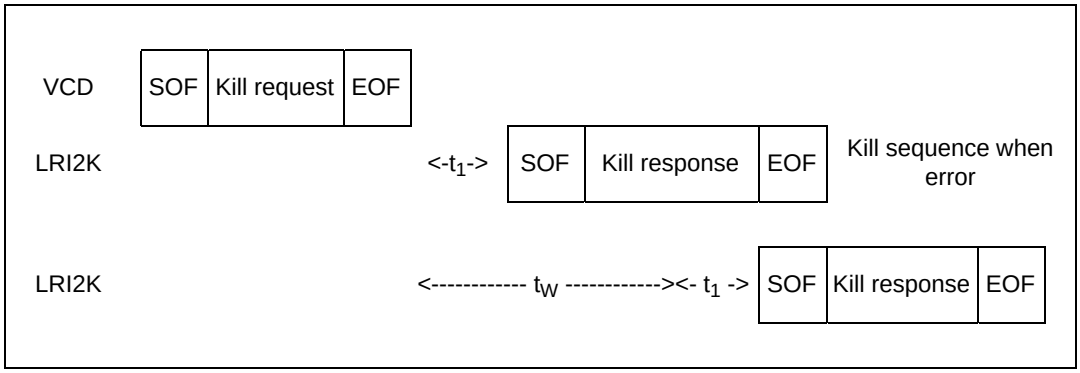

20.16 Write Kill

On receiving the Write Kill command, the LRI2K writes the kill code with the data contained in the request and reports whether the operation was successful in the response. The Option_Flag is supported. After a successful write, the kill code must be locked by a Lock Kill command to activate the protection.

During the write cycle t_W, there should be no modulation (neither 100% nor 10%). Otherwise, the LRI2K may not correctly program the data to the memory. The t_W time is equal to t_{1nom} + 18 × 302 µs.

Table 66. Write Kill request format

Request SOF	Request_ Flags	Write Kill	IC Mfg code	UID	Kill access	Kill code	CRC16	Request EOF
	8 bits	B1h	02h	64 bits	00h	32 bits	16 bits	

Request parameters:

- UID (Optional)
- Kill Address (00h = Kill, other = Error)
- Data

Table 67. Write Kill response format when Error_Flag is NOT set

Response SOF	Response_Flags	CRC16	Response EOF
	8 bits	16 bits	

No parameter. The response is send back after the write cycle.

Table 68. Write Kill response format when Error_Flag is set

Response SOF	Response_Flags	Error code	CRC16	Response EOF
	8 bits	8 bits	16 bits	

Response parameter:

- Error Code as Error_Flag is set:
  - 10h: block address not available
  - 12h: block is locked
  - 13h: block not programmed

Figure 55. Write Kill frame exchange between VCD and LRI2K

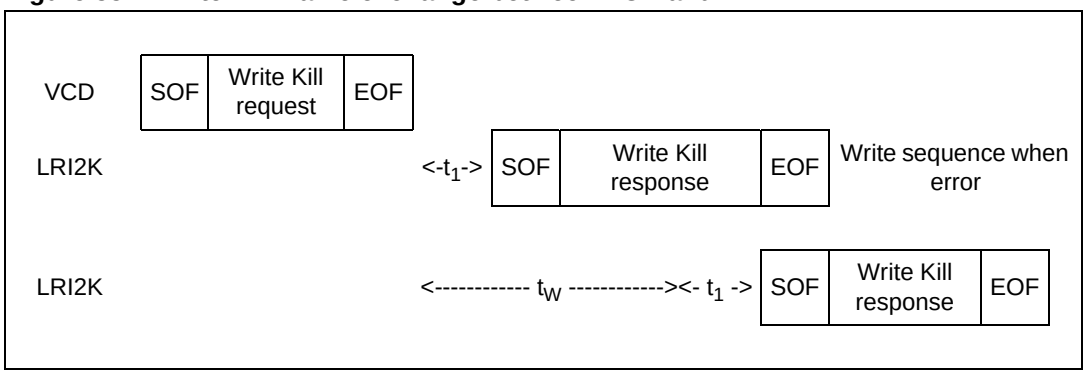

20.17 Lock Kill

On receiving the Lock Kill command, the LRI2K locks the Kill code permanently. The Option_Flag is supported. RFU bit 8 of the request flag must be set to '1'.

During the write cycle t_W, there should be no modulation (neither 100% nor 10%). Otherwise, the LRI2K may not lock the memory block correctly. The t_W time is equal to t_{1nom} + 18 × 302 µs.

Table 69. Lock Kill request format

Request SOF	Request_ Flags	Lock Kill	IC Mfg code	UID	Kill access	Protect Status	CRC16	Request EOF
	8 bits	B2h	02h	64 bits	00f	8 bits	16 bits	

Request parameters:

- (Optional) UID
- Kill Address (bit 8 = '1': 00h = KILL, other = Error)
- Protect Status (see table below)

b_7	b_6	b_5	b_4	b_3	b_2	b_1	b_0
0	0	0	0	0	0	0	1

Table 70. Lock Kill response format when Error_Flag is NOT set

Response SOF	Response_Flags	CRC16	Response EOF
	8 bits	16 bits	

Response parameter:

- No parameter.

Table 71. Lock Kill response format when Error_Flag is set

Response SOF	Response_Flags	Error code	CRC16	Response EOF
	8 bits	8 bits	16 bits	

Response parameter:

- Error Code as Error_Flag is set:
  - 10h: block address not available
  - 11h: block is locked
  - 14h: block not locked

Figure 56. Lock Kill frame exchange between VCD and LRI2K

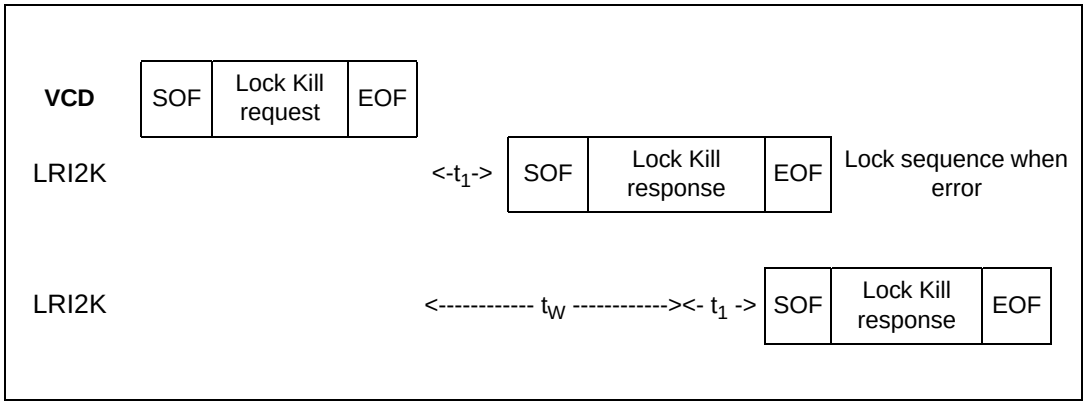

20.18 Fast Read Single Block

On receiving the Fast Read Single Block command, the LRI2K reads the requested block and sends back its 32-bit value in the response. The Option_Flag is supported. The data rate of the response is multiplied by 2.

Table 72. Fast Read Single Block request format

Request SOF	Request_ Flags	Fast Read Single Block	IC Mfg code	UID	Block number	CRC16	Request EOF
	8 bits	C0h	02h	64 bits	8 bits	16 bits	

Request parameters:

- Option_Flag
- UID (Optional)
- Block Number

Table 73. Fast Read Single Block response format when Error_Flag is NOT set

Response SOF	Response_ Flags	Block locking status	Data	CRC16	Response EOF
	8 bits	8 bits	32 bits	16 bits	

Response parameter:

- Block Locking Status if Option_Flag is set
- 4 bytes of Block Data

Table 74. Block Locking status

b_7	b_6	b_5	b_4	b_3	b_2	b_1	b_0
All 0							0: Current Block not locked 1: Current Block locked

Table 75. Fast Read Single Block response format when Error_Flag is set

Response SOF	Response_ Flags	Error code	CRC16	Response EOF
	8 bits	8 bits	16 bits	

Response parameter:

- Error code as Error_Flag is set:
  - 0Fh: other error
  - 10h: block address not available

Figure 57. Fast Read Single Block frame exchange between VCD and LRI2K

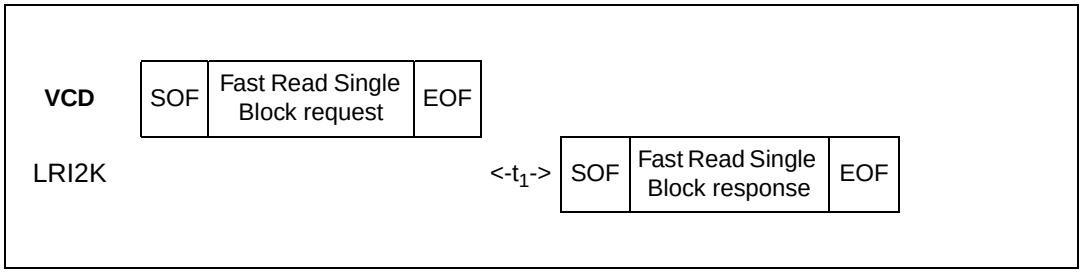

20.19 Fast Inventory Initiated

Before receiving the Fast Inventory Initiated command, the LRI2K must have received an Initiate or a Fast Initiate command in order to set the Initiate_ flag. If not, the LRI2K does not answer to the Fast Inventory Initiated command.

On receiving the Fast Inventory Initiated request, the LRI2K runs the anti-collision sequence. The Inventory_flag must be set to 1. The Meaning of Flags 5 to 8 is shown in *Table 13: Request flags 5 to 8 when bit 3 = 1*. The data rate of the response is multiplied by 2.

The request contains:

- the flags,
- the Inventory command code
- the AFI if the AFI flag is set
- the Mask Length
- the Mask Value
- the CRC

The LRI2K does not generate any answer if an error occurs.

Table 76. Fast Inventory Initiated request format

Request SOF	Request Flags	Fast Inventory Initiated	IC Mfg Code	Optional AFI	Mask length	Mask Value	CRC16	Request EOF
	8 bits	C1h	02h	8 bits	8 bits	0 - 64 bits	16 bits	

The response contains:

- The flags
- the Unique ID

Table 77. Fast Inventory Initiated response format

Response SOF	Response Flags	DSFID	UID	CRC16	Response EOF
	8 bits	00h	64 bits	16 bits	

During an Inventory process, if the VCD does not receive an RF LRI2K response, it waits a time t_3 before sending an EOF to switch to the next slot. t_3 starts from the rising edge of the request EOF sent by the VCD.

- If the VCD sends a 100% modulated EOF, the minimum value of t_3 is:
  $t_3 min = 4384/f_C$ (323.3 µs) + t_{SOF}
- If the VCD sends a 10% modulated EOF, the minimum value of t_3 is:
  $t_3 min = 4384/f_C$ (323.3 µs) + t_{NRT}

where:

- t_{SOF} is the time required by the LRI2K to transmit an SOF to the VCD
- t_{NRT} is the nominal response time of the LRI2K

t_{NRT} and t_{SOF} are dependent on the LRI2K-to-VCD data rate and subcarrier modulation mode.

20.20 Fast Initiate

On receiving the Fast Initiate command, the LRI2K sets the internal Initiate_Flag and sends back a response. The command has to be issued in the Non Addressed mode only (Select_Flag is reset to 0 and Address_Flag is reset to 0). If an error occurs, the LRI2K does not generate any answer. The Initiate_Flag is reset after a power off of the LRI2K. The data rate of the response is multiplied by 2.

The request contains:

- No data

Table 78. Fast Initiate request format

Request SOF	Request Flags	Fast Initiate	IC Mfg code	CRC16	Request EOF
	8 bits	C2h	02h	16 bits	

The response contains:

- the flags
- the Unique ID

Table 79. Fast Initiate Initiated response format

Response SOF	Response_ Flags	DSFID	UID	CRC16	Response EOF
	8 bits	00h	64 bits	16 bits	

Figure 58. Fast Initiate frame exchange between VCD and LRI2K

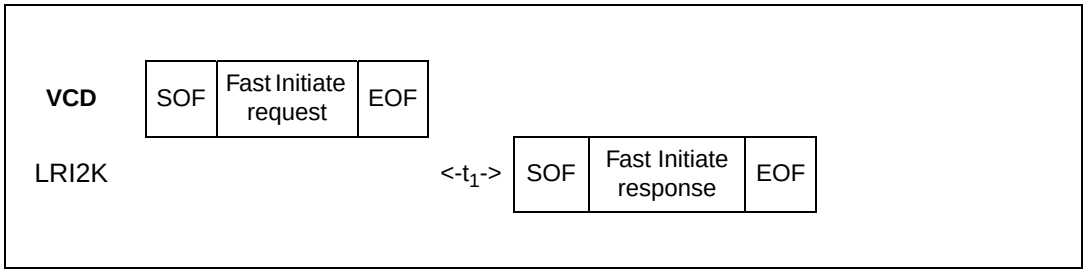

20.21 Fast Read Multiple Block

On receiving the Fast Read Multiple Block command, the LRI2K reads the requested blocks and sends back their value in multiples of 32 bits in the response. The blocks are numbered from '00' to '3F' in the request and the value is minus one (–1) in the field. For example, a value 06h in the “number of blocks” field causes the LRI2K to read 7 blocks. The maximum number of blocks is fixed at 64. During Sequential Block Read, when the block address reaches 64, it rolls over to 0. The Option_Flag is supported. The data rate of the response is multiplied by 2.

Table 80. Fast Read Multiple Block request format

Request SOF	Request_ Flags	Fast Read Multiple Block	IC Mfg code	UID	First block number	Number of blocks	CRC16	Request EOF
	8 bits	C3h	02h	64 bits	8 bits	8 bits	16 bits	

Request parameters:

- Option_Flag
- UID (Optional)
- First Block Number
- Number of Blocks

Table 81. Fast Read Multiple Block response format when Error_Flag is NOT set

Response SOF	Response_ Flags	Block Locking Status	Data	CRC16	Response EOF
	8 bits	8 bits(1)	32 bits(1)	16 bits	

1. Repeated as needed.

Response parameters:

- Block Locking Status if Option_Flag is set
- N Block of Data

Table 82. Block Locking status if Option_Flag is set

b_7	b_6	b_5	b_4	b_3	b_2	b_1	b_0
All 0							0: Current block not locked 1: Current block locked

Table 83. Fast Read Multiple Block response format when Error_Flag is set

Response SOF	Response_Flags	Error code	CRC16	Response EOF
	8 bits	8 bits	16 bits	

Response parameter:

- Error code as Error_Flag is set:
  - 0Fh: other error
  - 10h: block address not available

Figure 59. Fast Read Multiple Block frame exchange between VCD and LRI2K

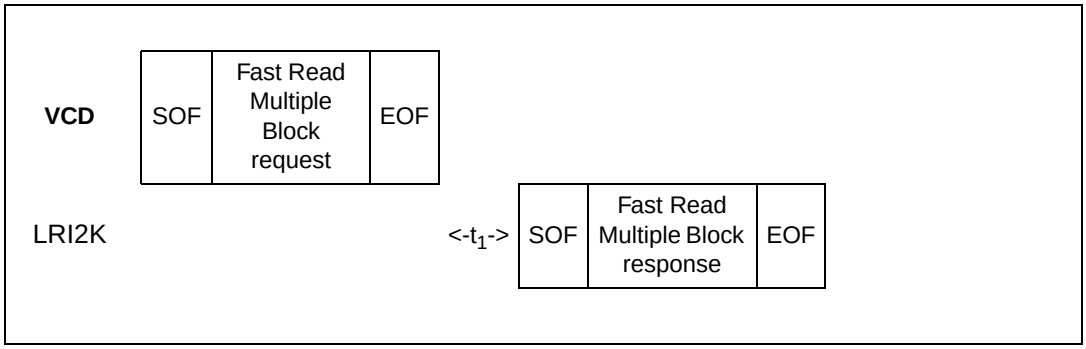

20.22 Inventory Initiated

Before receiving the Inventory Initiated command, the LRI2K must have received an Initiate or a Fast Initiate command in order to set the Initiate_ flag. If not, the LRI2K does not answer to the Inventory Initiated command.

On receiving the Inventory Initiated request, the LRI2K runs the anti-collision sequence. The Inventory_flag must be set to 1. The Meaning of Flags 5 to 8 is given in *Table 13: Request flags 5 to 8 when bit 3 = 1*.

The request contains:

- the flags,
- the Inventory Command code
- the AFI if the AFI flag is set
- the Mask Length
- the Mask Value
- the CRC

The LRI2K does not generate any answer if an error occurs.

Table 84. Inventory Initiated request format

Request SOF	Request Flags	Inventory Initiated	IC Mfg code	Optional AFI	Mask length	Mask value	CRC16	Request EOF
	8 bits	D1h	02h	8 bits	8 bits	0 - 64 bits	16 bits	

The response contains:

- the flags
- the Unique ID

Table 85. Inventory Initiated response format

Response SOF	Response Flags	DSFID	UID	CRC16	Response EOF
	8 bits	00h	64 bits	16 bits	

During an Inventory process, if the VCD does not receive an RF LRI2K response, it waits a time t_3 before sending an EOF to switch to the next slot. t_3 starts from the rising edge of the request EOF sent by the VCD.

- If the VCD sends a 100% modulated EOF, the minimum value of t_3 is:
  $t_3 min = 4384/f_C$ (323.3 µs) + t_{SOF}
- If the VCD sends a 10% modulated EOF, the minimum value of t_3 is:
  $t_3 min = 4384/f_C$ (323.3 µs) + t_{NRT}

where:

- t_{SOF} is the time required by the LRI2K to transmit an SOF to the VCD
- t_{NRT} is the nominal response time of the LRI2K

t_{NRT} and t_{SOF} are dependent on the LRI2K-to-VCD data rate and subcarrier modulation mode.

20.23 Initiate

On receiving the Initiate command, the LRI2K sets the internal Initiate_Flag and sends back a response. The command has to be issued in the Non Addressed mode only (Select_Flag is reset to 0 and Address_Flag is reset to 0). If an error occurs, the LRI2K does not generate any answer. The Initiate_Flag is reset after a power off of the LRI2K.

The request contains:

- No data

Table 86. Initiate request format

Request SOF	Request Flags	Initiate	IC Mfg code	CRC16	Request EOF
	8 bits	D2h	02h	16 bits	

The response contain:

- the flags
- the Unique ID

Table 87. Initiate Initiated response format

Response SOF	Response Flags	DSFID	UID	CRC16	Response EOF
	8 bits	00h	64 bits	16 bits	

Figure 60. Initiate frame exchange between VCD and LRI2K

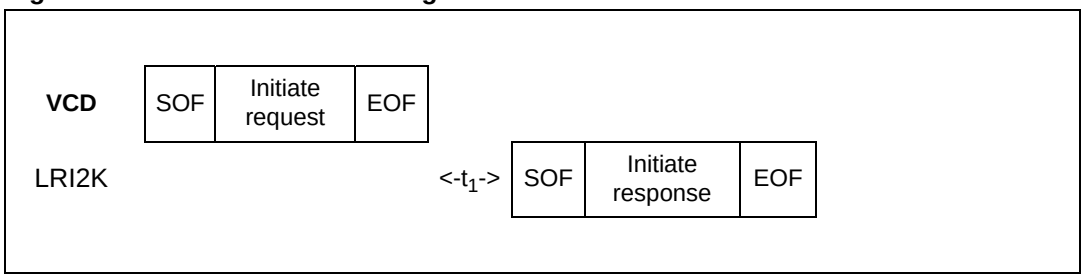

21 Maximum rating

Stressing the device above the rating listed in the Absolute Maximum Ratings table may cause permanent damage to the device. These are stress ratings only and operation of the device at these or any other conditions above those indicated in the Operating sections of this specification is not implied. Exposure to Absolute Maximum Rating conditions for extended periods may affect device reliability. Refer also to the STMicroelectronics SURE Program and other relevant quality documents.

Table 88. Absolute maximum ratings

Symbol	Parameter		Min.	Max.	Unit
T_{STG}, h_{STG}, t_{STG}	Storage conditions	Wafer	15	25	°C
				23	months
			kept in its antistatic bag		
		A1, A6, A7	15	25	°C
			40%	60%	RH
				2	years
I_{CC}	Supply current on AC0 / AC1		–20	20	mA
V_{MAX}	Input voltage on AC0 / AC1		–7	7	V
V_{ESD}	Electrostatic Discharge Voltage[1] [2]	A1, A6, A7	–7000	7000	V
		MLP (HBM[3])	–4000	4000	V
		MLP (MM[4])	–500	500	V

1. Mil. Std. 883 - Method 3015.
2. ESD test: ISO10373-7 specification.
3. Human body model.
4. Machine model.

22 DC and AC parameters

This section summarizes the operating and measurement conditions, and the DC and AC characteristics of the device. The parameters in the DC and AC Characteristic tables that follow are derived from tests performed under the Measurement Conditions summarized in the relevant tables. Designers should check that the operating conditions in their circuit match the measurement conditions when relying on the quoted parameters.

Table 89. AC characteristics(1) (2)

Symbol	Parameter	Condition	Min	Typ	Max	Unit
f_{CC}	External RF signal frequency		13.553	13.56	13.567	MHz
$MI_{CARRIER}$	10% carrier modulation index	MI=(A-B)/(A+B)	10		30	%
t_{RFR}, t_{RFF}	10% rise and fall time		0.5		3.0	µs
t_{RFSBL}	10% minimum pulse width for bit		7.1		9.44	µs
$MI_{CARRIER}$	100% carrier modulation index	MI=(A-B)/(A+B)	95		100	%
t_{RFR}, t_{RFF}	100% rise and fall time		0.5		3.5	µs
t_{RFSBL}	100% minimum pulse width for bit		7.1		9.44	µs
t_{JIT}	Bit pulse jitter		–2		+2	µs
$t_{MIN\ CD}$	Minimum time from carrier generation to first data	From H-field min		0.1	1	ms
f_{SH}	Subcarrier frequency high	$F_{CC}/32$		423.75		kHz
f_{SL}	Subcarrier frequency low	$F_{CC}/28$		484.28		kHz
t_1	Time for LRI2K response	$4224/F_S$	318.6	320.9	323.3	µs
t_2	Time between command	$4224/F_S$	309	311.5	314	µs
t_W	Programming time				5.8	ms

1. T_A = –20 to 85°C.
2. All timing measurements were performed on a reference antenna with the following characteristics:
   External size: 75mm x 48mm
   Number of turns: 6
   Width of conductor: 1mm
   Space between 2 conductors: 0.4mm
   Value of the Tuning Capacitor: 28.5pF (LRI2K-W4)
   Value of the coil: 4.3µH
   Tuning Frequency: 13.8MHz.

Table 90. DC characteristics(1)

Symbol	Parameter		Test conditions	Min.	Typ.	Max.	Unit
V_{CC}	Regulated voltage			1.5		3.0	V
V_{RET}	Retromodulated induced voltage		ISO10373-7	10			mV
I_{CC}	Supply current	Read	V_{CC} = 3.0 V			50	µA
		Write	V_{CC} = 3.0 V			150	µA
C_{TUN}	Internal tuning capacitor		f=13.56 MHz for W4/1		21		pF
			f=13.56 MHz for W4/2		28.5		pF
			f=13.56 MHz for W4/3		97		pF

1. T_A = –20 to 85°C.

Table 91. Operating conditions

Symbol	Parameter	Min.	Max.	Unit
T_A	Ambient operating temperature	–20	85	°C

Figure 61. LRI2K synchronous timing, transmit and receive

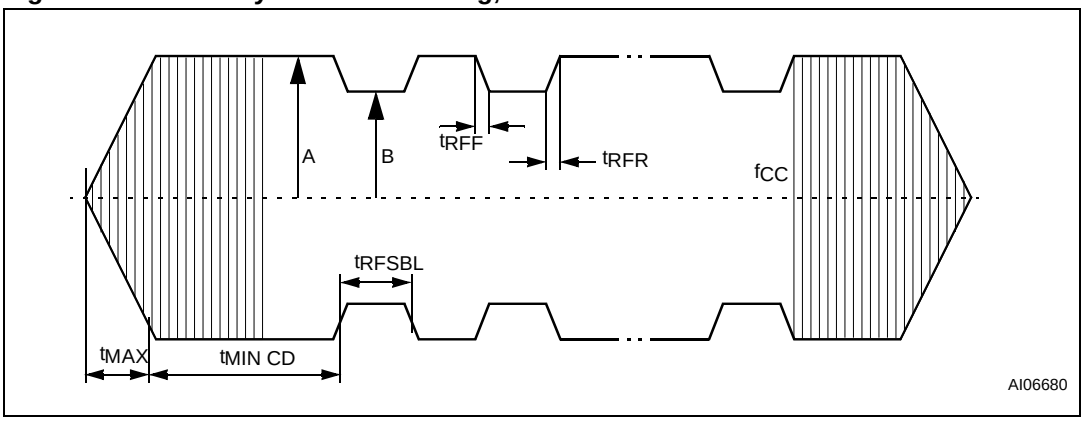

Figure 61 shows an ASK modulated signal, from the VCD to the LRI2K. The test condition for the AC/DC parameters are:

- Close coupling condition with tester antenna (1mm)
- LRI2K performance measured at the tag antenna

23 Package mechanical

In order to meet environmental requirements, ST offers these devices in ECOPACK® packages. These packages have a Lead-free second-level interconnect. The category of Second-Level Interconnect is marked on the package and on the inner box label, in compliance with JEDEC Standard JESD97.

The maximum ratings related to soldering conditions are also marked on the inner box label. ECOPACK is an ST trademark. ECOPACK specifications are available at: *www.st.com*.

Figure 62. A1 Antenna on tape outline

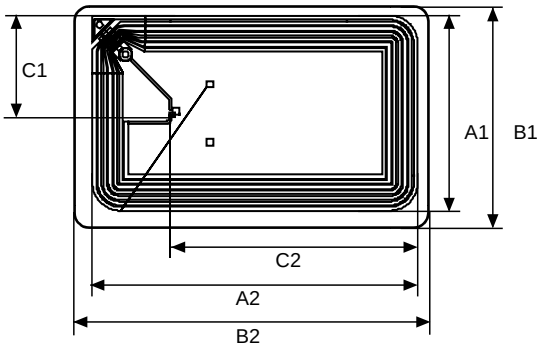

1. Drawing is not to scale.

Table 92. A1 Antenna on tape mechanical data

Symbol	Parameter	Typ	Min	Max	Unit
A1	Coil width	45	44.5	45.5	mm
A2	Coil length	76	75.5	76.5	mm
B1	Antenna cut width	49	48.8	49.2	mm
B2	Antenna cut length	82	81.8	82.2	mm
C1	Die position from antenna	23	22.8	23.2	mm
C2	Die position from antenna	56	55.8	56.2	mm
	Silicon thickness	180	165	195	µm
Q	Unloaded Q value	35			
F_{NOM}	Unloaded free-air resonance	15.1			MHz
P_A	H-field energy for device operation		0.03 90		A/m dbµA/m

Figure 63. A6 antenna on tape outline

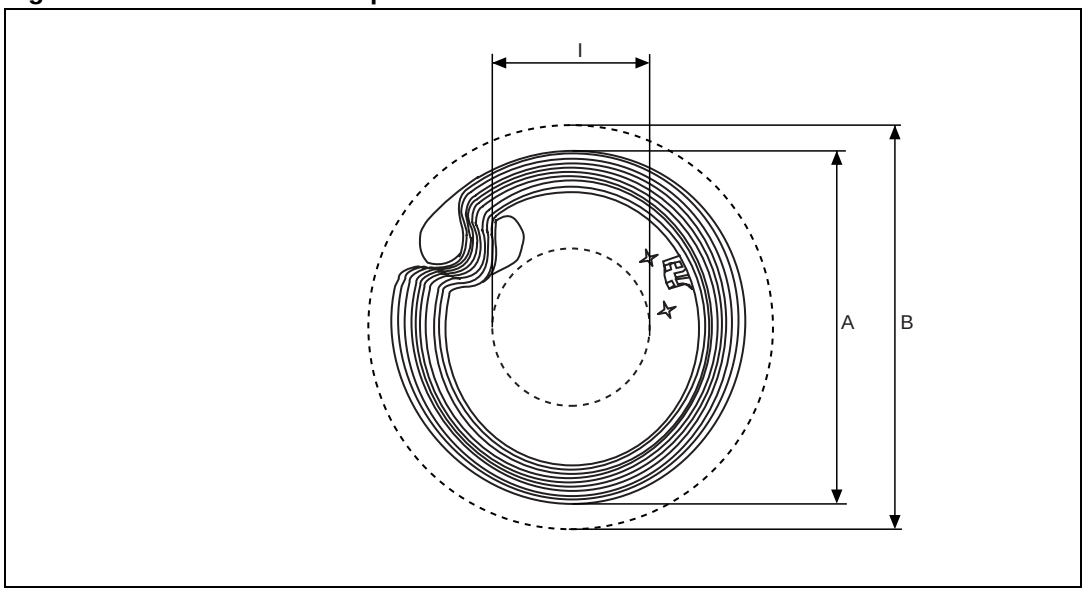

1. Drawing is not to scale.

Table 93. A6 antenna on tape mechanical data

Symbol	Parameter	Typ	Min	Max	Unit
A	Coil diameter	35	34.5	35.5	mm
B	Antenna cut diameter	40	38.8	40.2	mm
I	Hole diameter	16	15.8	16.2	mm
	Overall thickness of copper antenna coil	80	70	90	µm
	Silicon thickness	180	165	195	µm
Q	Unloaded Q value	35			
F_{NOM}	Unloaded free-air resonance	15.1			MHz
P_A	H-field energy for device operation		0.5 114		A/m dbµA/m

Figure 64. A7 antenna on tape outline

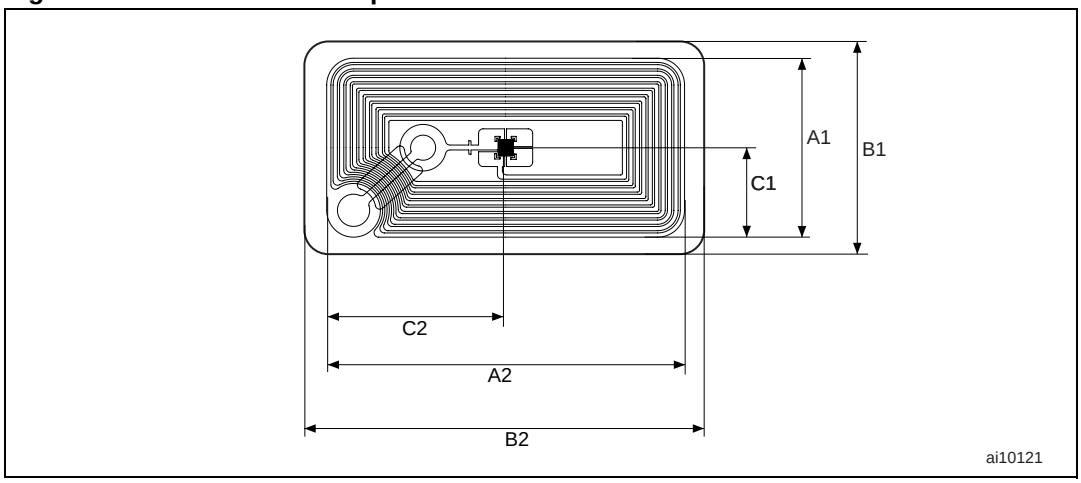

1. Drawing is not to scale.

Table 94. A7 antenna on tape mechanical data

Symbol	Parameter	Typ	Min	Max	Unit
A1	Coil width	40	39.5	40.5	mm
A2	Coil length	20	19.5	20.5	mm
B1	Antenna cut width	44	43.8	44.2	mm
B2	Antenna cut length	24	23.8	24.2	mm
C1	Die position from antenna	10	9.8	10.2	mm
C2	Die position from antenna	20	19.8	20.2	mm
	Overall thickness of copper antenna coil	160	145	175	µm
	Silicon thickness	180	165	195	µm
Q	Unloaded Q value	35			
F_{NOM}	Unloaded free-air resonance	15.1			MHz
P_A	H-field energy for device operation		1 120		A/m dbµA/m

Figure 65. UFDFPN8 - 8-lead ultra thin fine pitch dual flat package no lead (MLP) outline

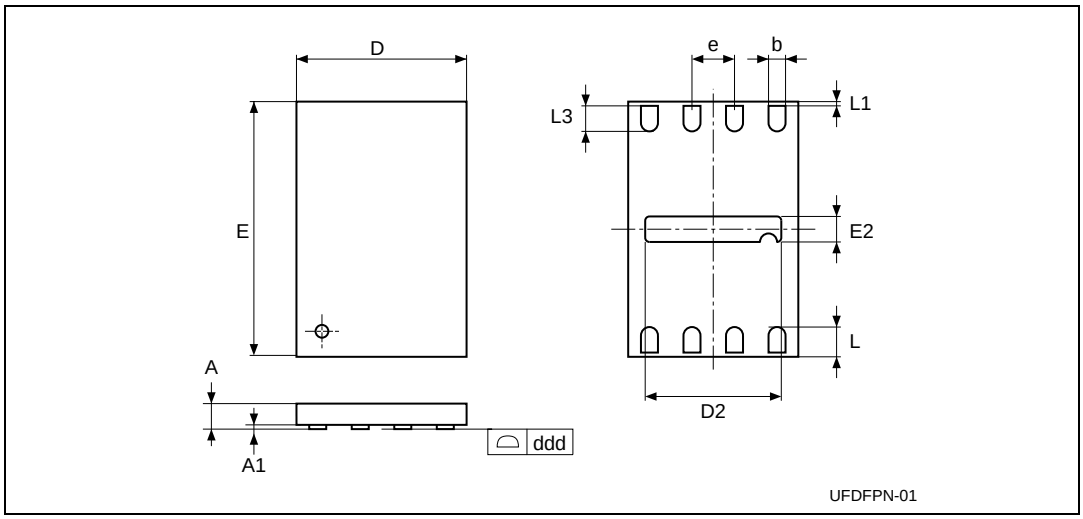

1. Drawing is not to scale.

Table 95. UFDFPN8 - 8-lead ultra thin fine pitch dual flat package no lead (MLP) mechanical data

Symbol	Millimeters			Inches		
	Typ.	Min.	Max.	Typ.	Min.	Max.
A	0.55	0.50	0.60	0.022	0.020	0.024
A1		0.00	0.05		0.000	0.002
b	0.25	0.20	0.30	0.010	0.008	0.012
D	2.00			0.079		
D2		1.55	1.65		0.061	0.065
ddd			0.05			0.002
E	3.00			0.118		
E2		0.15	0.25		0.006	0.010
e	0.50	–	–	0.020	–	–
L	0.45	0.40	0.50	0.018	0.016	0.020
L1			0.15			0.006
L3		0.30			0.012	
N	8			8		

24 Part numbering

Table 96. Ordering information scheme

Example: LRI2K - W4/2

Device type

LRI2K

Package

W4 =180 µm ± 15 µm unsawn wafer

SBN18 = 180 µm ± 15 µm bumped and sawn wafer on 8-inch frame

A1T = 45 mm x 76 mm copper antenna on continuous tape

A1S = 45 mm x 76 mm copper singulated adhesive antenna on tape

A6S2U = 35 mm copper singulated adhesive CD antenna on white PET tape and no marking

A7T = 20 mm x 40 mm copper antenna on continuous tape

MBTG = UFDFPN8 (MLP8), tape & reel packing, lead-free, RoHS compliant, Sb2O3-free and TBBA-free

For further information on any aspect of this device, please contact your nearest ST sales office.

Appendix A Anti-collision algorithm (Informative)

The following pseudocode describes how anti-collision could be implemented on the VCD, using recursivity.

A.1 Algorithm for pulsed slots

```
function push (mask, address); pushes on private stack

function pop (mask, address); pops from private stack

function pulse_next_pause; generates a power pulse

function store(LRI2K_UID); stores LRI2K_UID

function poll_loop (sub_address_size as integer)
  pop (mask, address)
  mask = address & mask; generates new mask
            ; send the request
  mode = anti-collision
  send_request (Request_cmd, mode, mask length, mask value)
  for sub_address = 0 to (2^sub_address_size - 1)
    pulse_next_pause
    if no_collision_is_detected ; LRI2K is inventoried
      then
        store (LRI2K_UID)
      else ; remember a collision was detected
        push(mask,address)
      endif
    next sub_address

  if stack_not_empty ; if some collisions have been detected and
    then   ; not yet processed, the function calls itself
      poll_loop (sub_address_size); recursively to process the
last stored collision
    endif
end poll_loop

main_cycle:
  mask = null
  address = null
  push (mask, address)
  poll_loop(sub_address_size)
end_main_cycle
```

Appendix B CRC (Informative)

B.1 CRC error detection method

The Cyclic Redundancy Check (CRC) is calculated on all data contained in a message, from the start of the Flags through to the end of Data. The CRC is used from VCD to LRI2K and from LRI2K to VCD.

Table 97. CRC definition

CRC Definition					
CRC type	**Length**	**Polynomial**	**Direction**	**Preset**	**Residue**
ISO/IEC 13239	16 bits	$X^{16} + X^{12} + X^5 + 1 = 8408h$	Backward	FFFFh	F0B8h

To add extra protection against shifting errors, a further transformation on the calculated CRC is made. The One's Complement of the calculated CRC is the value attached to the message for transmission.

To check received messages the 2 CRC bytes are often also included in the re-calculation, for ease of use. In this case, the expected value for the generated CRC is the residue F0B8h.

B.2 CRC calculation example

This example in C language illustrates one method of calculating the CRC on a given set of bytes comprising a message.

C-Example to calculate or check the CRC16 according to ISO/IEC 13239

```
#define  POLYNOMIAL8408h//  x^16 + x^12 + x^5 + 1
#define  PRESET_VALUEFFFFh
#define  CHECK_VALUEF0B8h

#define  NUMBER_OF_BYTES4// Example: 4 data bytes
#define  CALC_CRC1
#define  CHECK_CRC0

void main()
{
  unsigned int  current_crc_value;
  unsigned char array_of_databytes[NUMBER_OF_BYTES + 2] = {1, 2, 3,
4, 91h, 39h};
  int           number_of_databytes = NUMBER_OF_BYTES;
  int           calculate_or_check_crc;
  int           i, j;
  calculate_or_check_crc = CALC_CRC;
// calculate_or_check_crc = CHECK_CRC;// This could be an other
example
  if (calculate_or_check_crc == CALC_CRC)
  {
      number_of_databytes = NUMBER_OF_BYTES;
```

```
  }
  else    // check CRC
  {
      number_of_databytes = NUMBER_OF_BYTES + 2;
  }

  current_crc_value = PRESET_VALUE;

  for (i = 0; i < number_of_databytes; i++)
  {
      current_crc_value = current_crc_value ^ ((unsigned
int)array_of_databytes[i]);

      for (j = 0; j < 8; j++)
      {
          if (current_crc_value & 0001h)
          {
              current_crc_value = (current_crc_value >> 1) ^
POLYNOMIAL;
          }
          else
          {
              current_crc_value = (current_crc_value >> 1);
          }
      }
  }

  if (calculate_or_check_crc == CALC_CRC)
  {
      current_crc_value = ~current_crc_value;

      printf ("Generated CRC is 0x%04X\n", current_crc_value);

      // current_crc_value is now ready to be appended to the data
stream
      // (first LSByte, then MSByte)
  }
  else   // check CRC
  {
      if (current_crc_value == CHECK_VALUE)
      {
          printf ("Checked CRC is ok (0x%04X)\n",
current_crc_value);
      }
      else
      {
          printf ("Checked CRC is NOT ok (0x%04X)\n",
current_crc_value);
      }
  }
}
```

B.3 Application Family Identifier (AFI) (Informative)

The AFI (Application Family Identifier) represents the type of application targeted by the VCD and is used to extract from all the LRI2K present only the LRI2K meeting the required application criteria.

It is programmed by the LRI2K issuer (the purchaser of the LRI2K). Once locked, it cannot be modified.

The most significant nibble of the AFI is used to code one specific or all application families, as defined in *Table 98*.

The least significant nibble of the AFI is used to code one specific or all application sub-families. Sub-family codes different from 0 are proprietary.

Table 98. AFI coding(1)

AFI most significant nibble	AFI least significant nibble	Meaning VICCs respond from	Examples / Note
‘0’	‘0’	All families and sub-families	No applicative preselection
‘X’	'0	'All sub-families of family X	Wide applicative preselection
'X	‘‘Y’	Only the Yth sub-family of family X	
‘0’	‘Y’	Proprietary sub-family Y only	
‘1	‘‘0’, ‘Y’	Transport	Mass transit, Bus, Airline etc.
'2	‘‘0’, ‘Y’	Financial	IEP, Banking, Retail etc.
'3	‘‘0’, ‘Y’	Identification	Access Control etc.
'4	‘‘0’, ‘Y’	Telecommunication	Public Telephony, GSM etc.
‘5’	‘0’, ‘Y’	Medical	
'6	‘‘0’, ‘Y’	Multimedia	Internet services etc.
'7	‘‘0’, ‘Y’	Gaming	
8	‘‘0’, ‘Y’	Data storage	Portable Files etc.
'9	‘‘0’, ‘Y’	Item management	
'A	‘‘0’, ‘Y’	Express parcels	
'B	‘‘0’, ‘Y’	Postal services	
'C	‘‘0’, ‘Y’	Airline bags	
'D	‘‘0’, ‘Y’	RFU	
'E	‘‘0’, ‘Y’	RFU	
‘F’	‘0’, ‘Y’	RFU	

1. X = '1' to 'F', Y = '1' to 'F.

Revision history

Table 99. Document revision history

Date	Revision	Changes
17-Feb-2006	1	Initial release.
08-Feb-2007	2	*Figure 2: MLP connections* added. Only bits set to '1' are programmed to the AFI and DSFID Registers (see *Section 20.9: Write AFI* and *Section 20.11: Write DSFID*. C_{TUN} typical value for W4/3 modified in *Table 90: DC characteristics*. Small text changes.
15-Jun-2007	3	*Section 20.9: Write AFI* and *Section 20.11: Write DSFID* modified.
20-Jul-2007	4	Document status promoted from Preliminary Data to full Datasheet. Small text changes.

Please Read Carefully:

Information in this document is provided solely in connection with ST products. STMicroelectronics NV and its subsidiaries (“ST”) reserve the right to make changes, corrections, modifications or improvements, to this document, and the products and services described herein at any time, without notice.

All ST products are sold pursuant to ST’s terms and conditions of sale.

Purchasers are solely responsible for the choice, selection and use of the ST products and services described herein, and ST assumes no liability whatsoever relating to the choice, selection or use of the ST products and services described herein.

No license, express or implied, by estoppel or otherwise, to any intellectual property rights is granted under this document. If any part of this document refers to any third party products or services it shall not be deemed a license grant by ST for the use of such third party products or services, or any intellectual property contained therein or considered as a warranty covering the use in any manner whatsoever of such third party products or services or any intellectual property contained therein.

UNLESS OTHERWISE SET FORTH IN ST’S TERMS AND CONDITIONS OF SALE ST DISCLAIMS ANY EXPRESS OR IMPLIED WARRANTY WITH RESPECT TO THE USE AND/OR SALE OF ST PRODUCTS INCLUDING WITHOUT LIMITATION IMPLIED WARRANTIES OF MERCHANTABILITY, FITNESS FOR A PARTICULAR PURPOSE (AND THEIR EQUIVALENTS UNDER THE LAWS OF ANY JURISDICTION), OR INFRINGEMENT OF ANY PATENT, COPYRIGHT OR OTHER INTELLECTUAL PROPERTY RIGHT.

UNLESS EXPRESSLY APPROVED IN WRITING BY AN AUTHORIZED ST REPRESENTATIVE, ST PRODUCTS ARE NOT RECOMMENDED, AUTHORIZED OR WARRANTED FOR USE IN MILITARY, AIR CRAFT, SPACE, LIFE SAVING, OR LIFE SUSTAINING APPLICATIONS, NOR IN PRODUCTS OR SYSTEMS WHERE FAILURE OR MALFUNCTION MAY RESULT IN PERSONAL INJURY, DEATH, OR SEVERE PROPERTY OR ENVIRONMENTAL DAMAGE. ST PRODUCTS WHICH ARE NOT SPECIFIED AS "AUTOMOTIVE GRADE" MAY ONLY BE USED IN AUTOMOTIVE APPLICATIONS AT USER’S OWN RISK.

Resale of ST products with provisions different from the statements and/or technical features set forth in this document shall immediately void any warranty granted by ST for the ST product or service described herein and shall not create or extend in any manner whatsoever, any liability of ST.

ST and the ST logo are trademarks or registered trademarks of ST in various countries.

Information in this document supersedes and replaces all information previously supplied.

The ST logo is a registered trademark of STMicroelectronics. All other names are the property of their respective owners.

© 2007 STMicroelectronics - All rights reserved

STMicroelectronics group of companies

Australia - Belgium - Brazil - Canada - China - Czech Republic - Finland - France - Germany - Hong Kong - India - Israel - Italy - Japan - Malaysia - Malta - Morocco - Singapore - Spain - Sweden - Switzerland - United Kingdom - United States of America

www.st.com