LOW NOISE 500mA LDO REGULATOR

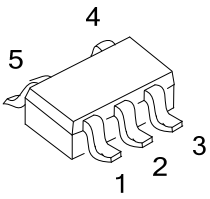

SOT-25

■ DESCRIPTION

The UTC **LR9153** is a typical LDO (linear regulator) with the features of high output voltage accuracy, low supply current, low ON-resistance, and high ripple rejection.

During operation of the UTC **LR9153**, the dropout voltage is very low and the response of line transient and load transient are very well.

Internally, there're many functions of UTC **LR9153** which can be seen in the block figure. There are a voltage reference unit, an error amplifier, resistor-net for voltage setting, a current limit circuit, and a chip enable circuit in each UTC **LR9153**.

The UTC **LR9153** can be used as an ideal of the power supply for hand-held communication equipment, such as: power source for portable communication equipment, power source for electrical appliances, for example, cameras, VCRs and camcorders and power source for battery-powered equipment.

■ FEATURES

* Ultra Supply Current: 50μA (Typ.)
* Standby Mode: 0.1μA (Typ.)
* Very Low Dropout Voltage: 0.30V (Typ.) @ I_{OUT} =300mA, V_{OUT} =2.85V
* Well Line Regulation: 0.02%/ V (Typ.)
*Output Voltage Accuracy: ±2.0%
* Internal Fold Back Protection Circuit: 80mA (Typ.) (Current at short mode)
*C_{IN}=C_{OUT}=1.0μF or more (Ceramic capacitors) are recommended to be used with this IC

■ ORDERING INFORMATION

Ordering Number		Package	Packing
Lead Free	Halogen Free		
LR9153L-xx-AF5-R	LR9153G-xx-AF5-R	SOT-25	Tape Reel

Note: xx: Output Voltage, refer to Marking Information.

LR9153G-xx-AF5-R

(1)Packing Type	(1) R: Tape Reel
(2)Package Type	(2) AF5: SOT-25
(3)Output Voltage Code	(3) xx: refer to Marking Information
(4)Green Package	(4) G: Halogen Free and Lead Free, L: Lead Free

Copyright © 2017 Unisonic Technologies Co., Ltd

■ MARKING INFORMATION

PACKAGE	VOLTAGE CODE	MARKING
SOT-25	33: 3.3V	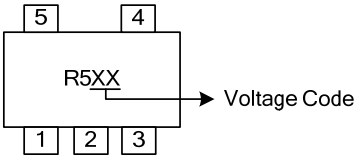

■ PIN CONFIGURATION

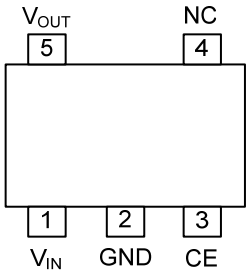

■ PIN DESCRIPTION

PIN NO.	PIN NAME	DESCRIPTION
1	V_{IN}	Input Pin
2	GND	Ground Pin
3	CE	Chip Enable Pin. Active when this Pin is high.
4	NC	No Connection
5	V_{OUT}	Output Pin

■ BLOCK DIAGRAM

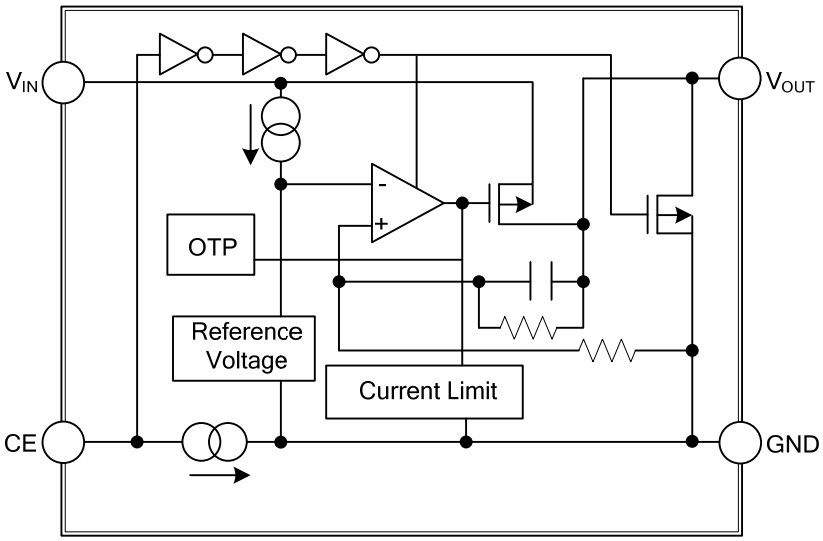

■ ABSOLUTE MAXIMUM RATING

PARAMETER	SYMBOL	RATINGS	UNIT
Input Voltage	V_{IN}	6	V
Input Voltage (CE Pin)	V_{CE}	6	V
Output Voltage	V_{OUT}	-0.3~V_{IN}+0.3	V
Output Current	I_{OUT}	550	mA
Power Dissipation	P_D	360	mW
Junction Temperature	T_J	+125	°C
Operating Temperature	T_{OPR}	-40 ~ +85	°C
Storage Temperature	T_{STG}	-55 ~ +125	°C

Note: Absolute maximum ratings are those values beyond which the device could be permanently damaged. Absolute maximum ratings are stress ratings only and functional device operation is not implied.

■ ELECTRICAL CHARACTERISTICS

(T_A=25°C, V_{IN}=Set V_{OUT}+1V, I_{OUT}=1mA, C_I =C_O=1.0μF, unless otherwise specified)

PARAMETER		SYMBOL	TEST CONDITIONS		MIN	TYP	MAX	UNIT
Output Voltage		V_{OUT}	V_{IN}=Set V_{OUT}+1V		×0.98		×1.02	V
Input Voltage		V_{IN}					6	V
Load Regulation		ΔV_{OUT}	1mA≤I_{OUT}≤500mA			30	60	mV
Output Current		I_{OUT}			500			mA
Supply Current		I_{SS}	I_{OUT}=0A			50	80	μA
Supply Current (Standby)		I_{ST-BY}	V_{CE}=0V			0.1	2	μA
Short Current Limit		I_{LIMIT}	V_{OUT}=0V			80		mA
CE Pull-down Current		I_{PD}				0.3		μA
CE Input Voltage	High	V_{CEH}			1.2			V
	Low	V_{CEL}					0.3	V
Output Noise		eN	B_W=10Hz~100kHz, I_{OUT}=30mA			50		μVrms
Ripple Rejection		RR	f=1kHz, Ripple 0.2V_{P-P} V_{IN}=Set V_{OUT}+1V, I_{OUT}=30mA (In case that V_{OUT}=2.0V, V_{IN}=3V)			65		dB
Dropout Voltage		V_D	I_{OUT}=300mA	2.5V≤V_{OUT}<2.8V		0.32		V
				2.8V≤V_{OUT}≤5.0V		0.30		
Line Regulation		$\frac{\Delta V_{OUT}}{\Delta V_{IN}}$	1.2V≤V_{OUT}≤4.0V, V_{SET}+0.5V≤V_{IN}≤5V			0.02	0.10	%/V
			4.0V<V_{OUT}≤5.0V, V_{SET}+0.5V≤V_{IN}≤6.5V					
Thermal Shutdown Detector Threshold Temperature		TTSD	Junction Temperature			150		°C
Thermal Shutdown Released Temperature		TTSR	Junction Temperature			120		°C
Low Output Nch Tr. ON Resistance		R_{LOW}	V_{IN}=4.0, V_{CE}=0V			60		Ω

■ TEST CIRCUIT

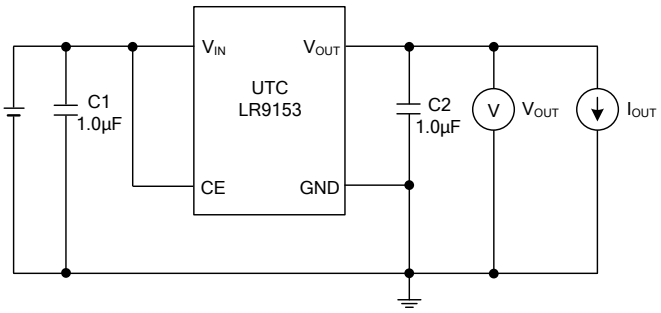

Basic Test Circuit

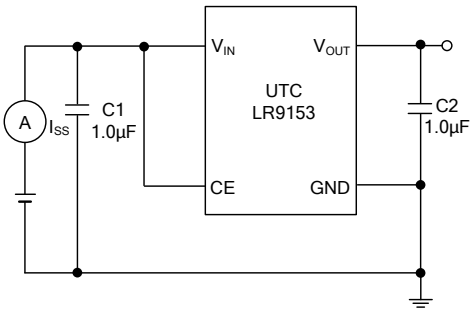

Test Circuit for Supply Current

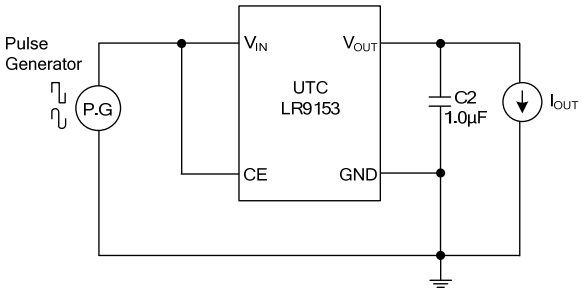

Test Circuit for Ripple Rejection

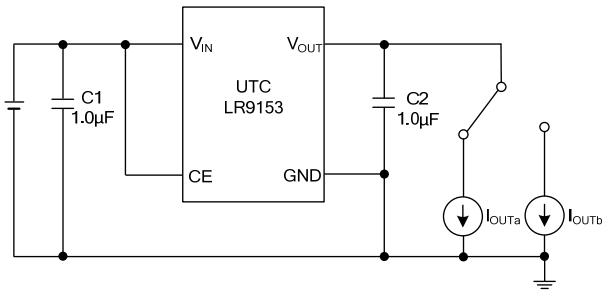

Test Circuit for Load Transient Response

■ TYPICAL APPLICATION CIRCUIT

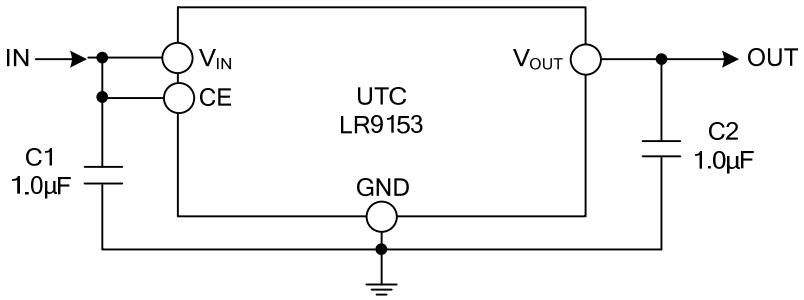

UTC assumes no responsibility for equipment failures that result from using products at values that exceed, even momentarily, rated values (such as maximum ratings, operating condition ranges, or other parameters) listed in products specifications of any and all UTC products described or contained herein. UTC products are not designed for use in life support appliances, devices or systems where malfunction of these products can be reasonably expected to result in personal injury. Reproduction in whole or in part is prohibited without the prior written consent of the copyright owner. UTC reserves the right to make changes to information published in this document, including without limitation specifications and product descriptions, at any time and without notice. This document supersedes and replaces all information supplied prior to the publication hereof.