OUTPUT CAPACITOR-LESS LOW VOLTAGE 200mA LDO REGULATOR

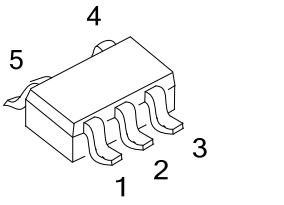

SOT-25

■ DESCRIPTION

The UTC **LR9107** is a CMOS-based low dropout regulator with high output voltage accuracy, low dropout, high PSRR and low quiescent current.

The UTC **LR9107** includes a voltage reference unit, an error amplifier, current limit circuit, resistors for setting output voltage, and a chip enable circuit. With its low power consumption, excellent line and load transient response, the UTC **LR9107** is well suited for low power handheld communication equipment.

Since the output capacitor and noise bypass capacitor are able to be reduced, high density mounting on boards are possible.

■ FEATURES

* Quiescent current: Typ. 9.5μA
* Low V_{IN} and wide V_{IN} range: 1.4V~5.25V
* Guarantee output current: 200mA
* VOUT accuracy: ±1%
* Ripple Rejection: Typ. 70dB (f=1kHz,V_{OUT}≤1.2V)
  Typ. 65dB (f=1kHz, 1.2V<V_{OUT}<2.2V)
  Typ. 60dB (f=1kHz, V_{OUT}≥2.2V)
* Temperature-drift coefficient of output voltage: Typ. ±100ppm/°C
* Low output noise: 60uVrms (10Hz~100kHz)
* Quiescent current: 35μA

■ ORDERING INFORMATION

Ordering Number		Package	Packing
Lead Free	Halogen Free		
LR9107xL-xx-AF5-R	LR9107xG-xx-AF5-R	SOT-25	Tape Reel

Note: xx: Output Voltage, refer to Marking Information.

LR9107xG-xx-AF5-R
(1)Packing Type
(2)Package Type
(3)Output Voltage Code
(4)Green Package
(5)Active

(1) R: Tape Reel
(2) AF5: SOT-25
(3) xx: refer to Marking Information
(4) G: Halogen Free and Lead Free, L: Lead Free
(5) B: without auto discharge function
D: with auto discharge function

Copyright © 2017 Unisonic Technologies Co., Ltd

■ MARKING

PACKAGE	VOLTAGE CODE	MARKING
SOT-25	18: 1.8V 28: 2.8V	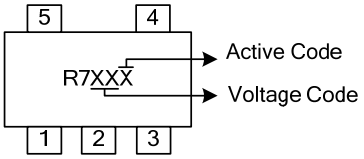

■ PIN CONFIGURATION

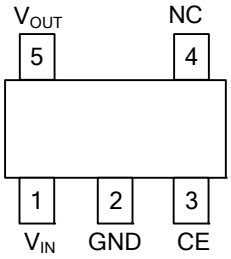

■ PIN DESCRIPTION

PIN NO.	PIN NAME	DESCRIPTION
1	V_{IN}	Power Input Pin
2	GND	Ground
3	CE	Enable Pin. This pin should not be floating. Driving this pin “1” enables the regulator, while “0” shutdown the regulator.
4	NC	No Connection
5	V_{OUT}	Power Output Pin

■ BLOCK DIAGRAM

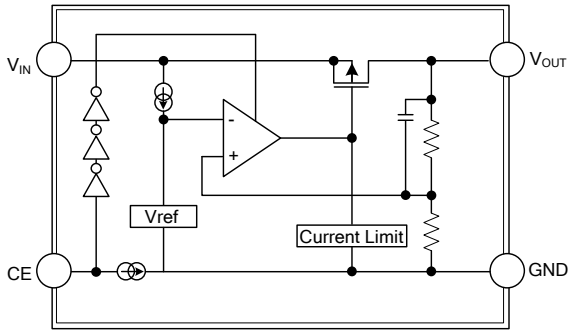

UTC LR9107B (Non Discharge)

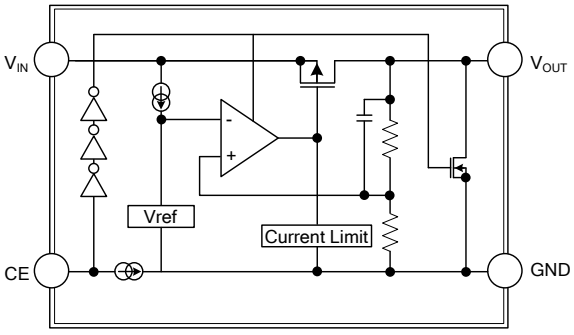

UTC LR9107D (With Discharge)

■ ABSOLUTE MAXIMUM RATINGS (T_A=25°C, unless otherwise specified.)

PARAMETER	SYMBOL	RATINGS	UNIT
Input Voltage	V_{IN}	6.0	V
Input Voltage CE	V_{CE}	6.0	V
Output Voltage	V_{OUT}	-0.3 ~ V_{IN}+0.3	V
Output Current	I_{OUT}	300	mA
Power Dissipation	P_D	380	mW
Operating Temperature	T_A	-40 ~ +85	°C
Storage Temperature	T_{STG}	-55 ~ +125	°C

Note: Absolute maximum ratings are those values beyond which the device could be permanently damaged. Absolute maximum ratings are stress ratings only and functional device operation is not implied.

■ RECOMMENDED OPERATING CONDITIONS (T_A=25°C, unless otherwise specified.)

PARAMETER	SYMBOL	RATINGS	UNIT
Input Voltage	V_{IN}	1.7 ~ 5.25	V
Output Current	I_{OUT}	0 ~ 150	mA
Operating Ambient Temperature	T_A	-40 ~ +85	°C

■ ELECTRICAL CHARACTERISTICS

(V_{CE}=V_{IN}=V_{OUT}+1.0V, C_{IN}=C_{OUT} 0.47μF, I_{OUT}=1.0mA, T_A=25°C, unless otherwise specified)

PARAMETER	SYMBOL	TEST CONDITIONS		MIN	TYP	MAX	UNIT
Input Voltage	V_{IN}	T_A=-40°C~+85°C				5.25	V
Output Voltage Accuracy (Note 6)	V_{OC}	V_{IN}=($V_{OUT-NOM}$+1.0V)~5.25V, I_{OUT}=1mA~200mA	T_A=+25°C	-1		+1	%
			T_A=-40°C~+85°C	-1.5		+1.5	
Line Regulation ($dV_{OUT}/dV_{IN}/V_{OUT}$)	$\Delta V_{OUT}/\Delta V_{IN}$	V_{IN}=($V_{OUT-NOM}$+1.0V)~5.25V, I_{OUT}=1.0mA			0.02	0.1	%/V
Load Regulation ($dV_{OUT}/V_{OUT}/dI_{OUT}$)	$\Delta V_{OUT}/\Delta I_{OUT}$	V_{IN}=$V_{OUT-NOM}$+1.0V, I_{OUT}=1mA~200mA			0.5	1.0	%/A
Quiescent Current (Note 2)	I_Q	I_{OUT}=0mA			9.5	25	μA
$I_{STANDBY}$	$I_{STANDBY}$	V_{CE}=0V (Disabled)			0.1	3.0	μA
Output Current	I_{OUT}			200			mA
Fold-Back Short Current (Note 3)	I_{SC}	V_{OUT} short to ground			50		mA
Ripple Rejection (Note 4)	RR	V_{OUT}≤1.2V	f=1kHz		70		dB
		1.2V<V_{OUT}<2.2V	V_{IN}=[V_{OUT}+1V],		65		
		V_{OUT}≥2.2V	I_{OUT}=30mA		60		
Dropout Voltage (Note 1)	V_{DROP}	I_{OUT}=200mA	1.5V≤V_{OUT}<2.0V		0.44		V
			2.0V≤V_{OUT}<2.6V		0.35		
			2.6≤V_{OUT}		0.27		
Output Voltage Temperature Coefficient	$\frac{\Delta V_{OUT}}{\Delta T}$	I_{OUT}=30mA, T_A=-40°C~+85°C			±100		ppm/°C
CE Pull-Down Current	I_{PD}				0.1		μA
CE Input Low Voltage	V_{CEL}					0.4	V
CE Input High Voltage	V_{CEH}			1.0			V
On Resistance of N-channel for Auto-Discharge (Note 5)	R_{ON}	V_{IN}=4.0V, V_{EN}=0V (Disabled)			30		Ω

Notes: 1. Dropout voltage (V_{DROP}) is the voltage difference between the input and the output at which the output voltage drops 2% below its nominal value.
2. Quiescent current (I_Q) is the current difference between the input and the output.
3. Short circuit current (I_{SC}) is measured with V_{OUT} pulled to GND.
4. This specification is guaranteed by design.
5. UTC **LR9107** has 2 options for output, built-in discharge and non-discharge.
6. Potential multiple grades based on following output voltage accuracy.

■ TEST CIRCUITS

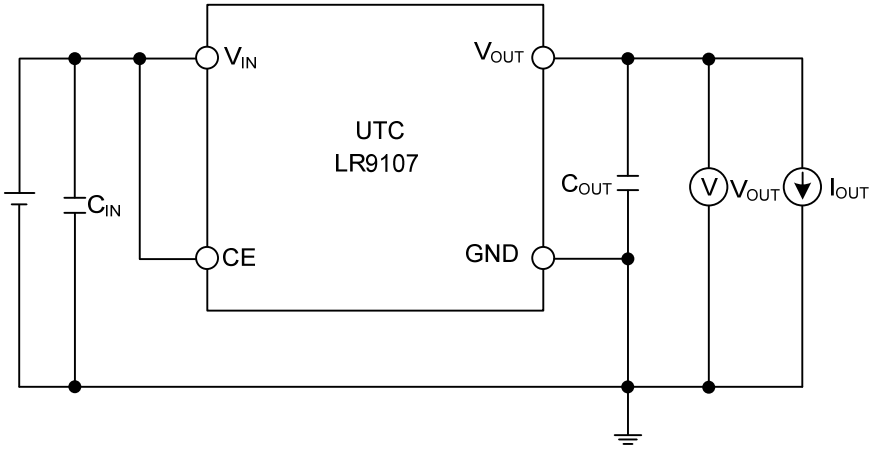

Basic Test Circuit

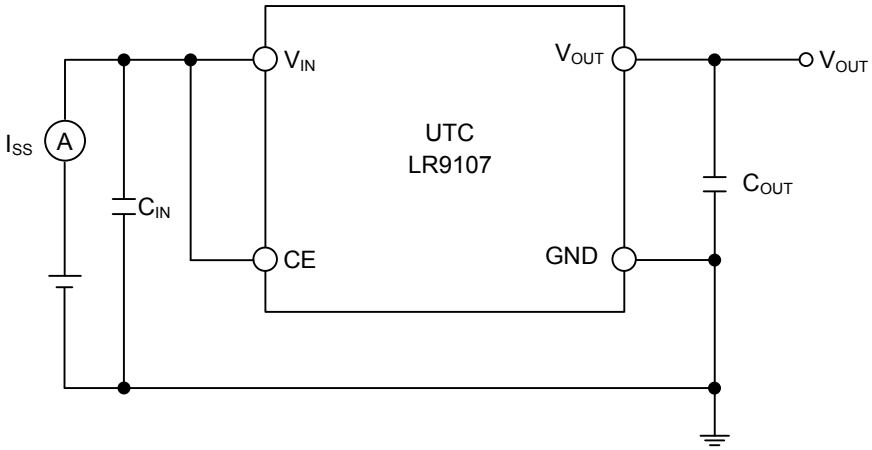

Test Circuit for Supply Current

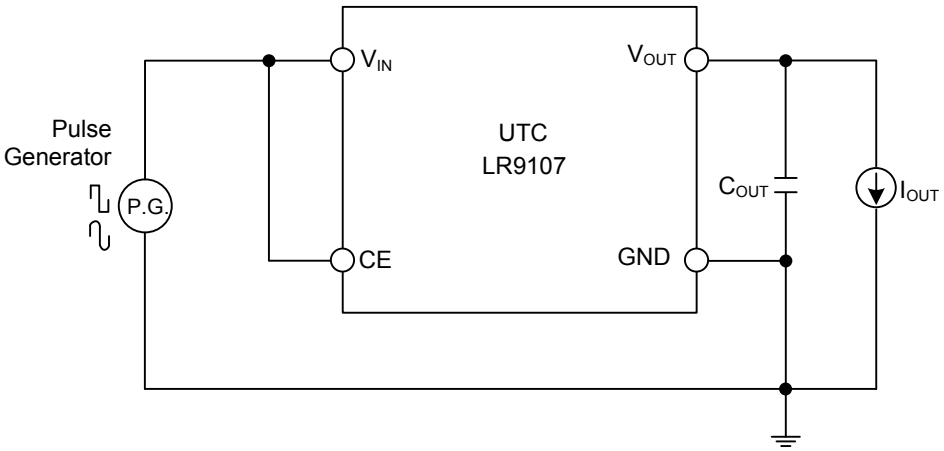

Test Circuit for Ripple Rejection

■ TEST CIRCUITS (Cont.)

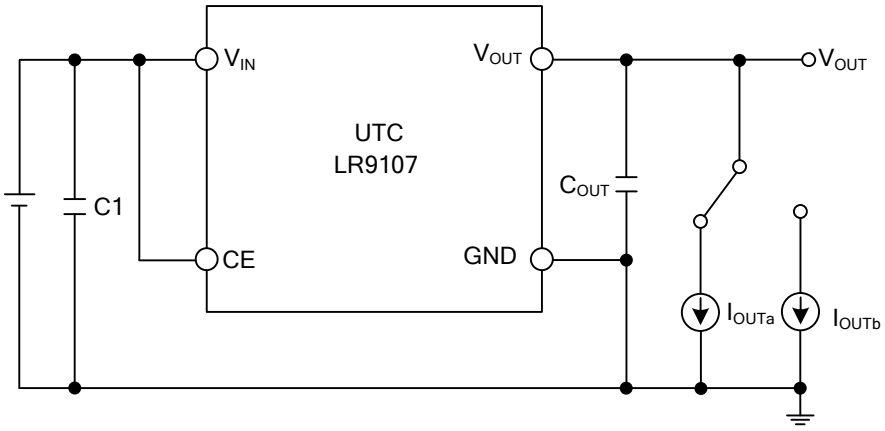

Test Circuit for Load Transient Response

■ TYPICAL APPLICATION CIRCUIT

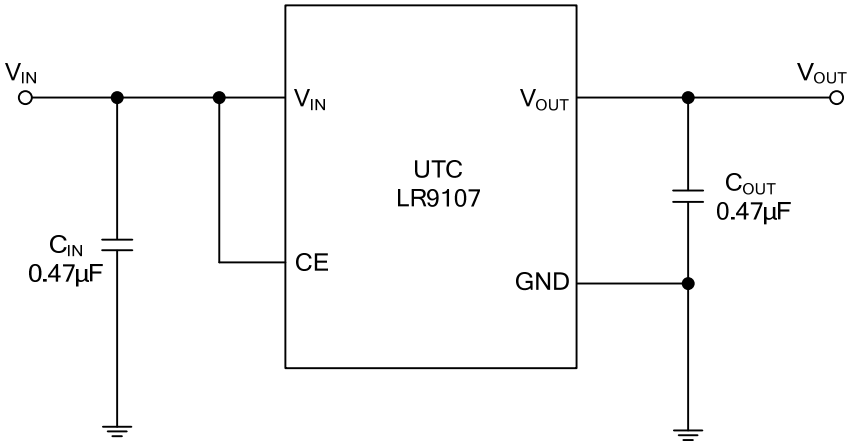

UTC assumes no responsibility for equipment failures that result from using products at values that exceed, even momentarily, rated values (such as maximum ratings, operating condition ranges, or other parameters) listed in products specifications of any and all UTC products described or contained herein. UTC products are not designed for use in life support appliances, devices or systems where malfunction of these products can be reasonably expected to result in personal injury. Reproduction in whole or in part is prohibited without the prior written consent of the copyright owner. The information presented in this document does not form part of any quotation or contract, is believed to be accurate and reliable and may be changed without notice.