# LR78MXX

## 3-Terminal 0.5A Positive Voltage Regulator

### Features

- Output Current up to 0.5A
- Output Voltages of 5, 6, 8, 12, 15, 18, 24V
- Thermal Overload Protection
- Short Circuit Protection
- Output Transistor Safe Operating Area (SOA)Protection

### Description

The LR78MXX series of three-terminal positive regulators are available in the TO-220/D-PAK package with several fixed output voltages making it useful in a wide range of applications.

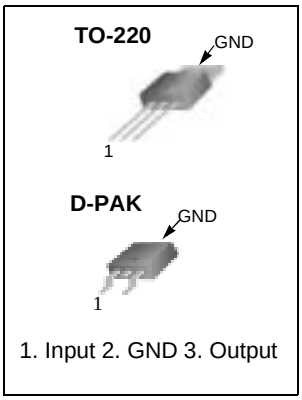


### Internal Block Digram

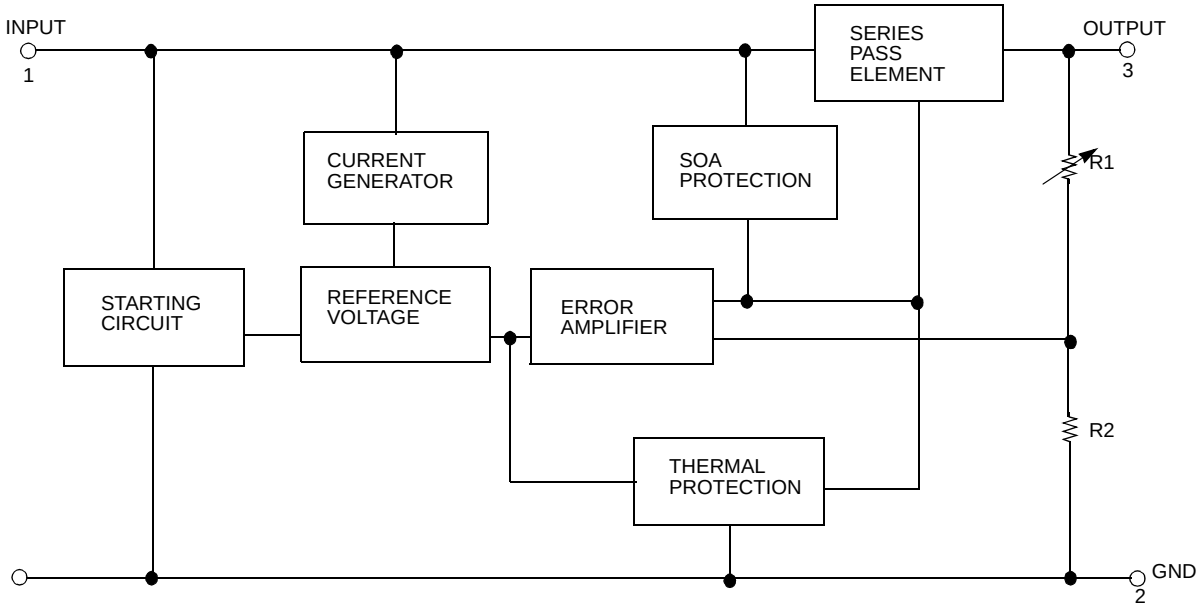

## Absolute Maximum Ratings

| Parameter | Symbol | Value | Unit |
|---|---|---|---|
| Input Voltage (for $V_O$ = 5V to 18V)<br>(for $V_O$ = 24V) | $V_I$<br>$V_I$ | 35<br>40 | V<br>V |
| Thermal Resistance Junction-Case (Note1)<br>TO-220 (Tc = +25°C) | $R_{\theta JC}$ | 2.5 | °C/W |
| Thermal Resistance Junction-Air (Note1, 2)<br>TO-220 (Ta = +25°C)<br>D-PAK (Ta = +25°C) | $R_{\theta JA}$ | 66<br>92 | °C/W |
| Operating Junction Temperature Range | $T_{OPR}$ | 0 ~ +150 | °C |
| Storage Temperature Range | $T_{STG}$ | -65 ~ +150 | °C |

**Note:**

1. Thermal resistance test board
   Size: 76.2mm * 114.3mm * 1.6mm(1S0P)
   JEDEC standard: JESD51-3, JESD51-7
2. Assume no ambient airflow

## Electrical Characteristics (LR78M05)

(Refer to the test circuits, $0 \leq T_J \leq +125°C$, $I_O$=350mA, $V_I$=10V, unless otherwise specified, $C_I$ = 0.33μF, $C_O$=0.1μF)

| Parameter | Symbol | Conditions | | Min. | Typ. | Max. | Unit |
|---|---|---|---|---|---|---|---|
| Output Voltage | $V_O$ | $T_J$ = +25°C | | 4.8 | 5 | 5.2 | V |
| | | $I_O$ = 5mA to 350mA<br>$V_I$ = 7V to 20V | | 4.75 | 5 | 5.25 | |
| Line Regulation (Note3) | $\Delta V_O$ | $I_O$ = 200mA<br>$T_J$ =+25°C | $V_I$ = 7V to 25V | - | - | 100 | mV |
| | | | $V_I$ = 8V to 25V | - | - | 50 | |
| Load Regulation (Note3) | $\Delta V_O$ | $I_O$ = 5mA to 0.5A, $T_J$ =+25°C | | - | - | 100 | mV |
| | | $I_O$ = 5mA to 200mA, $T_J$ =+25 °C | | - | - | 50 | |
| Quiescent Current | $I_Q$ | $T_J$ =+25°C | | - | 4.0 | 6.0 | mA |
| Quiescent Current Change | $\Delta I_Q$ | $I_O$ = 5mA to 350mA | | - | - | 0.5 | mA |
| | | $I_O$ = 200mA<br>$V_I$ = 8V to 25V | | - | - | 0.8 | |
| Output Voltage Drift | $\Delta V/\Delta T$ | $I_O$ = 5mA<br>$T_J$ = 0 to +125°C | | - | -0.5 | - | mV/°C |
| Output Noise Voltage | $V_N$ | f = 10Hz to 100kHz | | - | 40 | - | μV/Vo |
| Ripple Rejection | RR | f = 120Hz, $I_O$ = 300mA<br>$V_I$ = 8V to 18V, $T_J$ =+25 °C | | - | 80 | - | dB |
| Dropout Voltage | $V_D$ | $T_J$ =+25°C, $I_O$ = 500mA | | - | 2 | - | V |
| Short Circuit Current | $I_{SC}$ | $T_J$ =+25°C, $V_I$ = 35V | | - | 300 | - | mA |
| Peak Current | $I_{PK}$ | $T_J$ =+25°C | | - | 700 | - | mA |

**Note:**

3. Load and line regulation are specified at constant junction temperature. Change in $V_O$ due to heating effects must be taken into account separately. Pulse testing with low duty is used.

## Electrical Characteristics (LR78M06) (Continued)

(Refer to the test circuits, $0 \leq T_J \leq +125°C$, $I_O$=350mA, $V_I$ =11V, unless otherwise specified, $C_I$=0.33μF, $C_O$=0.1μF)

| Parameter | Symbol | Conditions | | Min. | Typ. | Max. | Unit |
|---|---|---|---|---|---|---|---|
| Output Voltage | $V_O$ | $T_J$ = +25°C | | 5.75 | 6 | 6.25 | V |
| | | $I_O$ = 5mA to 350mA<br>$V_I$ = 8V to 21V | | 5.7 | 6 | 6.3 | |
| Line Regulation (Note1) | $\Delta V_O$ | $I_O$ = 200mA<br>$T_J$ = +25°C | $V_I$ = 8V to 25V | - | - | 100 | mV |
| | | | $V_I$ = 9V to 25V | - | - | 50 | |
| Load Regulation (Note1) | $\Delta V_O$ | $I_O$ = 5mA to 0.5A, $T_J$ = +25°C | | - | - | 120 | mV |
| | | $I_O$ = 5mA to 200mA, $T_J$ = +25°C | | - | - | 60 | |
| Quiescent Current | $I_Q$ | $T_J$ = +25°C | | - | 4.0 | 6.0 | mA |
| Quiescent Current Change | $\Delta I_Q$ | $I_O$ = 5mA to 350mA | | - | - | 0.5 | mA |
| | | $I_O$ = 200mA<br>$V_I$ = 9V to 25V | | - | - | 0.8 | |
| Output Voltage Drift | $\Delta V/\Delta T$ | $I_O$ = 5mA<br>$T_J$ = 0 to +125°C | | - | -0.5 | - | mV/°C |
| Output Noise Voltage | $V_N$ | f = 10Hz to 100kHz | | - | 45 | - | μV/Vo |
| Ripple Rejection | RR | f = 120Hz, $I_O$ = 300mA<br>$V_I$ = 9V to 19V, $T_J$ =+25 °C | | - | 80 | - | dB |
| Dropout Voltage | $V_D$ | $T_J$ =+25°C, $I_O$ = 500mA | | - | 2 | - | V |
| Short Circuit Current | $I_{SC}$ | $T_J$ = +25°C, $V_I$= 35V | | - | 300 | - | mA |
| Peak Current | $I_{PK}$ | $T_J$ =+25°C | | - | 700 | - | mA |

**Note:**

1. Load and line regulation are specified at constant junction temperature. Change in $V_O$ due to heating effects must be taken into account separately. Pulse testing with low duty is used.

## Electrical Characteristics (LR78M08) (Continued)

(Refer to the test circuits, $0 \leq T_J \leq +125°C$, $I_O$=350mA, $V_I$=14V, unless otherwise specified, $C_I$ = 0.33μF, $C_O$=0.1μF)

| Parameter | Symbol | Conditions | | Min. | Typ. | Max. | Unit |
|---|---|---|---|---|---|---|---|
| Output Voltage | $V_O$ | $T_J$ =+25°C | | 7.7 | 8 | 8.3 | V |
| | | $I_O$ = 5mA to 350mA<br>$V_I$ = 10.5V to 23V | | 7.6 | 8 | 8.4 | |
| Line Regulation (Note1) | $\Delta V_O$ | $I_O$ = 200mA<br>$T_J$ =+25°C | $V_I$ = 10.5V to 25V | - | - | 100 | mV |
| | | | $V_I$ = 11V to 25V | - | - | 50 | |
| Load Regulation (Note1) | $\Delta V_O$ | $I_O$ = 5mA to 0.5A, $T_J$ =+25°C | | - | - | 160 | mV |
| | | $I_O$ = 5mA to 200mA, $T_J$ =+25°C | | - | - | 80 | |
| Quiescent Current | $I_Q$ | $T_J$ = +25°C | | - | 4.0 | 6.0 | mA |
| Quiescent Current Change | $\Delta I_Q$ | $I_O$ = 5mA to 350mA | | - | - | 0.5 | mA |
| | | $I_O$ = 200mA<br>$V_I$ = 10.5V to 25V | | - | - | 0.8 | |
| Output Voltage Drift | RR | $I_O$ = 5mA<br>$T_J$ = 0 to +125°C | | - | –0.5 | - | mV/°C |
| Output Noise Voltage | $V_N$ | f = 10Hz to 100kHz | | - | 52 | - | μV/Vo |
| Ripple Rejection | RR | f = 120Hz, $I_O$ = 300mA<br>$V_I$ = 11.5V to 21.5V, $T_J$ =+25 °C | | - | 80 | - | dB |
| Dropout Voltage | $V_D$ | $T_J$ = +25°C, $I_O$ = 500mA | | - | 2 | - | V |
| Short Circuit Current | $I_{SC}$ | $T_J$ = +25°C, $V_I$ = 35V | | - | 300 | - | mA |
| Peak Current | $I_{PK}$ | $T_J$ = +25°C | | - | 700 | - | mA |

**Note:**

1. Load and line regulation are specified at constant junction temperature. Change in $V_O$ due to heating effects must be taken into account separately. Pulse testing with low duty is used.

## Electrical Characteristics (LR78M12) (Continued)

(Refer to the test circuits, $0 \leq T_J \leq +125°C$, $I_O$=350mA, $V_I$=19V, unless otherwise specified, $C_I$ =0.33µF, $C_O$=0.1µF)

| Parameter | Symbol | Conditions | | Min. | Typ. | Max. | Unit |
|---|---|---|---|---|---|---|---|
| Output Voltage | $V_O$ | $T_J$ = +25°C | | 11.5 | 12 | 12.5 | V |
| | | $I_O$ = 5mA to 350mA<br>$V_I$ = 14.5V to 27V | | 11.4 | 12 | 12.6 | |
| Line Regulation (Note1) | $\Delta V_O$ | $I_O$ = 200mA<br>$T_J$ = +25°C | $V_I$ = 14.5V to 30V | - | - | 100 | mV |
| | | | $V_I$ = 16V to 30V | - | - | 50 | |
| Load Regulation (Note1) | $\Delta V_O$ | $I_O$ = 5mA to 0.5A, $T_J$ = +25°C | | - | - | 240 | mV |
| | | $I_O$ = 5mA to 200mA, $T_J$ = +25°C | | - | - | 120 | |
| Quiescent Current | $I_Q$ | $T_J$ =+25°C | | - | 4.1 | 6.0 | mA |
| Quiescent Current Change | $\Delta I_Q$ | $I_O$ = 5mA to 350mA | | - | - | 0.5 | mA |
| | | $I_O$ = 200mA<br>$V_I$ = 14.5V to 30V | | - | - | 0.8 | |
| Output Voltage Drift | $\Delta V/\Delta T$ | $I_O$ = 5mA<br>$T_J$ = 0 to +125°C | | - | -0.5 | - | mV/°C |
| Output Noise Voltage | $V_N$ | f = 10Hz to 100kHz | | - | 75 | - | µV/Vo |
| Ripple Rejection | RR | f = 120Hz, $I_O$ = 300mA<br>$V_I$ = 15V to 25V, $T_J$ =+25 °C | | - | 80 | - | dB |
| Dropout Voltage | $V_D$ | $T_J$ =+25°C, $I_O$ = 500mA | | - | 2 | - | V |
| Short Circuit Current | $I_{SC}$ | $T_J$ = +25°C, $V_I$ = 35V | | - | 300 | - | mA |
| Peak Current | $I_{PK}$ | $T_J$ = +25°C | | - | 700 | - | mA |

**Note:**

1. Load and line regulation are specified at constant junction temperature. Change in $V_O$ due to heating effects must be taken into account separately. Pulse testing with low duty is used.

## Electrical Characteristics (LR78M15) (Continued)

(Refer to the test circuits, $0 \leq T_J \leq +125°C$, $I_O$=350mA, $V_I$=23V, unless otherwise specified, $C_I$ =0.33μF, $C_O$=0.1μF)

| Parameter | Symbol | Conditions | | Min. | Typ. | Max. | Unit |
|---|---|---|---|---|---|---|---|
| Output Voltage | $V_O$ | $T_J$ = +25°C | | 14.4 | 15 | 15.6 | V |
| | | $I_O$ = 5mA to 350mA<br>$V_I$ = 17.5V to 30V | | 14.25 | 15 | 15.75 | |
| Line Regulation (Note1) | $\Delta V_O$ | $I_O$ = 200mA<br>$T_J$ =+25°C | $V_I$ = 17.5V to 30V | - | - | 100 | mV |
| | | | $V_I$ = 20V to 30V | - | - | 50 | |
| Load Regulation (Note1) | $\Delta V_O$ | $I_O$ = 5mA to 0.5A, $T_J$ =+25°C | | - | - | 300 | mV |
| | | $I_O$ = 5mA to 200mA, $T_J$ =+25°C | | - | - | 150 | |
| Quiescent Current | $I_Q$ | $T_J$ = +25°C | | - | 4.1 | 6.0 | mA |
| Quiescent Current Change | $\Delta I_Q$ | $I_O$ = 5mA to 350mA | | - | - | 0.5 | mA |
| | | $I_O$ = 200mA<br>$V_I$ = 17.5V to 30V | | - | - | 0.8 | |
| Output Voltage Drift | $\Delta V/\Delta T$ | $I_O$ = 5mA<br>$T_J$ = 0 to +125°C | | - | -1 | - | mV/°C |
| Output Noise Voltage | $V_N$ | f = 10Hz to 100kHz | | - | 100 | - | μV/Vo |
| Ripple Rejection | RR | f = 120Hz, $I_O$ = 300mA<br>$V_I$ = 18.5V to 28.5V, $T_J$ =+25 °C | | - | 70 | - | dB |
| Dropout Voltage | $V_D$ | $T_J$ =+25°C, $I_O$ = 500mA | | - | 2 | - | V |
| Short Circuit Current | $I_{SC}$ | $T_J$ = +25°C, $V_I$ = 35V | | - | 300 | - | mA |
| Peak Current | $I_{PK}$ | $T_J$ = +25°C | | - | 700 | - | mA |

**Note:**

1. Load and line regulation are specified at constant junction temperature. Change in $V_O$ due to heating effects must be taken into account separately. Pulse testing with low duty is used.

## Electrical Characteristics (LR78M18) (Continued)

(Refer to the test circuits, $0 \leq T_J \leq +125°C$, $I_O$=350mA, $V_I$=26V, unless otherwise specified, $C_I$ =0.33μF, $C_O$=0.1μF)

| Parameter | Symbol | Conditions | | Min. | Typ. | Max. | Unit |
|---|---|---|---|---|---|---|---|
| Output Voltage | $V_O$ | $T_J$ = +25°C | | 17.3 | 18 | 18.7 | V |
| | | $I_O$ = 5mA to 350mA<br>$V_I$ = 20.5V to 33V | | 17.1 | 18 | 18.9 | |
| Line Regulation (Note1) | $\Delta V_O$ | $I_O$ = 200mA<br>$T_J$ = +25°C | $V_I$ = 21V to 33V | - | - | 100 | mV |
| | | | $V_I$ = 24V to 33V | - | - | 50 | |
| Load Regulation (Note1) | $\Delta V_O$ | $I_O$ = 5mA to 0.5A, $T_J$ = +25°C | | - | - | 360 | mV |
| | | $I_O$ = 5mA to 200mA, $T_J$ = +25°C | | - | - | 180 | |
| Quiescent Current | $I_Q$ | $T_J$ = +25°C | | - | 4.2 | 6.0 | mA |
| Quiescent Current Change | $\Delta I_Q$ | $I_O$ = 5mA to 350mA | | - | - | 0.5 | mA |
| | | $I_O$ = 200mA<br>$V_I$ = 21V to 33V | | - | - | 0.8 | |
| Output Voltage Drift | $\Delta V/\Delta T$ | $I_O$ = 5mA$T_J$ = 0 to 125°C | | - | -1.1 | - | mV/°C |
| Output Noise Voltage | $V_N$ | f = 10Hz to 100kHz | | - | 100 | - | μV/Vo |
| Ripple Rejection | RR | f = 120Hz, $I_O$= 300mA , $V_I$ = 22V to 32V<br>$T_J$ =+25 °C | | - | 70 | - | dB |
| Dropout Voltage | $V_D$ | $T_J$ = +25°C, $I_O$ = 500mA | | - | 2 | - | V |
| Short Circuit Current | $I_{SC}$ | $T_J$ = +25°C, $V_I$ = 35V | | - | 300 | - | mA |
| Peak Current | $I_{PK}$ | $T_J$ = +25°C | | - | 700 | - | mA |

**Note:**

1. Load and line regulation are specified at constant junction temperature. Change in $V_O$ due to heating effects must be taken into account separately. Pulse testing with low duty is used.

## Electrical Characteristics (LR78M24) (Continued)

(Refer to the test circuits, $0 \leq T_J \leq +125°C$, $I_O$=350mA, $V_I$=33V, unless otherwise specified, $C_I$ =0.33μF, $C_O$=0.1μF)

| Parameter | Symbol | Conditions | | Min. | Typ. | Max. | Unit |
|---|---|---|---|---|---|---|---|
| Output Voltage | $V_O$ | $T_J$ =+25°C | | 23 | 24 | 25 | V |
| | | $I_O$ = 5mA to 350mA<br>$V_I$ = 27V to 38V | | 22.8 | 24 | 25.2 | |
| Line Regulation (Note1) | $\Delta V_O$ | $I_O$ = 200mA<br>$T_J$ =+25°C | $V_I$ = 27V to 38V | - | - | 100 | mV |
| | | | $V_I$ = 28V to 38V | - | - | 50 | |
| Load Regulation (Note1) | $\Delta V_O$ | $I_O$ = 5mA to 0.5A, $T_J$ =+25°C | | - | - | 480 | mV |
| | | $I_O$ = 5mA to 200mA, $T_J$ =+25°C | | - | - | 240 | |
| Quiescent Current | $I_Q$ | $T_J$ = +25°C | | - | 4.2 | 6.0 | mA |
| Quiescent Current Change | $\Delta I_Q$ | $I_O$ = 5mA to 350mA | | - | - | 0.5 | mA |
| | | $I_O$ = 200mA<br>$V_I$ = 27V to 38V | | - | - | 0.8 | |
| Output Voltage Drift | $\Delta V/\Delta T$ | $I_O$ = 5mA<br>$T_J$ = 0 to +125°C | | - | -1.2 | - | mV/°C |
| Output Noise Voltage | $V_N$ | f = 10Hz to 100kHz | | - | 170 | - | μV/Vo |
| Ripple Rejection | RR | f = 120Hz, $I_O$ = 300mA<br>$V_I$ = 28V to 38V, $T_J$ =+25 °C | | - | 70 | - | dB |
| Dropout Voltage | $V_D$ | $T_J$ = +25°C, $I_O$ = 500mA | | - | 2 | - | V |
| Short Circuit Current | $I_{SC}$ | $T_J$ = +25°C, $V_I$ = 35V | | - | 300 | - | mA |
| Peak Current | $I_{PK}$ | $T_J$ = +25°C | | - | 700 | - | mA |

**Note:**

1. Load and line regulation are specified at constant junction temperature. Change in $V_O$ due to heating effects must be taken into account separately. Pulse testing with low duty is used.

## Mechanical Dimensions

### Package

**Dimensions in millimeters**

# TO-220

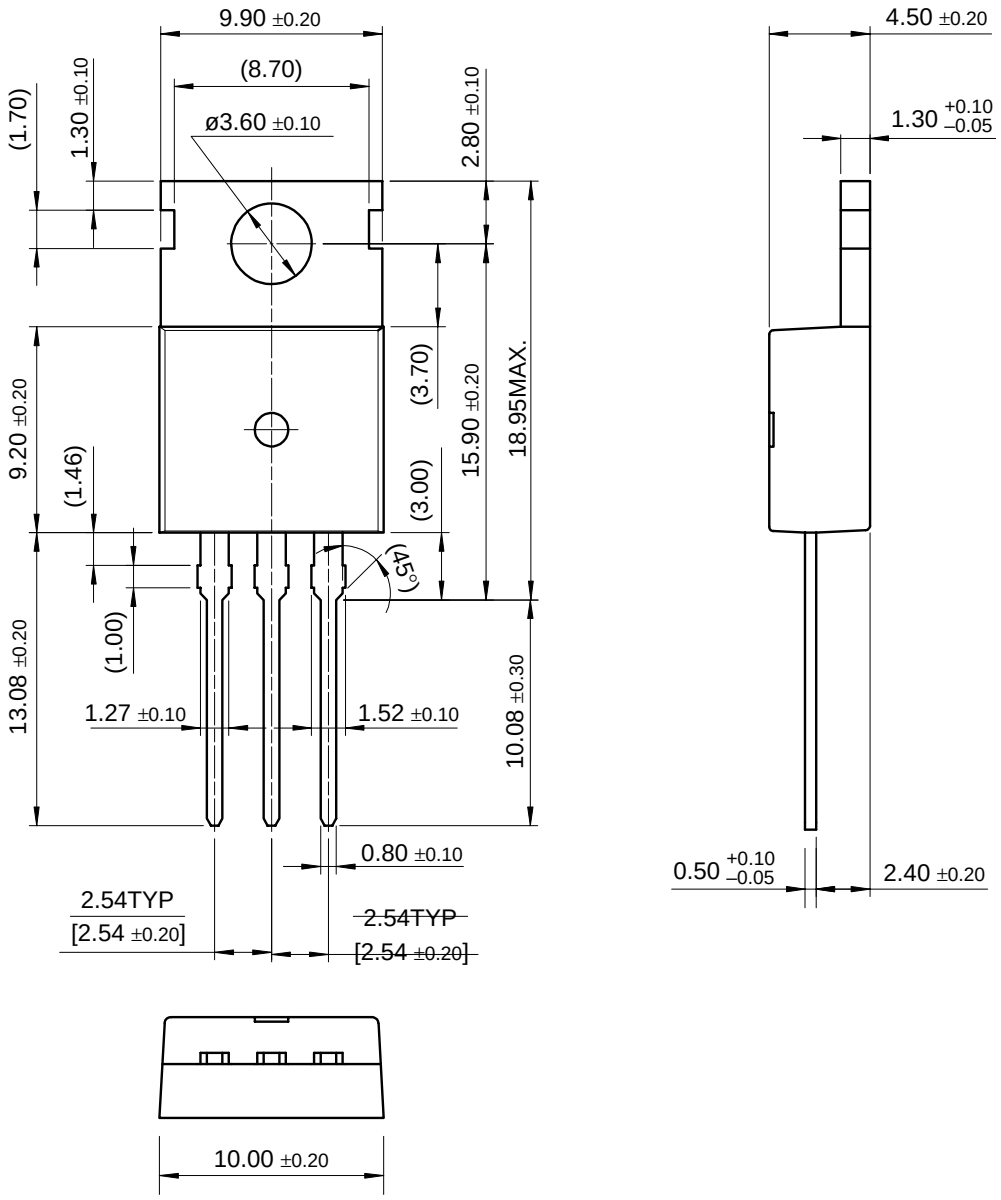

## Mechanical Dimensions (Continued)

**Package**

**Dimensions in millimeters**

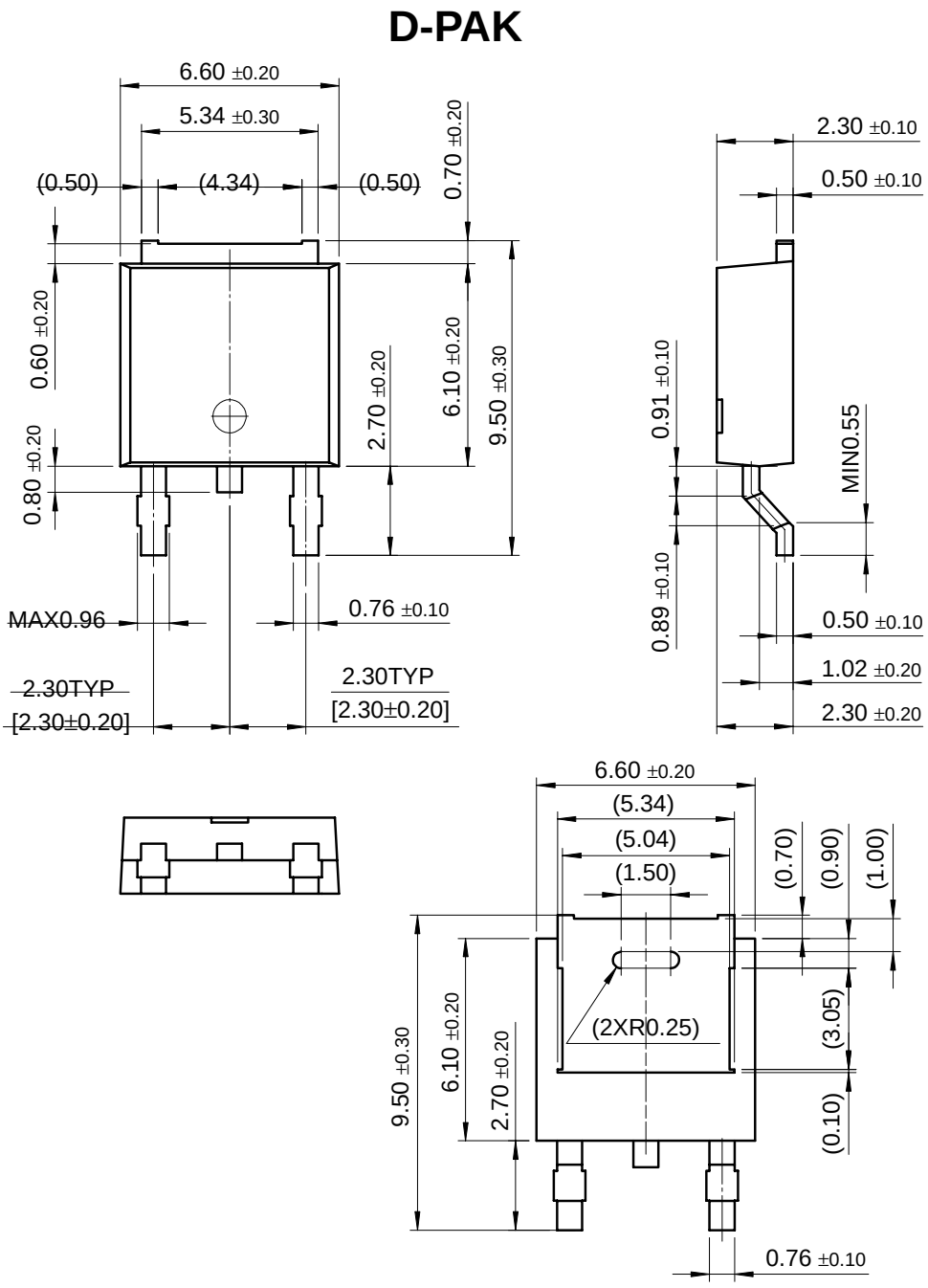

## Ordering Information

| Product Number | Package | Operating Temperature |
|---|---|---|
| LR78M05CT | TO-220 | 0 ~ +125°C |
| LR78M06CT | | |
| LR78M08CT | | |
| LR78M12CT | | |
| LR78M15CT | | |
| LR78M18CT | | |
| LR78M24CT | | |
| LR78M05CDT | D-PAK | |
| LR78M06CDT | | |
| LR78M08CDT | | |
| LR78M12CDT | | |