Ultra Fast High PSRR
Low Noise CMOS Voltage Regulator

LR6200 Series

■ INTRODUCTION

The LR6200 series are a group of positive voltage regulators manufactured by CMOS technologies with high ripple rejection, ultra low noise, low power consumption and low dropout voltage, which can prolong battery life in portable electronics. The LR6200 series work with low-ESR ceramic capacitors, reducing the amount of board space necessary for power applications. The LR6200 series consume less than 0.1μA in shutdown mode and have fast turn-on time less than 50μS.The series are very suitable for the battery-powered equipments, such as RF applications and other systems requiring a quiet voltage source.

■ FEATURES

- Low Output Noise：40μV_{RMS} (10Hz~100kHz)
- Low Dropout Voltage：150mV@150mA
- Low Quiescent Current：50μA
- High Ripple Rejection：75dB@1kHz
- Excellent Line and Load Transient Response
- Operating Voltage Range：2.0V～6.0V
- Output Voltage Range：1.0V ~ 5.0V
- High Accuracy：±2%（Typ.）
- Built-in Current Limiter, Short-Circuit Protection
- TTL- Logic-Controlled Shutdown Input

■ APPLICATIONS

- Cellular and Smart Phones
- Laptop, Palmtops and PDA
- Digital Still and Video Cameras
- MP3, MP4 Player
- Radio control systems
- Battery-Powered Equipmen

■ BLOCK DIAGRAM

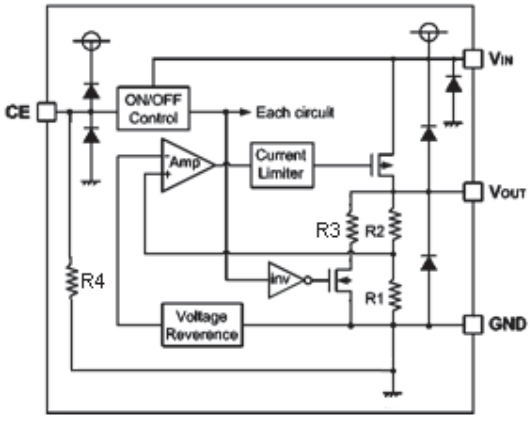

■ ORDER INFORMATION

LR6200①②③④

DESIGNATOR	SYMBOL	DESCRIPTION
①	A	Standard
	B	High Active, pull-down resistor R4 built in, with C_{OUT} discharge resistor
	C	High Active, No pull-down resistor , No C_{OUT} discharge resistor
②③	Integer	Output Voltage e.g.1.8V=②:1, ③:8
④	M/MA/MC/MY	Package:SOT-23-3
	M/MF/ML	Package:SOT-23-5
	U	Package:SOT-353 (SC70-5)
	P/PT	Package:SOT-89-3/5
	F	Package:DFN1×1-4

■ PIN CONFIGURATION

SOT-23-3

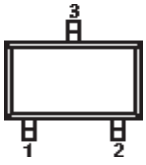

SOT-23-5/
SOT-353(SC70-5)

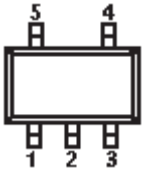

DFN1×1-4

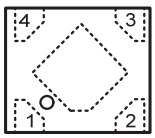

SOT-89-3

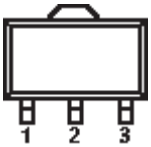

SOT-89-5

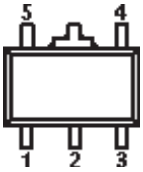

SOT-23-3

PIN NUMBER				PIN NAME	FUNCTION
M	MA	MC	MY		
1	2	3	3	V_{SS}	Ground
2	1	2	1	V_{OUT}	Output
3	3	1	2	V_{IN}	Power Input Pin

SOT-23-5

PIN NUMBER			SYMBOL	FUNCTION
M	MF	ML		
1	1	5	V_{IN}	Power Input Pin
2	2	2	V_{SS}	Ground
3	——	1	CE	Chip Enable Pin
4	3/4	3	NC	No Connection
5	5	4	V_{OUT}	Output Pin

SOT-353(SC70-5)

PIN NUMBER	SYMBOL	FUNCTION
U		
1	V_{IN}	Power Input Pin
2	V_{SS}	Ground
3	CE	Chip Enable Pin
4	NC	No Connection
5	V_{OUT}	Output Pin

DFN1×1-4

PIN NUMBER	SYMBOL	FUNCTION
F		
1	V_{OUT}	Output Pin
2	V_{SS}	Ground
3	CE	Chip Enable Pin
4	V_{IN}	Power Input Pin

SOT-89-3

PIN NUMBER		PIN NAME	FUNCTION
P	PT		
1	2	V_{SS}	Ground
3	1	V_{OUT}	Output
2	3	V_{IN}	Power Input Pin

SOT-89-5

PIN NUMBER	SYMBOL	FUNCTION
P		
1	V_{OUT}	Output Pin
2	V_{SS}	Ground
3	NC	No Connection
4	CE	Chip Enable Pin
5	V_{IN}	Power Input Pin

■ TYPICAL APPLICATION

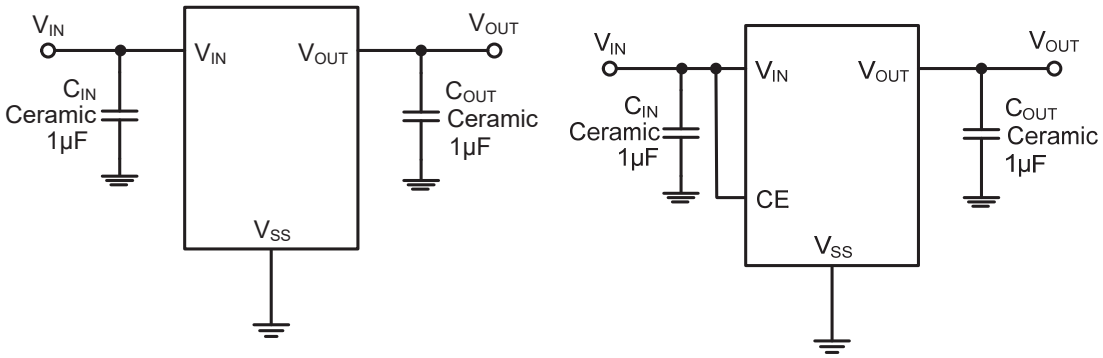

■ ABSOLUTE MAXIMUM RATINGS(1)

(Unless otherwise specified, T_A=25°C)

PARAMETER		SYMBOL	RATINGS	UNITS
Input Voltage(2)		V_{IN}	-0.3~ 7	V
Output Voltage(2)		V_{OUT}	-0.3~V_{IN}+0.3	V
Output Current		I_{OUT}	600	mA
Power Dissipation	SOT-23-3 SOT-23-5	P_D	0.4	W
	SOT-353(SC70-5)		0.4	W
	DFN1X1-4		0.4	W
	SOT-89-3SOT-89-5		0.6	W
	TO-92		0.6	W
Operating free air temperature range		T_A	-40~85	°C
Operating Junction Temperature Range(3)		T_j	-40~125	°C
Storage Temperature		T_{stg}	-40~125	°C
Lead Temperature(Soldering, 10 sec)		T_{solder}	260	°C
ESD rating(4)		Human Body Model -(HBM)	4	kV
		Machine Model- (MM)	200	V

(1) Stresses beyond those listed under *absolute maximum ratings may* cause permanent damage to the device. These are stress ratings only, and functional operation of the device at these or any other conditions beyond those indicated under *recommended operating conditions* is not implied. Exposure to absolute-maximum-rated conditions for extended periods my affect device reliability.

(2) All voltages are with respect to network ground terminal.

(3) This IC includes over temperature protection that is intended to protect the device during momentary overload. Junction temperature will exceed 125°C when over temperature protection is active. Continuous operation above the specified maximum operating junction temperature may impair device reliability.

(4) ESD testing is performed according to the respective JESD22 JEDEC standard.

The human body model is a 100 pF capacitor discharged through a 1.5kΩ resistor into each pin. The machine model is a 200pF capacitor discharged directly into each pin.

■ RECOMMENDED OPERATING CONDITIONS

PARAMETER	MIN.	NOM.	MAX.	UNITS
Supply voltage at V_{IN}	2		6	V
Operating junction temperature range, T_j	0		125	°C
Operating free air temperature range, T_A	0		85	°C

■ ELECTRICAL CHARACTERISTICS

LR6200 Series **(V_{IN}=V_{OUT}+1V, C_{IN}=C_{OUT}=1μF, T_A=25℃,unless otherwise specified)**

PARAMETER		SYMBOL	CONDITIONS	MIN.	TYP. (6)	MAX.	UNITS
Output Voltage		V_{OUT}(E) (7)	I_{OUT}=1mA	V_{OUT}(8) *0.98	V_{OUT}(8)	V_{OUT}(8) *1.02	V
Supply Current		I_{SS}	I_{OUT}=0		50	100	μA
Standby Current		I_{STBY}	CE = V_{SS}			0.1	μA
Output Current		I_{OUT}	—	300			mA
Dropout Voltage		V_{DO}(9)	I_{OUT} =150mA V_{OUT}≥2.8V		150		mV
Load Regulation		ΔV_{OUT}	V_{IN}= V_{OUT} +1V, 1mA≤I_{OUT}≤100mA		10		mV
Line Regulation		$\frac{\Delta V_{OUT}}{V_{OUT} \times \Delta V_{IN}}$	I_{OUT} =10mA V_{OUT} +1V≤V_{IN}≤6V		0.01	0.2	%/V
Output Voltage Temperature Characteristics		$\frac{\Delta V_{OUT}}{\Delta T \times V_{OUT}}$	I_{OUT} =10mA -40≤T≤+85		100		ppm
Short Current		I_{Short}	V_{OUT} =V_{SS}		100		mA
Input Voltage		V_{IN}	—	2.0		6.0	V
Power Supply Rejection Rate	217Hz	PSRR	I_{OUT}=50mA		80		dB
	1kHz				75		
	10kHz				70		
CE "High" Voltage		V_{CE}"H"		1.5		V_{IN}	V
CE "Low" Voltage		V_{CE}"L"				0.3	V
C_{OUT} Auto-Discharge Resistance		$R_{DISCHRG}$	V_{IN}=5V, V_{OUT}=3.0V, V_{CE}=V_{SS}		80		Ω

(6) Typical numbers are at 25°C and represent the most likely norm.

(7) V_{OUT}(E) : Effective Output Voltage (Ie. The output voltage when V_{IN} = (V_{OUT} +1.0V) and maintain a certain I_{OUT} Value).

(8) V_{OUT} : Specified Output Voltage.

(9) V_{DO} : The Difference Of Output Voltage And Input Voltage When Input Voltage Is Decreased Gradually Till Output Voltage Equals To 98% Of V_{OUT} (E).

■ DROPOUT VOLTAGE CHART

Setting Output Voltage	Dropout Voltage(mV)@ I_{OUT}=150mA	
V_{OUT}(V)	Typ.	Max.
1.2	380	600
1.5	270	600
1.8	230	600
2.5	180	400
2.8	160	220
3.0	155	220
3.3	150	220

■ TYPICAL PERFORMANCE CHARACTERISTICS

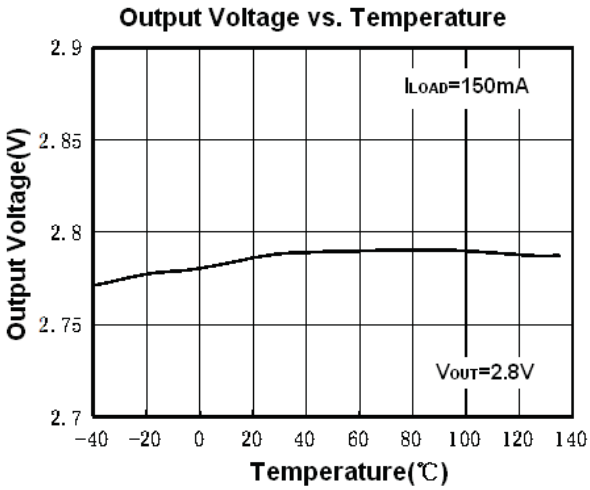

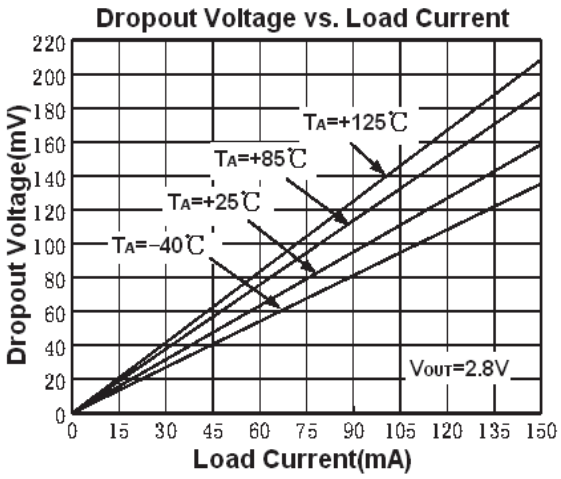

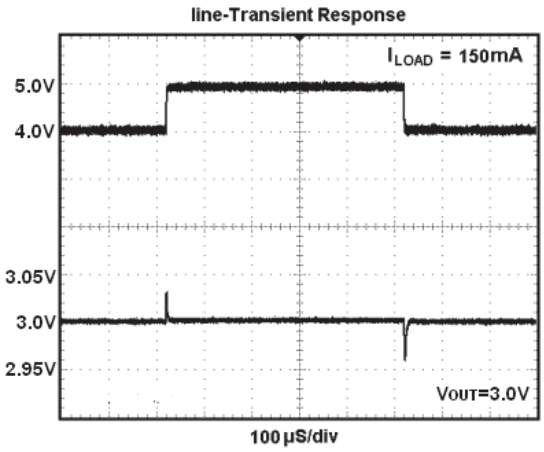

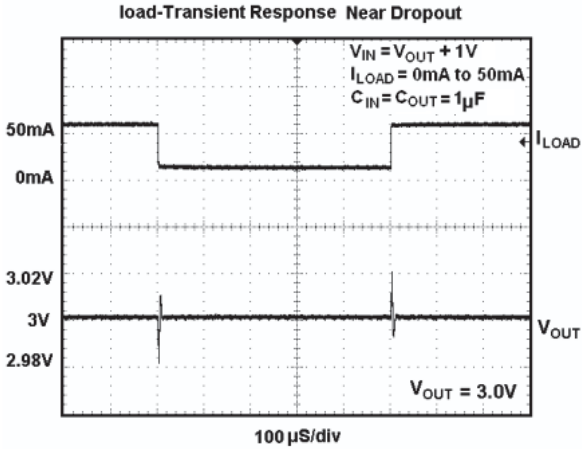

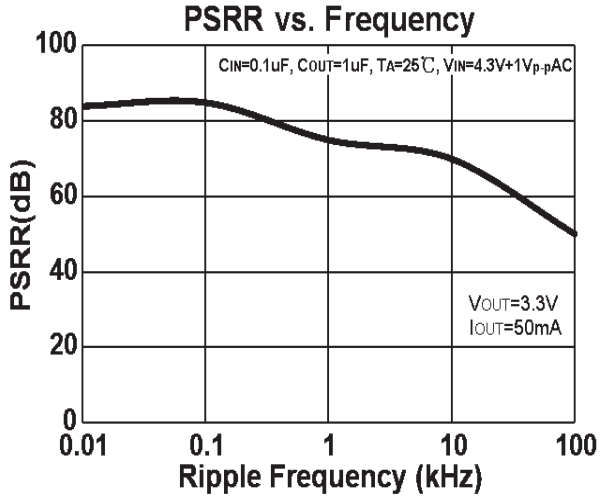

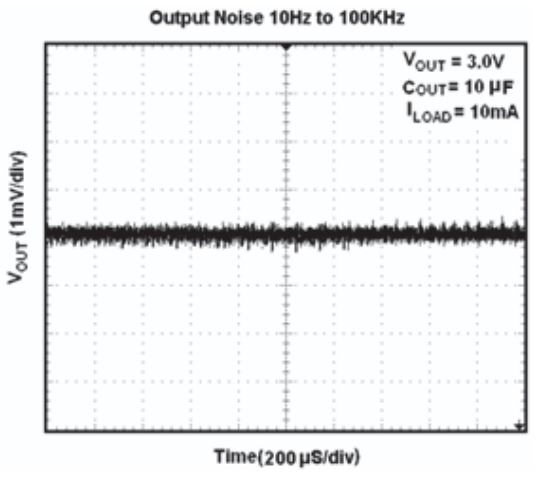

■ TYPICAL PERFORMANCE CHARACTERISTICS

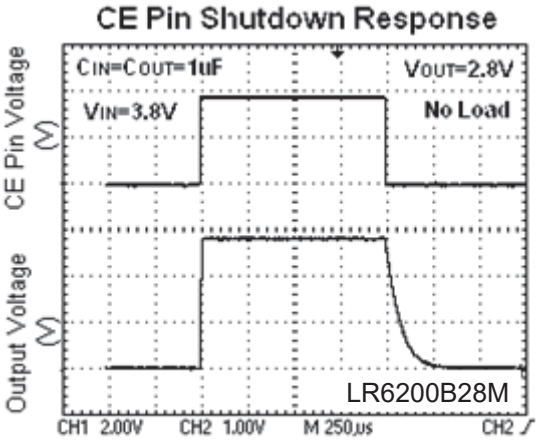

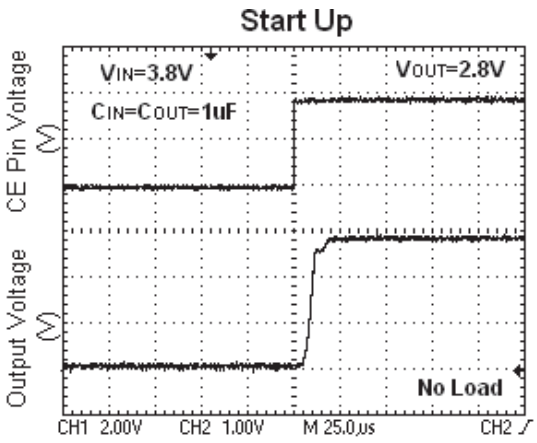

C_{OUT} Auto-Discharge Function

LR6200B series can discharge the electric charge in the output capacitor (C_{OUT}), when a low signal to the CE pin, which enables a whole IC circuit turn off, is inputted via the N-channel transistor located between the V_{OUT} pin and the V_{SS} pin (cf. BLOCK DIAGRAM). The C_{OUT} auto-discharge resistance value is set at 80Ω (V_{OUT}=3.0V @ V_{IN}=5.0V at typical). The discharge time of the output capacitor (C_{OUT}) is set by the C_{OUT} auto-discharge resistance (R) and the output capacitor (C_{OUT}). By setting time constant of a C_{OUT} auto-discharge resistance value [$R_{DISCHRG}$] and an output capacitor value (C_{OUT}) as τ (τ=C x $R_{DISCHRG}$), the output voltage after discharge via the N-channel transistor is calculated by the following formulas.

$$V = V_{OUT(E)} \times e^{-t/\tau}, \text{ or } t=\tau ln (V / V_{OUT(E)})$$

(V : Output voltage after discharge, $V_{OUT(E)}$: Output voltage, t: Discharge time, τ: C_{OUT} auto-discharge resistance $R_{DISCHRG}$×Output capacitor (C_{OUT}) value C)

■ PACKAGING INFORMATION

• SOT-23-3 PACKAGE OUTLINE DIMENSIONS

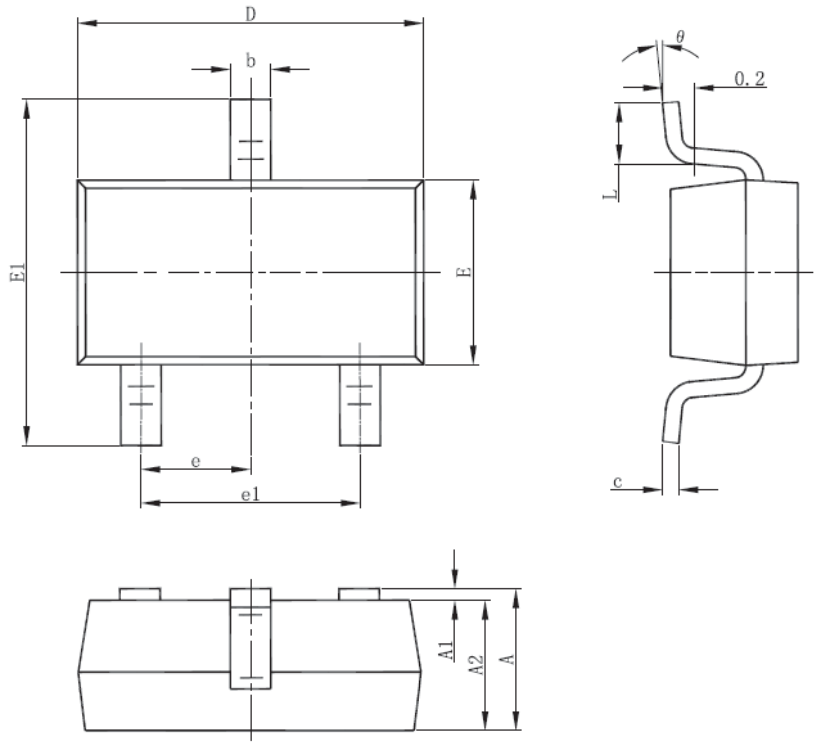

Symbol	Dimensions In Millimeters		Dimensions In Inches	
	Min	Max	Min	Max
A	1.050	1.250	0.041	0.049
A1	0.000	0.100	0.000	0.004
A2	1.050	1.150	0.041	0.045
b	0.300	0.500	0.012	0.020
c	0.100	0.200	0.004	0.008
D	2.820	3.020	0.111	0.119
E	1.500	1.700	0.059	0.067
E1	2.650	2.950	0.104	0.116
e	0.950(BSC)		0.037(BSC)	
e1	1.800	2.000	0.071	0.079
L	0.300	0.600	0.012	0.024
θ	0°	8°	0°	8°

• SOT-23-5 PACKAGE OUTLINE DIMENSIONS

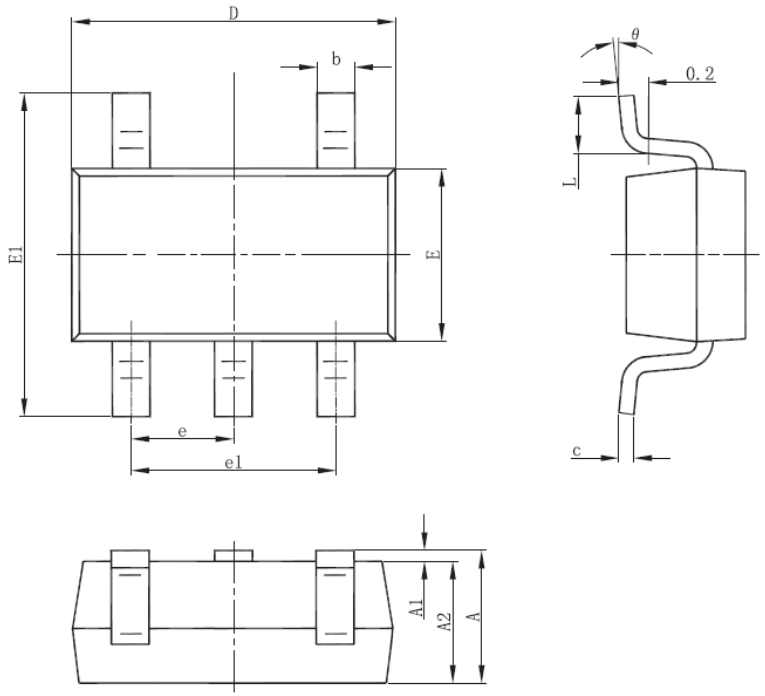

Symbol	Dimensions In Millimeters		Dimensions In Inches	
	Min	Max	Min	Max
A	1.050	1.250	0.041	0.049
A1	0.000	0.100	0.000	0.004
A2	1.050	1.150	0.041	0.045
b	0.300	0.500	0.012	0.020
c	0.100	0.200	0.004	0.008
D	2.820	3.020	0.111	0.119
E	1.500	1.700	0.059	0.067
E1	2.650	2.950	0.104	0.116
e	0.950(BSC)		0.037(BSC)	
e1	1.800	2.000	0.071	0.079
L	0.300	0.600	0.012	0.024
θ	0°	8°	0°	8°

• SOT-353 (SC70-5) PACKAGE OUTLINE DIMENSIONS

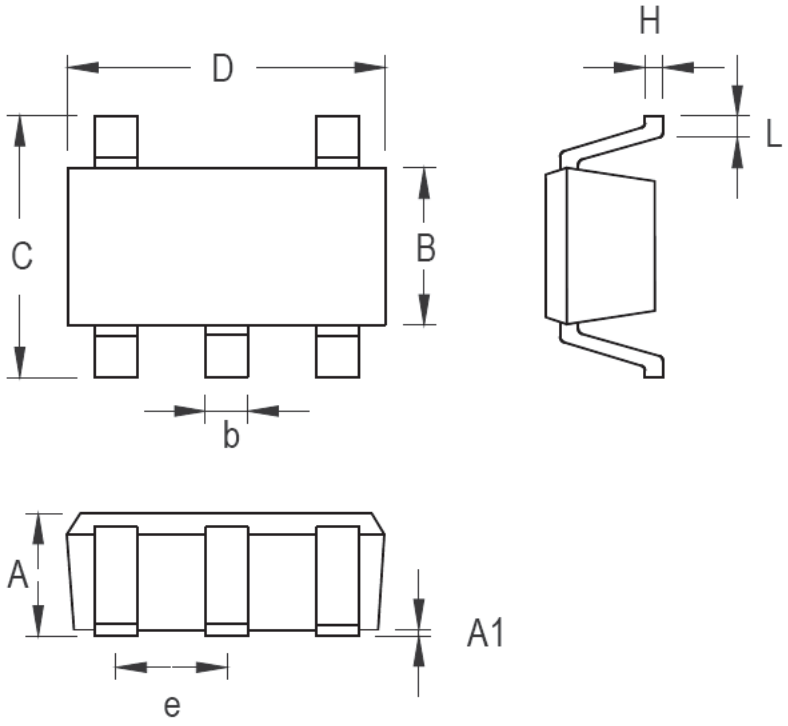

Symbol	Dimensions In Millimeters		Dimensions In Inches	
	Min	Max	Min	Max
A	0.800	1.100	0.031	0.044
A1	0.000	0.100	0.000	0.004
B	1.150	1.350	0.045	0.054
b	0.150	0.400	0.006	0.016
C	1.800	2.450	0.071	0.096
D	1.800	2.250	0.071	0.089
e	0.650		0.026	
H	0.080	0.260	0.003	0.010
L	0.210	0.460	0.008	0.018

- **DFN1×1-4 PACKAGE OUTLINE DIMENSIONS**

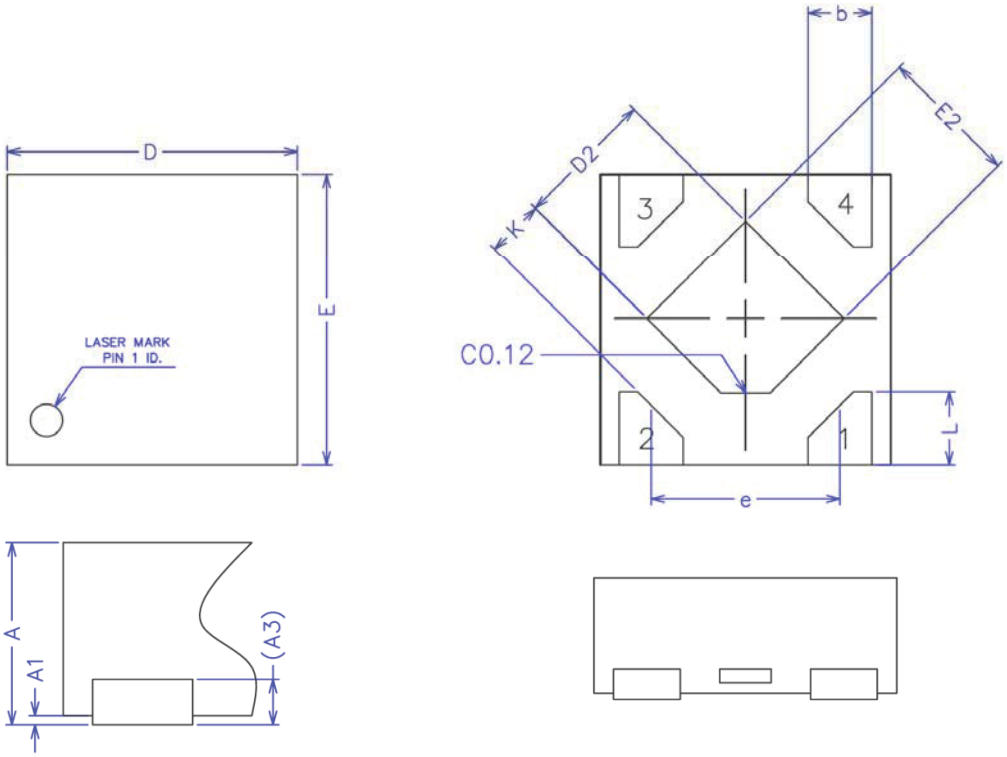

COMMON DIMENSIONS
(UNITS OF MEASURE=MILLIMETER)

SYMBOL	MIN	NOM	MAX
A	0.34	0.37	0.40
A1	0.00	0.02	0.05
A3		0.100REF	
b	0.17	0.22	0.27
D	0.95	1.00	1.05
E	0.95	1.00	1.05
D2	0.43	0.48	0.53
E2	0.43	0.48	0.53
L	0.20	0.25	0.30
e	—	0.65	—
K	0.15	—	—

- **SOT-89-3 PACKAGE OUTLINE DIMENSIONS**

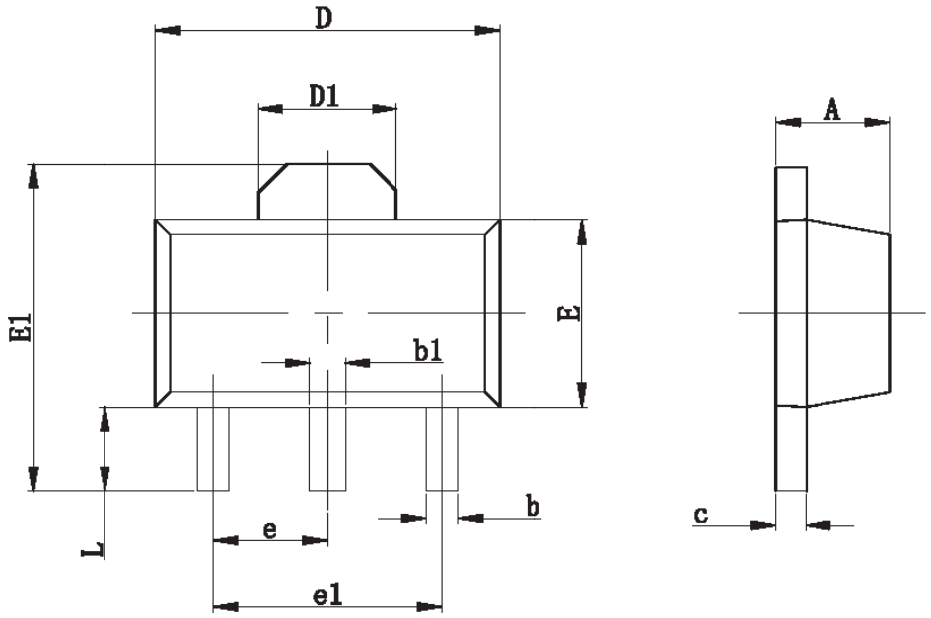

Symbol	Dimensions In Millimeters		Dimensions In Inches	
	Min	Max	Min	Max
A	1.400	1.600	0.055	0.063
b	0.320	0.520	0.013	0.197
b1	0.400	0.580	0.016	0.023
c	0.350	0.440	0.014	0.017
D	4.400	4.600	0.173	0.181
D1	1.550 REF		0.061 REF	
E	2.300	2.600	0.091	0.102
E1	3.940	4.250	0.155	0.167
e	1.500 TYP		0.060TYP	
e1	3.000 TYP		0.118TYP	
L	0.900	1.200	0.035	0.047

- **SOT-89-5 PACKAGE OUTLINE DIMENSIONS**

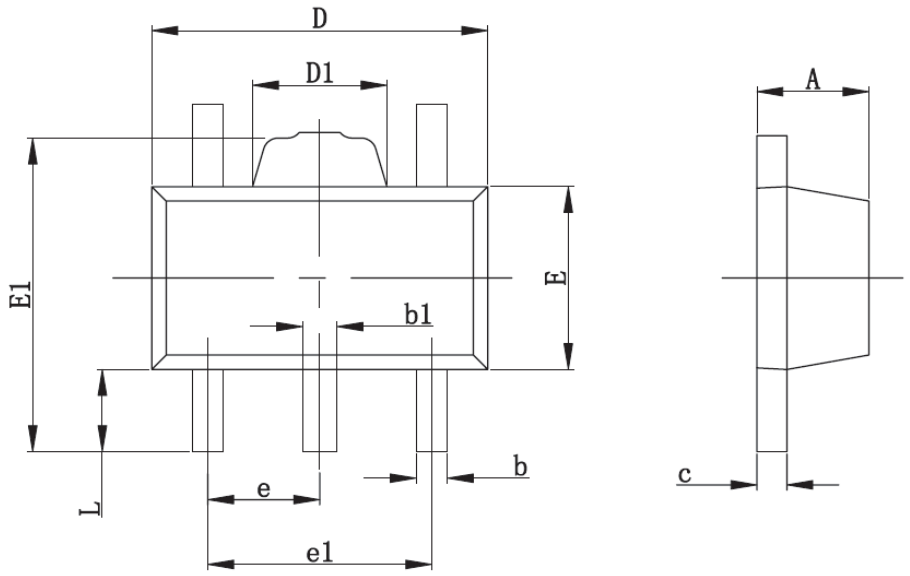

Symbol	Dimensions In Millimeters		Dimensions In Inches	
	Min	Max	Min	Max
A	1.400	1.600	0.055	0.063
b	0.320	0.520	0.013	0.020
b1	0.360	0.560	0.014	0.022
c	0.350	0.440	0.014	0.017
D	4.400	4.600	0.173	0.181
D1	1.400	1.800	0.055	0.071
E	2.300	2.600	0.091	0.102
E1	3.940	4.250	0.155	0.167
e	1.500TYP		0.060TYP	
e1	2.900	3.100	0.114	0.122
L	0.900	1.100	0.035	0.043