LR1102

CMOS IC

LOW NOISE 150mA LDO REGULATOR

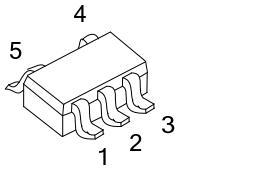

SOT-25

■ DESCRIPTION

The UTC **LR1102** families are CMOS-based voltage regulator ICs with extremely low supply current, high output voltage accuracy, high Ripple Rejection and chip enable circuit.

These ICs performance are excellent and with SOT-25 package, thus these ICs are very suitable for hand-held communication equipment.

■ FEATURES

* Ultra-Low Supply Current : Typ. 35μA
* Standby Mode: Typ. 0.1μA
* Low Dropout Voltage: Typ. 0.2V (I_{OUT} = 100mA)
* Excellent Line Regulation: Typ. 0.05%/V
* High Ripple Rejection: Typ. 70dB (f = 1kHz)

■ ORDERING INFORMATION

Ordering Number	Package	Pin Assignment					Packing
Halogen Free		1	2	3	4	5	
LR1102XG-xx-AF5-R	SOT-25	I	G	C	N	O	Tape Reel

Note: Pin Assignment: I: V_{DD} O: V_{OUT} G: GND C: CE/ $\overline{CE}$ N: No Connection

LR1102xG-xx-AF5-R

(1)Packing Type
(2)Package Type
(3)Output Voltage Code
(4)Green Package
(5)Active

(1) R: Tape Reel
(2) AF5: SOT-25
(3) xx: refer to Marking Information
(4) L: Lead Free, G: Halogen Free and Lead Free
(5) A: Low, B: High

Copyright © 2015 Unisonic Technologies Co., Ltd

■ MARKING INFORMATION

PACKAGE	VOLTAGE CODE	MARKING
LR1102A	25:2.5V 27:2.7V 28:2.8V 2J:2.85V 30:3.0V 33:3.3V 35:3.5V 50:5.0V	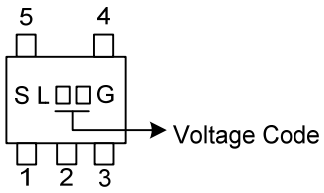
LR1102B	18: 1.8V 25:2.5V 27:2.7V 28:2.8V 2J:2.85V 30:3.0V 33:3.3V 35:3.5V 50:5.0V	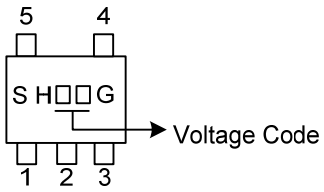

■ PIN DESCRIPTION

PIN NO.	PIN NAME	DESCRIPTION
1	V_{DD}	Input Pin
2	GND	Ground Pin
3	CE/$\overline{CE}$	Chip Enable Pin
4	NC	No Connection
5	V_{OUT}	Output Pin

■ BLOCK DIAGRAM

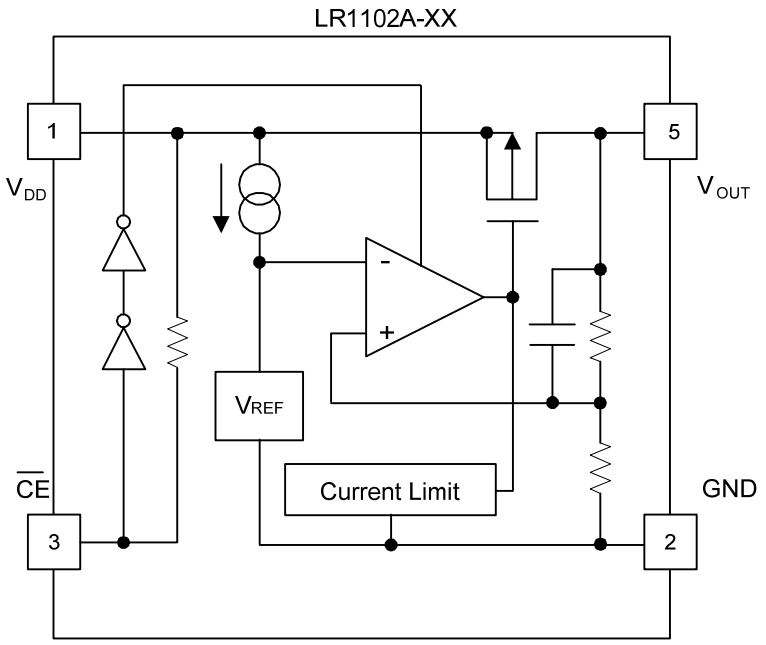

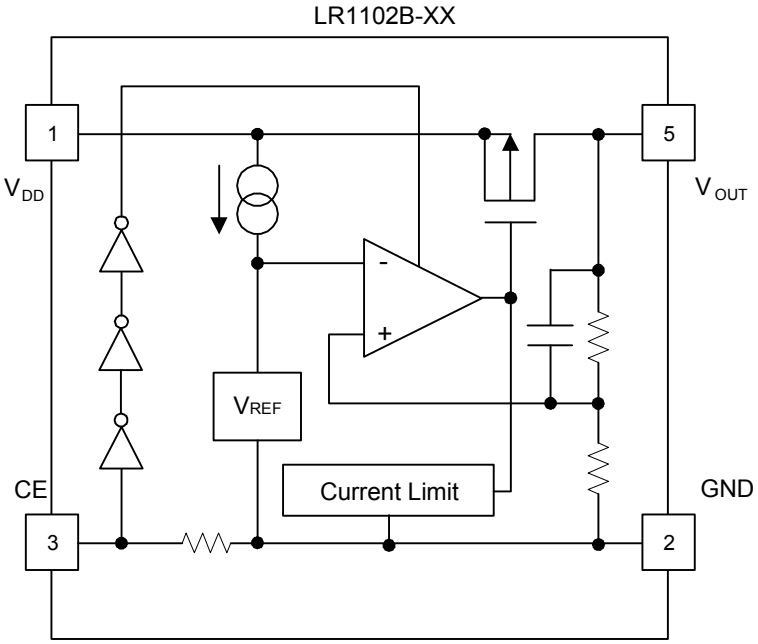

■ ABSOLUTE MAXIMUM RATINGS

PARAMETER	SYMBOL	RATINGS	UNIT
Input Voltage	V_{IN}	9	V
Input Voltage	V_{CE}	-0.3 ~ V_{IN}+0.3	V
Output Voltage	V_{OUT}	-0.3 ~ V_{IN}+0.3	V
Output Current	I_{OUT}	200	mA
Power Dissipation	P_D	250	mW
Junction Temperature	T_J	+125	°C
Operating Temperature	T_{OPR}	-40 ~ +85	°C
Storage Temperature	T_{STG}	-55 ~ +125	°C

Note: Absolute maximum ratings are those values beyond which the device could be permanently damaged. Absolute maximum ratings are stress ratings only and functional device operation is not implied.

■ ELECTRICAL CHARACTERISTICS

LR1102A-XX (T_{OPR}=25°C)

PARAMETER	SYMBOL	TEST CONDITIONS	MIN	TYP	MAX	UNIT
Output Voltage	V_{OUT}	V_{IN}=Set V_{OUT} + 1V, 1mA≤I_{OUT}≤30mA	V_{OUT}x0.98		V_{OUT}x1.02	V
		V_{IN}=Set V_{OUT} + 1V, 0mA≤I_{OUT}≤150mA	V_{OUT}x0.97		V_{OUT}x1.03	V
		V_{IN}=9V, 0mA≤I_{OUT}≤150mA	V_{OUT}x0.97		V_{OUT}x1.03	V
Output Current	I_{OUT}	Refer to the Electrical Characteristics by Output Voltage				
Load Regulation	$\Delta V_{OUT}/\Delta I_{OUT}$	V_{IN}=Set V_{OUT} + 1V, 1mA≤I_{OUT}≤80mA		12	40	mV
Dropout Voltage	V_{DIF}	Refer to the Electrical Characteristics by Output Voltage				
Supply Current	I_{SS}	V_{IN}=Set V_{OUT} + 1V		35	70	μA
Supply Current (Standby)	I_{ST-BY}	V_{IN}=V_{CE}=Set V_{OUT} + 1V		0.1	1.0	μA
Line Regulation	$\Delta V_{OUT}/\Delta V_{IN}$	Set V_{OUT} + 0.5V≤V_{IN}≤8V, I_{OUT}=30mA		0.05	0.20	%/V
Ripple Rejection	RR	f=1kHz, Ripple 0.5Vp-p, V_{IN}=Set V_{OUT}+ 1V		70		dB
Input Voltage	V_{IN}		2		8	V
Output Voltage Temperature Coefficient	$\Delta V_{OUT}/\Delta T$	I_{OUT} = 30mA, -20°C≤T_{OPR}≤85°C		±100		ppm/°C
Short Current Limit	I_{LIMIT}	V_{OUT}=0V		200		mA
$\overline{CE}$ Pull-up Resistance	R_{PU}		2.5	5.0	10.0	MΩ
$\overline{CE}$ Input Voltage "H"	V_{CEH}		1.5		V_{IN}	V
$\overline{CE}$ Input Voltage "L"	V_{CEL}		0.00		0.25	V
Output Noise	eN	B_W = 10Hz ~ 100kHz		30		μVrms

LR1102B-XX (T_{OPR}=25°C)

PARAMETER	SYMBOL	TEST CONDITIONS	MIN	TYP	MAX	UNIT
Output Voltage	V_{OUT}	V_{IN}=Set V_{OUT} + 1V, 1mA≤I_{OUT}≤30mA	V_{OUT}x0.98		V_{OUT}x1.02	V
Output Voltage	V_{OUT}	V_{IN}=Set V_{OUT} + 1V, 0mA≤I_{OUT}≤150mA	V_{OUT}x0.97		V_{OUT}x1.03	V
Output Voltage	V_{OUT}	V_{IN}=9V, 0mA≤I_{OUT}≤150mA	V_{OUT}x0.97		V_{OUT}x1.03	V
Output Current	I_{OUT}	Refer to the Electrical Characteristics by Output Voltage				
Load Regulation	$\Delta V_{OUT}/\Delta I_{OUT}$	V_{IN}=Set V_{OUT} + 1V, 1mA≤I_{OUT}≤80mA		12	40	mV
Dropout Voltage	V_{DIF}	Refer to the Electrical Characteristics by Output Voltage				
Supply Current	I_{SS}	V_{IN}=Set V_{OUT} + 1V		35	70	μA
Supply Current (Standby)	I_{ST-BY}	V_{IN}= Set V_{OUT} + 1V, V_{CE}=GND		0.1	1.0	μA
Line Regulation	$\Delta V_{OUT}/\Delta V_{IN}$	Set V_{OUT} + 0.5V≤V_{IN}≤8V, I_{OUT}=30mA		0.05	0.20	%/V
Ripple Rejection	RR	f=1kHz, Ripple 0.5Vp-p V_{IN}=Set V_{OUT} + 1V		70		dB

■ ELECTRICAL CHARACTERISTICS(Cont.)

PARAMETER	SYMBOL	TEST CONDITIONS	MIN	TYP	MAX	UNIT
Input Voltage	V_{IN}		2		8	V
Output Voltage Temperature Coefficient	$\Delta V_{OUT}/\Delta T$	I_{OUT} = 30mA, -20°C≤T_{OPR}≤85°C		±100		ppm/°C
Short Current Limit	I_{LIMIT}	V_{OUT}=0V		200		mA
CE Pull-down Resistance	R_{PD}		2.5	5.0	10.0	MΩ
CE Input Voltage "H"	V_{CEH}		1.5		V_{IN}	V
CE Input Voltage "L"	V_{CEL}		0.00		0.25	V
Output Noise	eN	B_W = 10Hz ~ 100kHz		30		μVrms

■ ELECTRICAL CHARACTERISTICS by OUTPUT VOLTAGE

(T_{OPR}=25°C)

PARAMETER	SYMBOL	TEST CONDITIONS		MIN	TYP	MAX	UNIT
Output Current	I_{OUT}	V_{IN} -V_{OUT} = 1.0V	1.8≤V_{OUT}≤5.0	150			mA
			1.8≤V_{OUT}≤2.7		0.18	0.30	V
			2.8≤V_{OUT}≤3.3		0.18	0.25	V
			3.4≤V_{OUT}≤5.0		0.15	0.22	V

■ TEST CIRCUITS

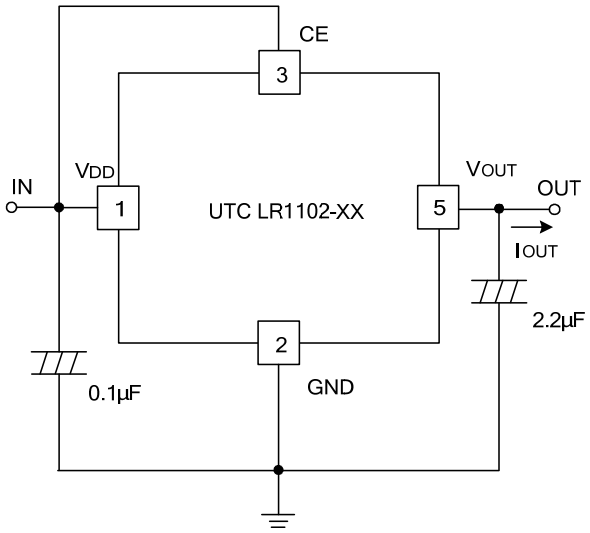

Fig.1 Standard Test Circuit

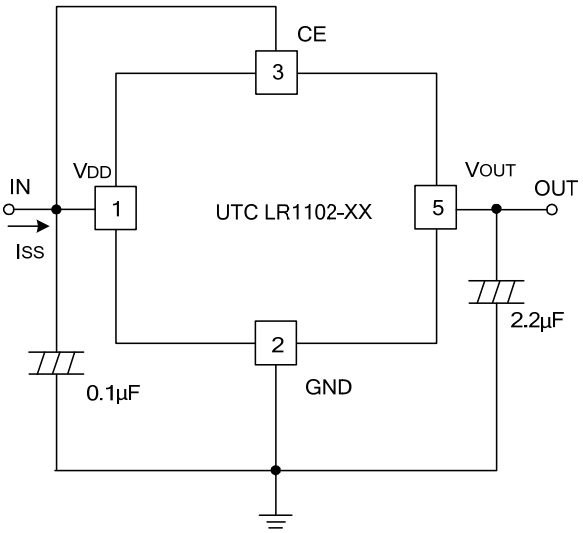

Fig.2 Supply Current Test Circuit

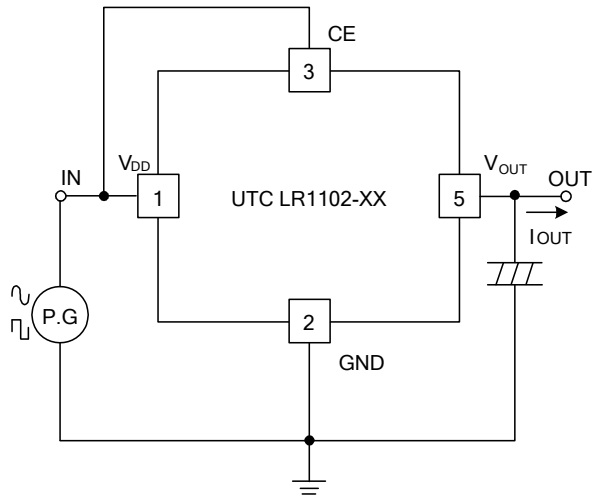

Fig.3 Ripple Rejection, Line Transient Response Test Circuit

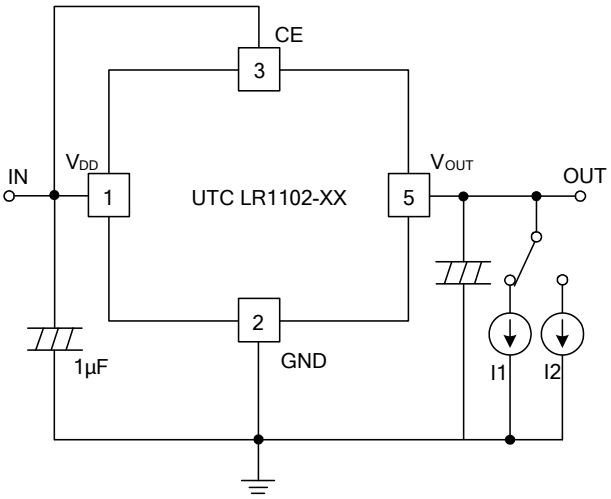

Fig.4 Load Transient Response Test Circuit

■ TYPICAL APPLICATION

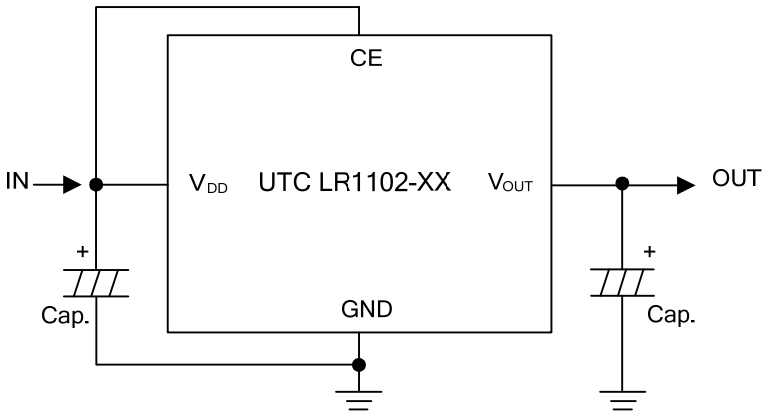

■ TYPICAL CHARACTERISTICS

1. Output Voltage vs. Output Current

LR1102-3.0V

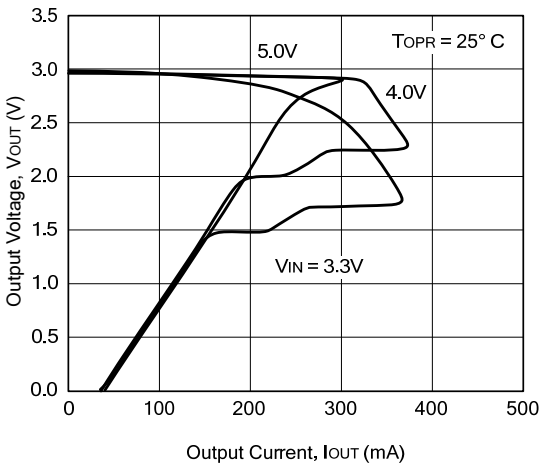

LR1102-4.0V

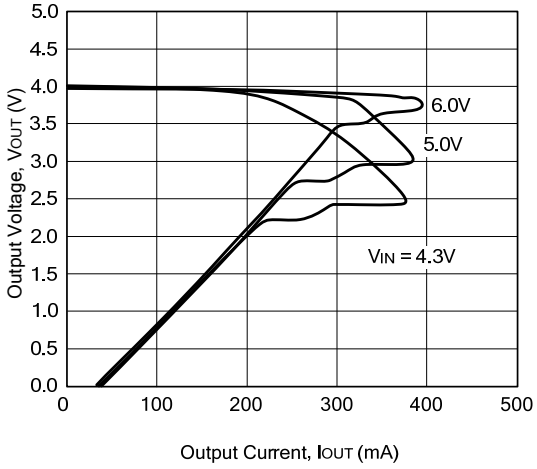

LR1102-5.0V

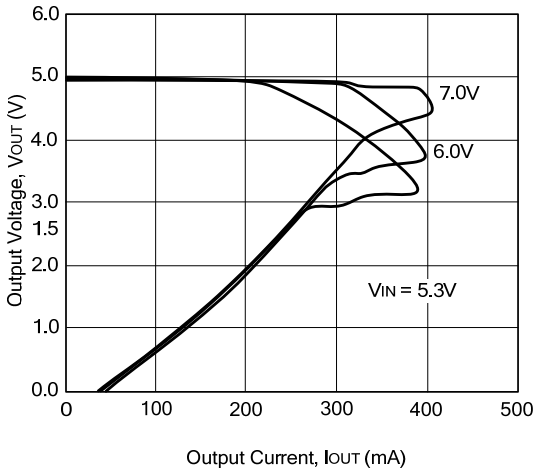

2. Dropout Voltage vs. Output Current

LR1102-3.0V

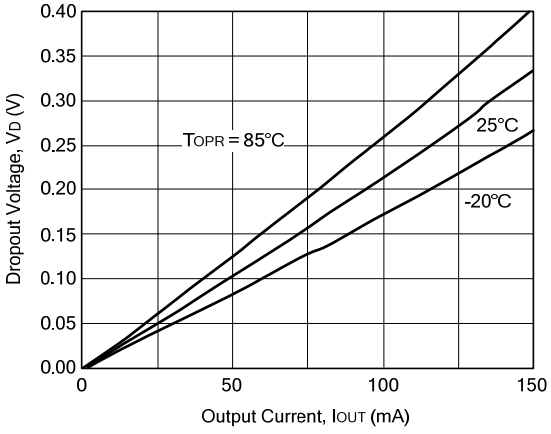

LR1102-4.0V

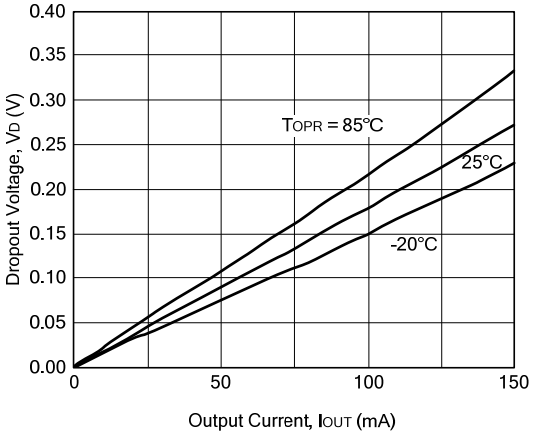

■ TYPICAL CHARACTERISTICS(Cont.)

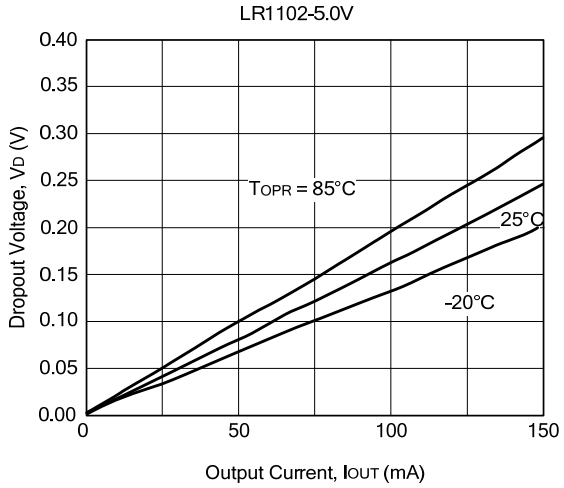

3. Output Voltage vs. Temperature

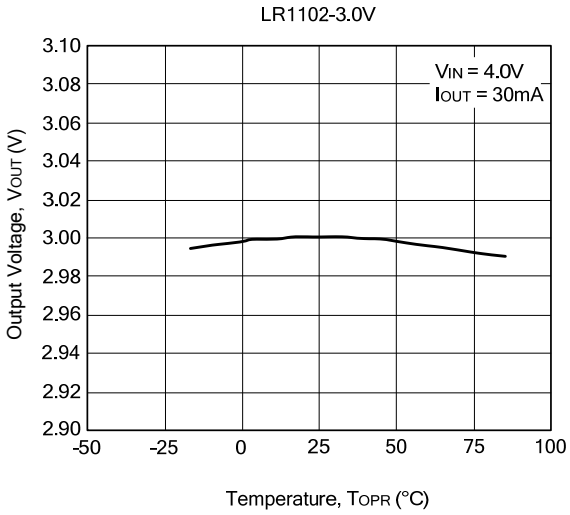

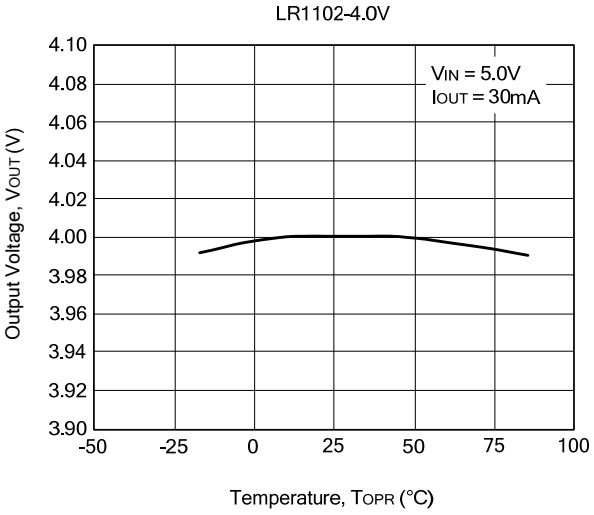

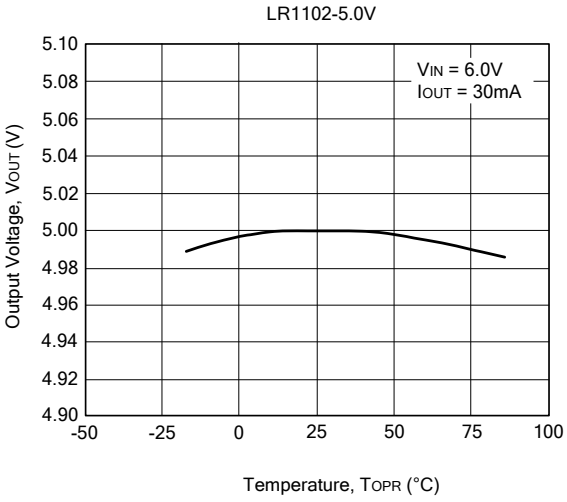

■ TYPICAL CHARACTERISTICS(Cont.)

4. Supply Current vs. Input Voltage

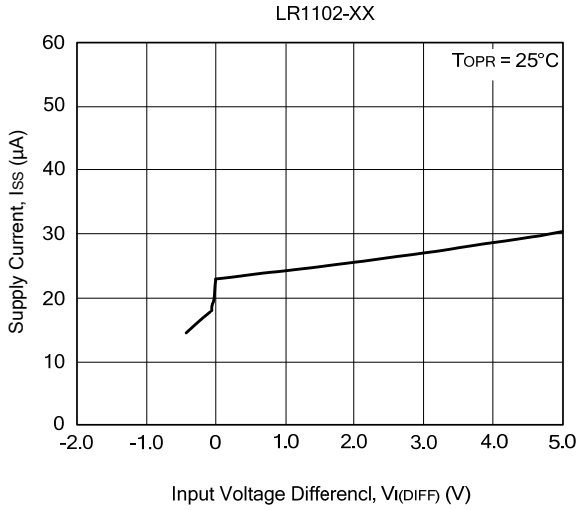

5. Supply Current vs. Temperature

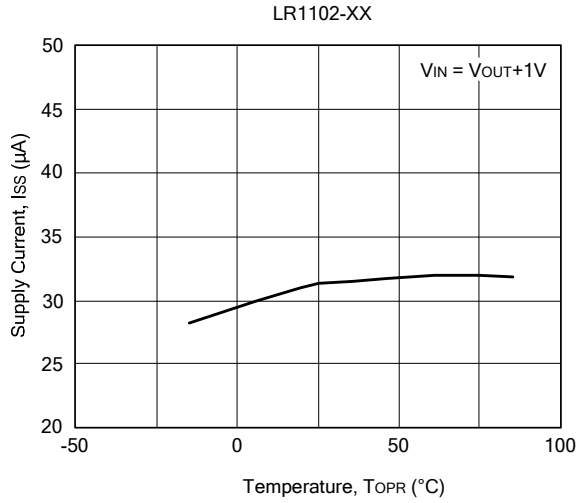

6. Dropout Voltage vs. Set Output Voltage

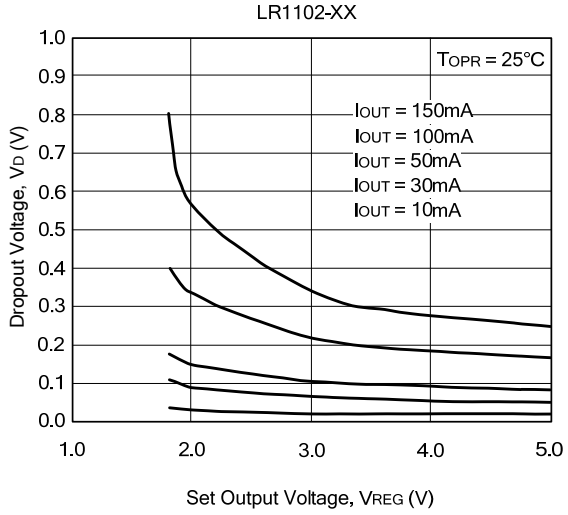

■ TYPICAL CHARACTERISTICS(Cont.)

7. Ripple Rejection vs. Frequency

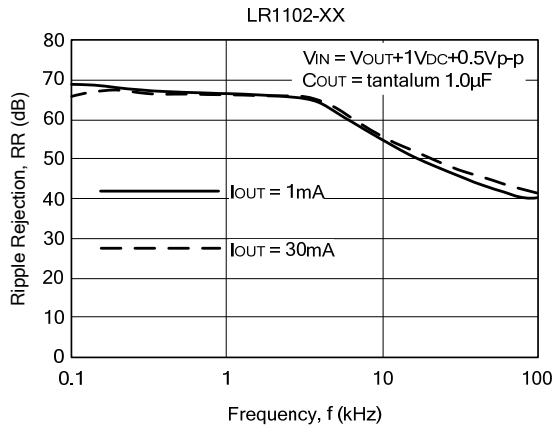

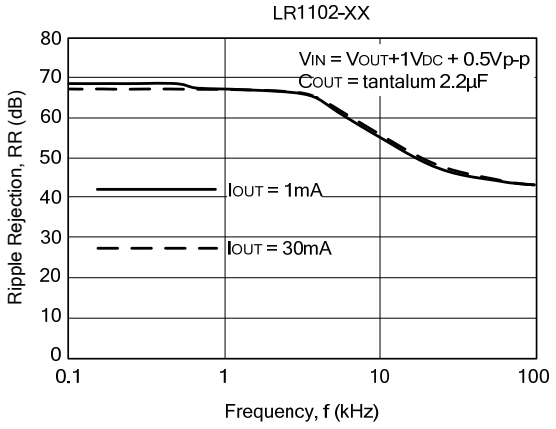

8. Ripple Rejection vs. Input Voltage (DC bias)

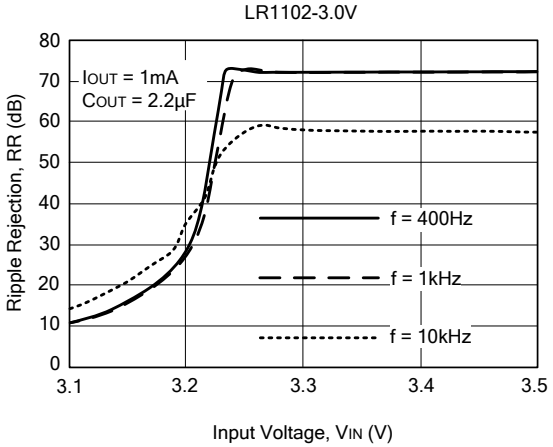

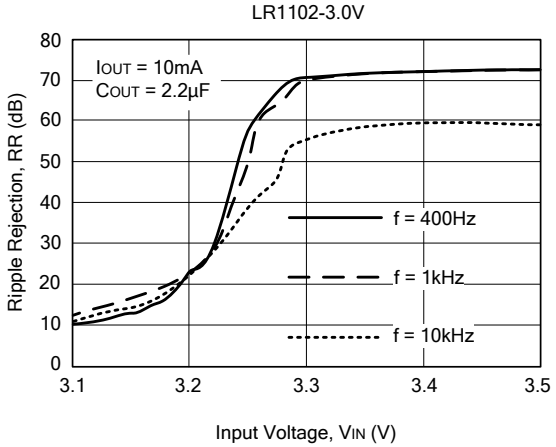

9. Load Transient Response

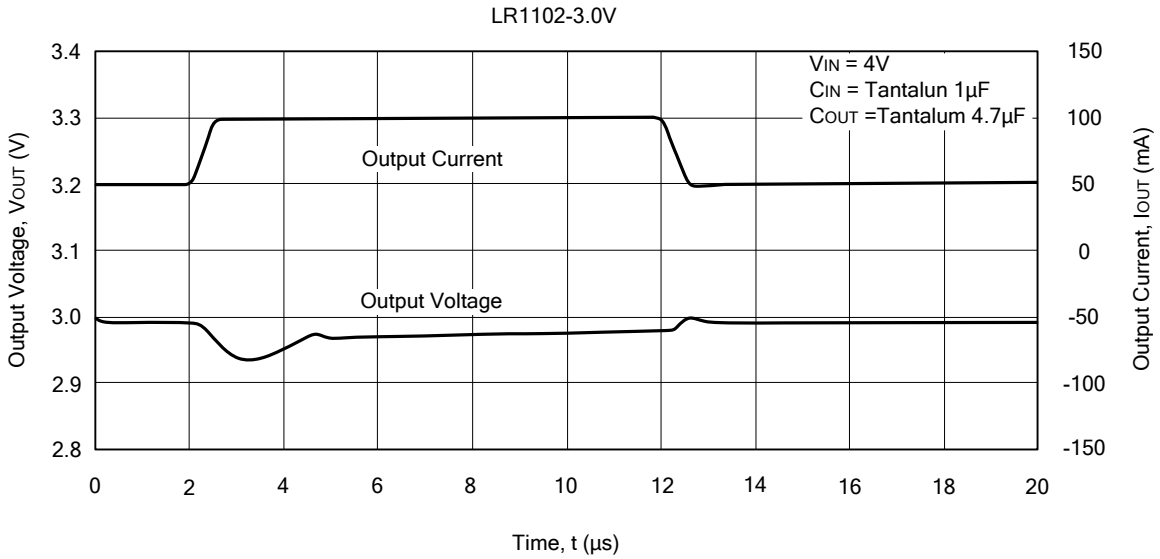

UTC assumes no responsibility for equipment failures that result from using products at values that exceed, even momentarily, rated values (such as maximum ratings, operating condition ranges, or other parameters) listed in products specifications of any and all UTC products described or contained herein. UTC products are not designed for use in life support appliances, devices or systems where malfunction of these products can be reasonably expected to result in personal injury. Reproduction in whole or in part is prohibited without the prior written consent of the copyright owner. The information presented in this document does not form part of any quotation or contract, is believed to be accurate and reliable and may be changed without notice.