Chip Inductor (Chip Coil) Power Inductor (Wire Wound Type)

LQH3NP_M0 Series (1212 Size)

■ Dimensions

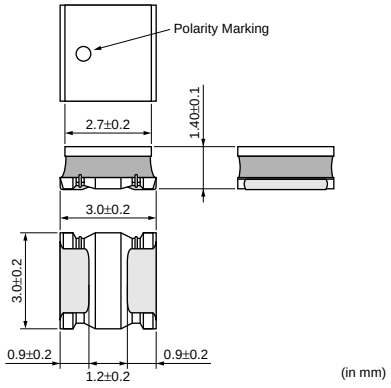

(in mm)

■ Packaging

Code	Packaging	Minimum Quantity
L	180mm Embossed Tape	1000
K	330mm Embossed Tape	4000

■ Rated Value (☐: packaging code)

Part Number	Inductance	Rated Current (Based on Inductance Change)	Rated Current (Based on Temperature Rise)	DC Resistance	Self Resonance Frequency (min.)
LQH3NPN1R0MM0☐	1.0µH±20%	1400mA	2050mA	0.044ohm ±20%	130MHz
LQH3NPN1R0NM0☐	1.0µH±30%	1400mA	2050mA	0.044ohm ±20%	130MHz
LQH3NPN2R2MM0☐	2.2µH±20%	1250mA	1600mA	0.073ohm ±20%	90MHz
LQH3NPN2R2NM0☐	2.2µH±30%	1250mA	1600mA	0.073ohm ±20%	90MHz
LQH3NPN3R3MM0☐	3.3µH±20%	1000mA	1450mA	0.092ohm ±20%	75MHz
LQH3NPN3R3NM0☐	3.3µH±30%	1000mA	1450mA	0.092ohm ±20%	75MHz
LQH3NPN4R7MM0☐	4.7µH±20%	880mA	1250mA	0.13ohm ±20%	65MHz
LQH3NPN4R7NM0☐	4.7µH±30%	880mA	1250mA	0.13ohm ±20%	65MHz
LQH3NPN6R8MM0☐	6.8µH±20%	820mA	1000mA	0.20ohm ±20%	50MHz
LQH3NPN6R8NM0☐	6.8µH±30%	820mA	1000mA	0.20ohm ±20%	50MHz
LQH3NPN100MM0☐	10µH±20%	550mA	870mA	0.26ohm ±20%	45MHz
LQH3NPN100NM0☐	10µH±30%	550mA	870mA	0.26ohm ±20%	45MHz
LQH3NPN150MM0☐	15µH±20%	520mA	730mA	0.36ohm ±20%	30MHz
LQH3NPN150NM0☐	15µH±30%	520mA	730mA	0.36ohm ±20%	30MHz
LQH3NPN220MM0☐	22µH±20%	410mA	650mA	0.51ohm ±20%	28MHz
LQH3NPN330MM0☐	33µH±20%	370mA	500mA	0.85ohm ±20%	22MHz
LQH3NPN470MM0☐	47µH±20%	310mA	410mA	1.25ohm ±20%	18MHz
LQH3NPN101MM0☐	100µH±20%	200mA	240mA	3.50ohm ±20%	12MHz

Test Frequency: 1MHz Class of Magnetic Shield: Magnetic shield of magnetic powder in resin
Operating Temperature Range (Self-temperature rise is included): -40 to +125°C
Operating Temperature Range (Self-temperature rise is not included): -40 to +85°C
Only for reflow soldering.
*1 When Rated Current is applied to the Products, Inductance will be within ±30% of nominal Inductance value.
*2 When Rated Current is applied to the Products, self-generation of heat will rise to 40°C or less.

Continued on the following page.

● This data sheet is applied for CHIP INDUCTORS (CHIP COILS) used for General Electronics equipment for your design.

⚠Note:

1. This datasheet is downloaded from the website of Murata Manufacturing co., ltd. Therefore, it's specifications are subject to change or our products in it may be discontinued without advance notice. Please check with our sales representatives or product engineers before ordering.
2. This datasheet has only typical specifications because there is no space for detailed specifications. Therefore, please approve our product specifications or transact the approval sheet for product specifications before ordering.

Continued from the preceding page.

■ Notice (Rated Current)

<Rated Current>
(Based on Inductance Change)
When Rated Current is applied to the Products, Inductance will be within +-30% of nominal Inductance value.

<Rated Current>
(Based on Temperature Rise)
When Rated Current is applied to the Products, self-generation of heat will rise to 40°C or less.

■ Inductance-Frequency Characteristics (Typ.)

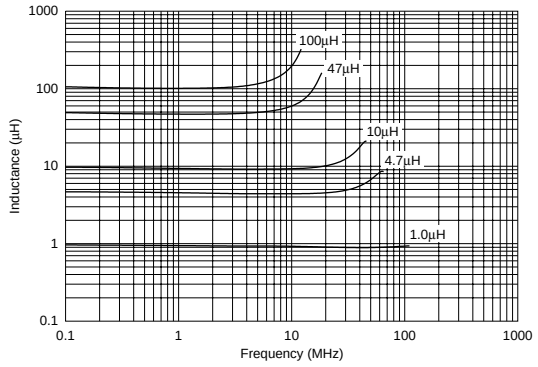

■ Inductance-Current Characteristics (Typ.)

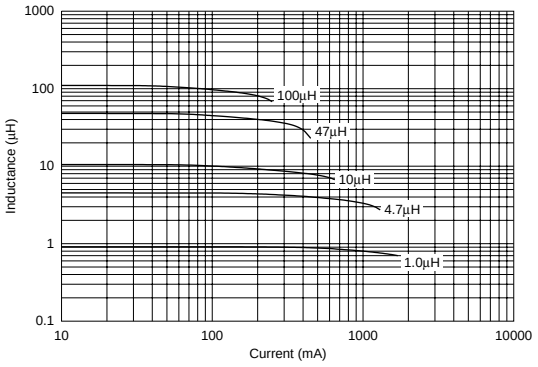

■ Temperature Rise Characteristics (Typ.)

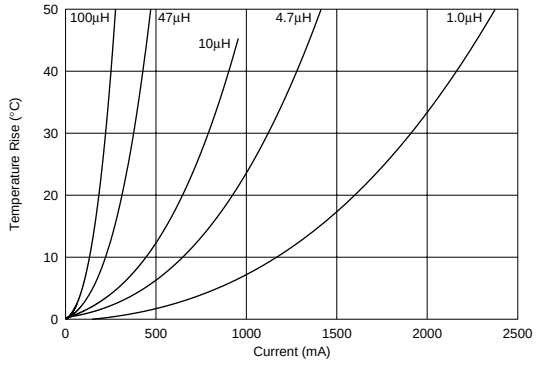

■ ⚠Caution/Notice

⚠Caution (Rating)
Do not use products beyond the rated current as this may create excessive heat.

Notice
Solderability of Tin plating termination chip might be deteriorated when low temperature soldering profile where peak solder temperature is below the Tin melting point is used. Please confirm the solderability of Tin plating termination chip before use.

● This data sheet is applied for CHIP INDUCTORS (CHIP COILS) used for General Electronics equipment for your design.

⚠Note:

1. This datasheet is downloaded from the website of Murata Manufacturing co., ltd. Therefore, it's specifications are subject to change or our products in it may be discontinued without advance notice. Please check with our sales representatives or product engineers before ordering.
2. This datasheet has only typical specifications because there is no space for detailed specifications. Therefore, please approve our product specifications or transact the approval sheet for product specifications before ordering.