

Features

- Fast switching
- Automatic reset
- SMA package
- Suitable for industrial lighting environments
- RoHS compliant*

Applications

- LED streetlights
- LCD backlighting
- Display lighting
- Intrinsically safe lighting

LSPxxxxAJR Series LED Shunt Protector

General Information

Bourns® LSP Series protectors are electronic shunts that provide a current bypass when an LED element in an LED series string fails open circuit. This ensures the remaining string of LEDs will continue to function. There are many cases where high reliability of the LED lighting must be maintained, such as LCD backlighting, transport lighting, avionics, intrinsically safe and low maintenance lighting.

The LSPxxxAJR Series is available in surface mount package DO-214AC (SMA) size format.

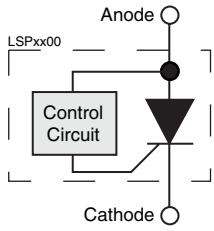

Absolute Maximum Ratings (@ T_A = 25 °C Unless Otherwise Noted)

Rating		Symbol	Value	Unit
Repetitive peak off-state voltage	LSP0600 LSP0900 LSP1300 LSP1800	V_{DRM}	6 9 13 18	V
Average on-state current (Note 1)		I_T	1	A
Operating junction temperature		T_J	-40 to +150	°C
Storage temperature		T_S	-65 to +150	°C
Lead temperature, soldering (10 s)			260	°C

Notes:
1. Using 75 mm x 75 mm 4-Layer PCB (EIA/JESD51-7).

Electrical Characteristics (@ T_A = 25 °C Unless Otherwise Noted)

Parameter	Test Conditions		Min.	Nom.	Max.	Unit
I_{DRM} Repetitive peak off-state current	$V_D = V_{DRM}$				10	μA
$V_{(BO)}$ Breakover voltage	dv/dt = 750 V/ms, R_{SOURCE} = 300	LSP0600 LSP0900 LSP1300 LSP1800	6 9 13 18		16 18 26 33	V
I_H Holding current	I_T = 1 A, di/dt = 30 mA/ms		5	30		mA
I_{BO} Breakover current	di/dt = 0.8 A/ms				75	mA
V_T On-state voltage	I_T = 1 A				1.2	V

Thermal Characteristics (@ T_A = 25 °C Unless Otherwise Noted)

Parameter	Test Conditions	Min.	Nom.	Max.	Unit
Junction to free air thermal resistance	EIA/JESD51-3 PCB, I_T= 350 mA, T_A= 25 °C		230		°C/W
Junction to free air thermal resistance	EIA/JESD51-7, 75 mm x 75 mm 4-Layer PCB, I_T = 1.0 A, T_A= 25 °C		90		°C/W

JANUARY 2012 – REVISED FEBRUARY 2012
*RoHS Directive 2002/95/EC Jan. 27, 2003 including annex and RoHS Recast 2011/65/EU June 8, 2011.
Specifications are subject to change without notice.
Customers should verify actual device performance in their specific applications.

V-I Characteristic

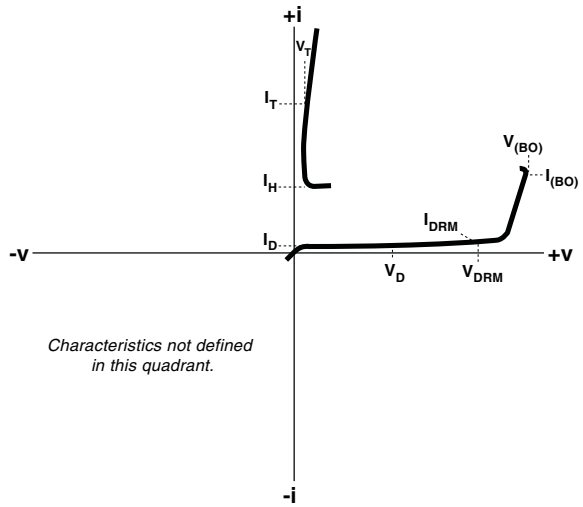

On-state Voltage vs. Junction Temperature

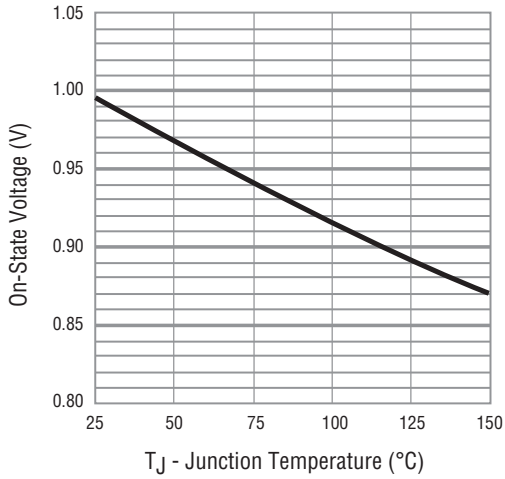

Normalized Breakover Voltage vs. Junction Temperature

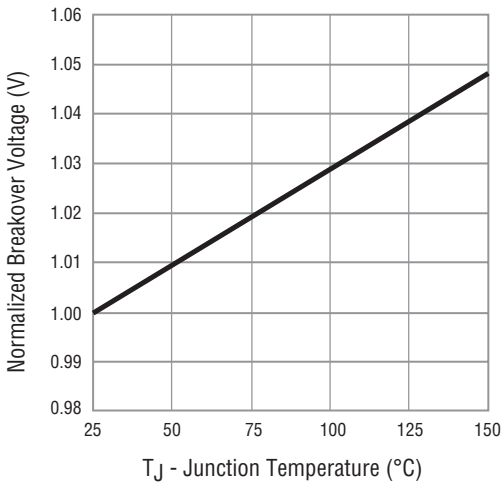

Typical Application

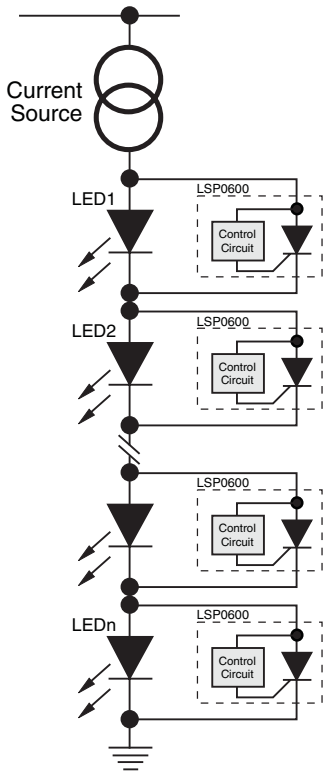

Note: The interaction between the Bourns® LSP device and the power supply for the LED series string dictates the power supply architecture. Proper care must be taken in the design of the power supply architecture to ensure that the Bourns® LSP devices operate as intended and the design maintains integrity.

Specifications are subject to change without notice.
Customers should verify actual device performance in their specific applications.

LSPxxxxAJR Series LED Shunt Protector

BOURNS®

Product Specifications

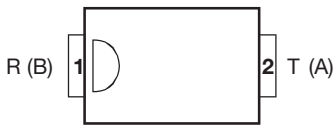

MDXXCCE

Unit ..... Epoxy molded SMA DO-214AC package
Mold Material UL94V-0
Terminations ..... 100 % matte tin-plated over copper alloy
Unit Weight ..... 102 mg.

Packaging Specifications

Standard EIA-481-1
Tape Width ..... 12 mm (.472 in.)
Reel Diameter ..... 330 mm (12.99 in.)
Part Alignment ..... Cathode bar adjacent to sprocket hole
Quantity per Reel ..... 5,000 pieces

Typical Part Marking

	Top Side Marking
LSP0600AJR-S	LSP060
LSP0900AJR-S	LSP090
LSP1300AJR-S	LSP130
LSP1800AJR-S	LSP180

How to Order

LSP 0600 AJ R - S

Model Series
- LSP = LED Shunt Protector

Off-State Voltage
- 0600 = 6 V
- 0900 = 9 V
- 1300 = 13 V
- 1800 = 18 V

Package
- AJ = SMA DO-214AC Package

Standard Packaging
- R = Tape and Reel Packaging (5,000 pcs./reel)

Termination
- S = RoHS Compliant

BOURNS®

Asia-Pacific: Tel: +886-2 2562-4117 • Fax: +886-2 2562-4116
Europe: Tel: +41-41 768 5555 • Fax: +41-41 768 5510
The Americas: Tel: +1-951 781-5500 • Fax: +1-951 781-5700
www.bourns.com

JANUARY 2012 – REVISED FEBRUARY 2012
Specifications are subject to change without notice.
Customers should verify actual device performance in their specific applications.