JDI Japan Display Inc. Group

SPECIFICATION

[Product Name : LPM044M141A]

CONTENTS

1. BASIC SPECIFICATIONS 1

1.1 STRUCTURES 1
1.2 BLOCK DIAGRAM 2
1.3 DISPLAY ADDRESS MAP AND PIXEL LAYOUT 3
1.4 I/O PINS 4

2. ABSOLUTE MAXIMUM RATINGS (VSS=0V) 5

3. OPERATING CONDITIONS 6

3.1 POWER SUPPLY VOLTAGE AND INPUT SIGNALS 6

4. ELECTRICAL CHARACTERISTICS 6

4.1 POWER CONSUMPTION 6
4.2 INPUT SIGNAL CHARACTERISTICS 7
4.3 POWER ON/OFF SEQUENCE 8

5. MODE 9

5.1 MODE TABLE 9
5.2 MODE CHART 9

6. TIMING CHART AND DETAILS OF MODE 10

6.1 SINGLE LINE UPDATE MODE (3BIT-DATA MODE) 10
6.2 MULTIPLE LINES UPDATE MODE (3BIT-DATA MODE) 11
6.3 SINGLE LINE UPDATE MODE (1BIT-DATA MODE) 12
6.4 MULTIPLE LINES UPDATE MODE (1BIT-DATA MODE) 13
6.5 SINGLE LINE UPDATE MODE (4BIT-DATA MODE) 14
6.6 MULTIPLE LINES UPDATE MODE (4BIT-DATA MODE) 15
6.7 NO-UPDATE MODE 16
6.8 ALL CLEAR MODE 17
6.9 DISPLAY BLINKING COLOR MODE 18
6.10 DISPLAY COLOR INVERSION MODE 19

7. COM INVERSION 20

7.1 COM POLARITY SERIAL INPUT / EXTMODE = “L” 20
7.2 EXTCOMIN SIGNAL / EXTMODE=“H” 20

8. GATE LINE ADDRESS TABLE 21

9. OPTICAL SPECIFICATION 22

9.1 OPTICAL CHARACTERISTICS 23
9.2 DEFINITION AND CONDITION OF OPTICAL CHARACTERISTICS 24

10. INSPECTION 26

11. RELIABILITY 27

11.1 CONDITIONS OF RELIABILITY AND MECHANICAL TEST 27
11.2 CRITERIA FOR JUDGEMENT 27

12. DESIGNATION OF LOT MARK 28

13. PACKING SPECIFICATIONS 29

13.1 INNER CARTON 29
13.2 MASTER CARTON 30

14. LCD MODULE USAGE AND PRECAUTIONS 31

14.1 HANDLING 31
14.2 DESIGN OF APPLICATION 32

CONTENTS

14.3 DISPLAY CHARACTERISTICS 32
14.4 KEEPING THE PRODUCTS 32
14.5 DISPOSAL 33
14.6 OTHERS 33
15. OUTLINE DRAWING 34

1. BASIC SPECIFICATIONS

This product is the System on the Glass display with SPI(Serial Peripheral Interface) featuring MIP(Memory In Pixel) function which is low power technology.

This display is the reflective LCD, therefore the specification is defined in reflective mode only unless otherwise specified in this specification sheet.

1.1 STRUCTURES

No.	FACTOR	SPECIFICATIONS	UNIT
1	LCD structure	LTPS (Memory in Pixel type)	-
2	Outward *1 (W x H x D)	92.664 x 72.748 x 1.39 *1)	mm
3	Weight	20.3 (Typ.)	g
4	Screen size	89.664(H) x67.248(V) (4.41 inch)	mm
5	Number of pixels	307,200 (640 x RGB x480)	pixel
6	Interface	SPI (Serial Peripheral Interface)	-
7	Dot pitch (Horizontal x Vertical)	0.0467(Ave.) x 0.1401	mm
8	Dot layout	RGB stripe	-
9	Number of colors	8 colors	-
10	Liquid crystal mode	ECB normally black (Reflective type)	-
11	Polarizer	Hard Coat type (*Pencil Hardness : 2H)	-

*1) Excluding FPC and part of protruding. See attached drawing for details.

1.2 BLOCK DIAGRAM

The block diagram of a panel is shown below.

1.2.1 Pin layout Internal circuit

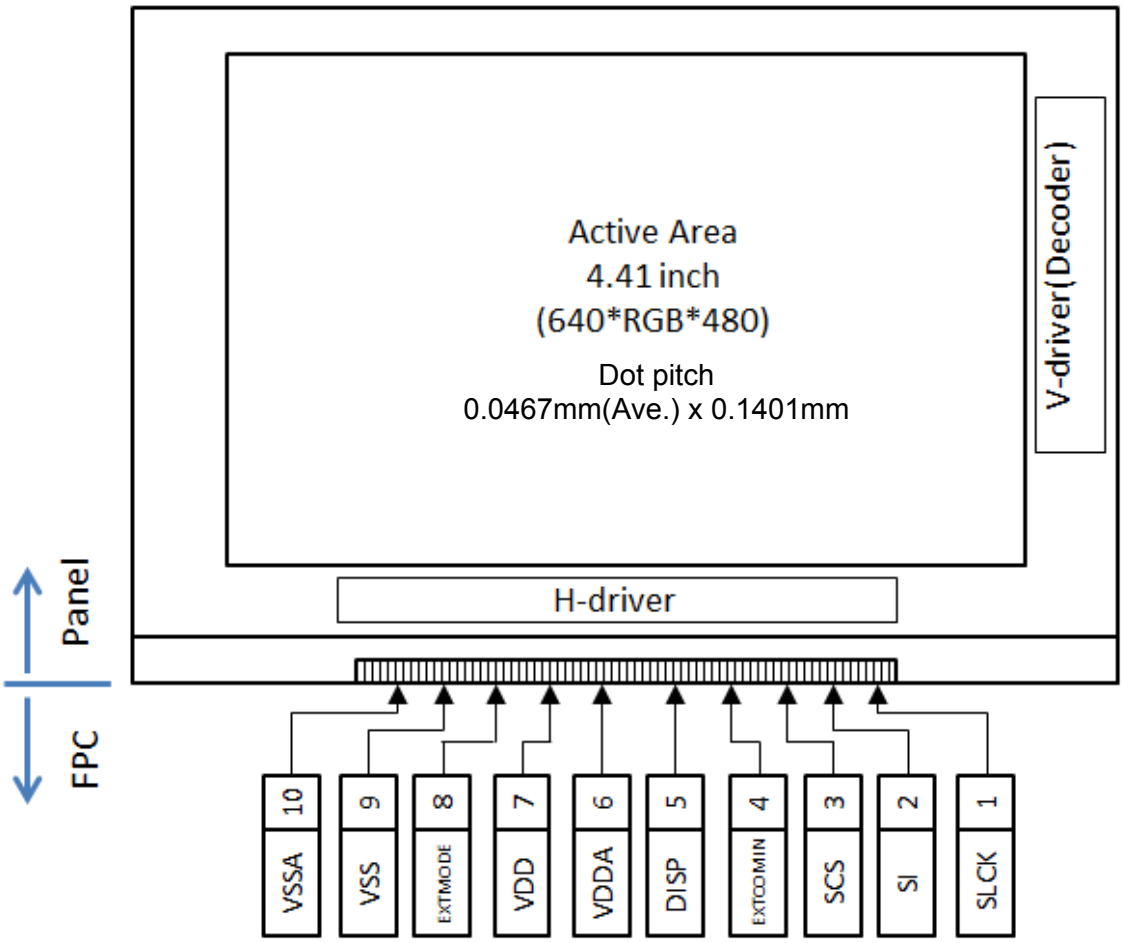

Viewing in front of a LCD panel

1.3 DISPLAY ADDRESS MAP AND PIXEL LAYOUT

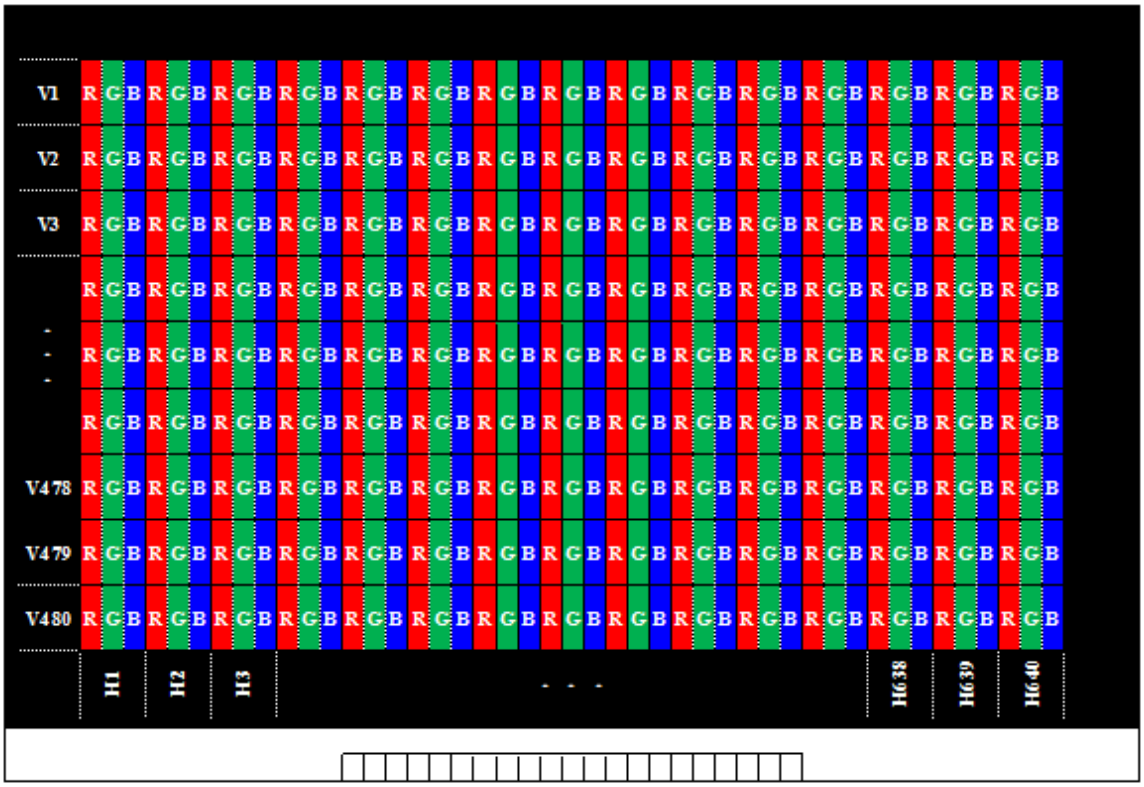

Pixels indicated “RGB” are displayed

Number of active pixels: 640 x RGB x 480 dot

(Viewing in front of a LCD panel)

H1…640 x RGB : Horizontal line

V1…480 : Vertical line

1.4 I/O PINS

PIN	SYMBOL	FUNCTION	I/O	REMARKS
1	SCLK	Serial Clock Signal	I	
2	SI	Serial Data Input Signal	I	
3	SCS	Chip Select Signal	I	
4	EXTCOMIN	COM Inversion Signal Input	I	
5	DISP	Display ON/OFF Switching Signal	I	(*1-1)
6	VDDA	Power Supply for Analog	P	
7	VDD	Power Supply for Logic	P	
8	EXTMODE	COM Inversion Mode Select Terminal	I	(*1-2)
9	VSS	Logic Ground	P	
10	VSSA	Analog Ground	P	

P: Power supply, I: Input, O: Output

Note)

(*1-1) ON/OFF signal is only for display. Data memory is kept also at the time of on/off.

"H" : Data memory will be displayed.

"L" : Solid black color will be displayed and data memory will be saved.

(*1-2)

"H" : Enable EXTCOMIN signal, connect to VDD.

"L" : Enable serial input flag, connect to VSS.

Recommended circuit

EXTMODE=L : COM Signal Serial Input

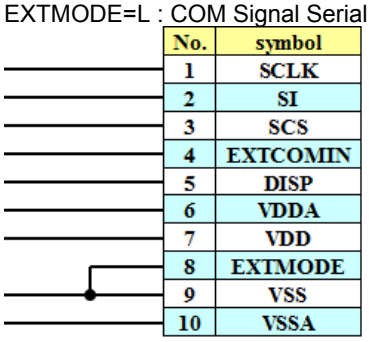

EXTMODE=H : COM Signal External Input

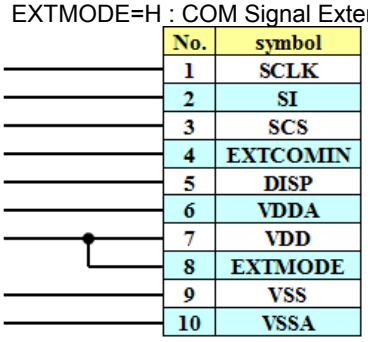

External circuit example

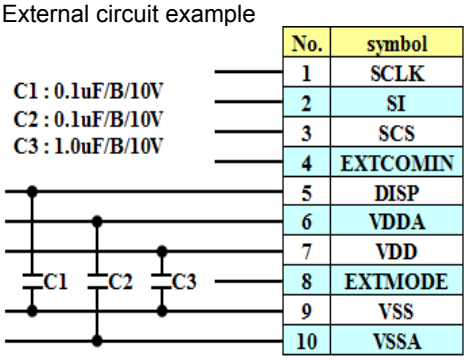

2. ABSOLUTE MAXIMUM RATINGS (VSS=0V)

PARAMETER	SYMBOL	RATINGS	UNIT	REMARKS
Power supply voltage Analog	VDDA	3.6	V	
Power supply voltage Logic	VDD	3.6	V	
Input signal voltage Hi	VIH	3.6	V	

PARAMETER	SYMBOL	RATINGS	UNIT	REMARKS
Operating temperature range (LCD panel surface)	Topr	-20 ~ +70	°C	(*2-1)
Storage temperature range	Tstg	-30 ~ +80	°C	(*2-1)

Note)

(*2-1): Maximum humidity is defined as follows:

Ta≦40°C : 85%RH Max.

Ta> 40°C : Absolute humidity needs to be equal or less than the numeric value at the condition of Ta=40°C, 85%RH.

Don't condense dew.

3. OPERATING CONDITIONS

3.1 POWER SUPPLY VOLTAGE AND INPUT SIGNALS

PARAMETER	SYMBOL	Min.	Typ.	Max.	UNIT	REMARKS
Power supply voltage Analog	VDDA	2.7	3.0	VDD	V	
	VSSA	-	0	-	V	
Power supply voltage Logic	VDD	2.7	3.0	3.4	V	(*3-1)
	VSS	-	0	-	V	(*3-2)
Input signal voltage High	VIH	VDD-0.1	VDD	VDD	V	(*3-3)
Input signal voltage Low	VIL	VSS	VSS	VSS+0.1	V	(*3-3)

Note)

(*3-1) Apply to EXTMODE="H"

(*3-2) Apply to EXTMODE="L"

(*3-3) Apply to SCLK, SI, SCS, DISP, EXTCOMIN

4. ELECTRICAL CHARACTERISTICS

4.1 POWER CONSUMPTION

Ta=25ºC

Driving Condition : VDD=3.0V,VDDA=3.0V,VIH=3.0V,VIL=0V, Data update frequency=1Hz, COM frequency=0.5Hz

Mode	Display	Min.	Typ.	Max.	UNIT	REMARKS
No update mode	Solid white	-	14	105	uW	
Data update mode	Solid white	-	123	228	uW	3bit all lines data

4.2 INPUT SIGNAL CHARACTERISTICS

Ta=25ºC, Driving Condition : VDD=3.0V,VDDA=3.0V,VIH=3.0V,VIL=0V

PARAMETER	SYMBOL	Min.	Typ.	Max.	UNIT	REMARKS
Clock frequency	fSCLK	-	1.00	2.00	MHz	(*4-1)
COM frequency	fCOM	0.5	-	70	Hz	(*4-2)
SCS rising time	trSCS	-	-	50	ns	
SCS falling time	tfSCS	-	-	50	ns	
SCS Low width	twSCSL	6.0	-	-	us	
SCS settling time	tsSCS	6.0	-	-	us	
SCS holding time	thSCS	2.0	-	-	us	(*4-3)
SI rising time	trSI	-	-	50	ns	
SI falling time	tfSI	-	-	50	ns	
SI settling time	tsSI	200	450	-	ns	
SI holding time	thSI	250	500	-	ns	
SCLK rising time	trSCLK	-	-	50	ns	
SCLK falling time	tfSCLK	-	-	50	ns	
SCLK High width	twSCLKH	250	500	-	ns	(*4-4)
SCLK Low width	twSCLKL	250	500	-	ns	(*4-4)
EXTCOMIN frequency	fXTCOMIN	1	-	140	Hz	
EXTCOMIN rising time	trEXTCOMIN	-	-	50	ns	
EXTCOMIN falling time	tfEXTCOMIN	-	-	50	ns	
EXTCOMIN High width	twEXTCOMIN	2.0	-	-	us	
DISP rising time	trDISP	-	-	50	ns	
DISP falling time	tfDISP	-	-	50	ns	

Note)

(*4-1) Please note that Max. fSCLK may be lowered when VDD and VDDA fall than 3.0V at a low temperature.

(*4-2) COM frequency should be around 60 Hz for transmissive mode.

(*4-3) In the case of data update mode in transmissive mode, thSCS should be 50us or less.

(*4-4) twSCLKH and twSCLKL should be approximately the same length, if possible.

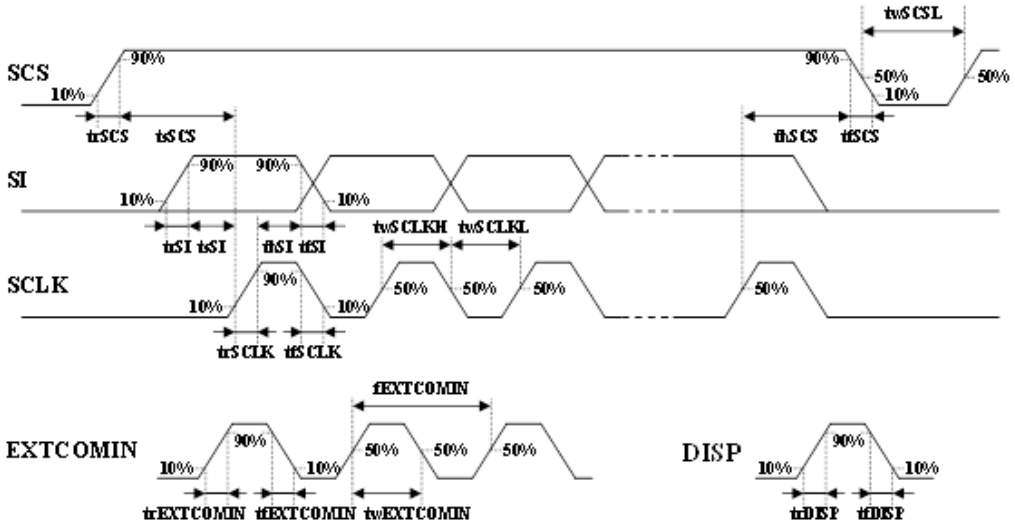

4.3 POWER ON/OFF SEQUENCE

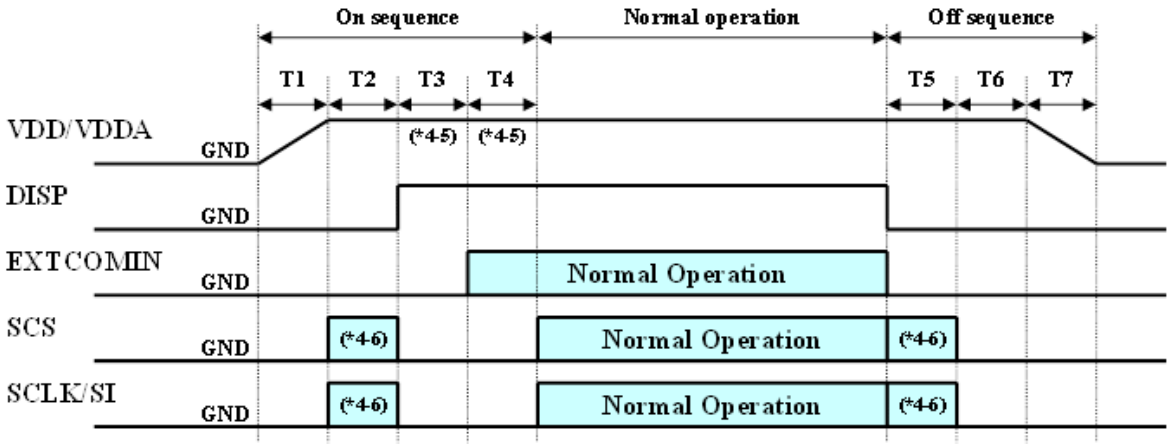

[On sequence]
T1 : Power supply rising time. (Depends on external power supply)
T2 : Pixel memory initialization 1ms or more initialize with M2 (all clear flag)
T3 : Release time for internal latch circuits. 30us or more
T4 : COM polarity initialization time. 30us or more

[Normal operation]
Duration of normal operation

[Off sequence]
T5 : Pixel memory initialization. Same as T2.
T6 : COM and latch circuits initialization. 30us or more
T7 : Power supply falling time. (Depends on external power supply)

Note)
Refer to the timing chart and electrical characteristics for details.

(*4-5) It is allowed to replace T3 and T4 mutually.
In the case of starting EXTCOMIN before rising DISP, EXTCOMIN is ignored during DISP="L".
Also, it is allowed to start simultaneously DISP and EXTCOMIN.
In that case, it is necessary to insert 100us or more (200us or less) before normal operation.
(*4-6) Pixel memory initialization.
Use M2 (all clear flag : refer to 6.8),
or write black data to all pixel memories (refer to the data update mode).

[Remark]
VDD and VDDA should rise simultaneously or VDD should rise first.
VDD and VDDA should fall simultaneously or VDDA should fall first.

5. MODE

5.1 MODE TABLE

Mode select

Unassigned bit and AG9-8 : No care, it can be H or L (L is Recommended)

M0	M1	M2	M3	M4	M5	AG9	AG8	AG7	AG6	AG5	AG4	AG3	AG2	AG1	AG0	Mode
L	L/H	L	L	-	-	-	-	-	-	-	-	-	-	-	-	No-Update
L	L/H	L	H	L/H	L/H	-	-	-	-	-	-	-	-	-	-	Blinking
L	L/H	H	L/H	L/H	L/H	-	-	-	-	-	-	-	-	-	-	All Clear
H	L/H	L	L/H	L/H	-	AG9	AG8	AG7	AG6	AG5	AG4	AG3	AG2	AG1	AG0	Data-Update
H	L/H	H	L/H	L/H	L/H	-	-	-	-	-	-	-	-	-	-	No-Update
Mode (6bit)						Gate Address (10bit)										

Function table

M0=L or M0=H/M2=H

Mode	M3	M4	M5
Blinking OFF	L	-	-
Blink Black	H	L	L
Blink White	H	H	L
Blink Inversion	H	-	H

M0=H/M2=L

Mode	M3	M4	M5
3bit data input	L	L	-
1bit data input	L	H	-
4bit data input	H	-	-

Unassigned bit : No care, it can be H or L (L is Recommended)

5.2 MODE CHART

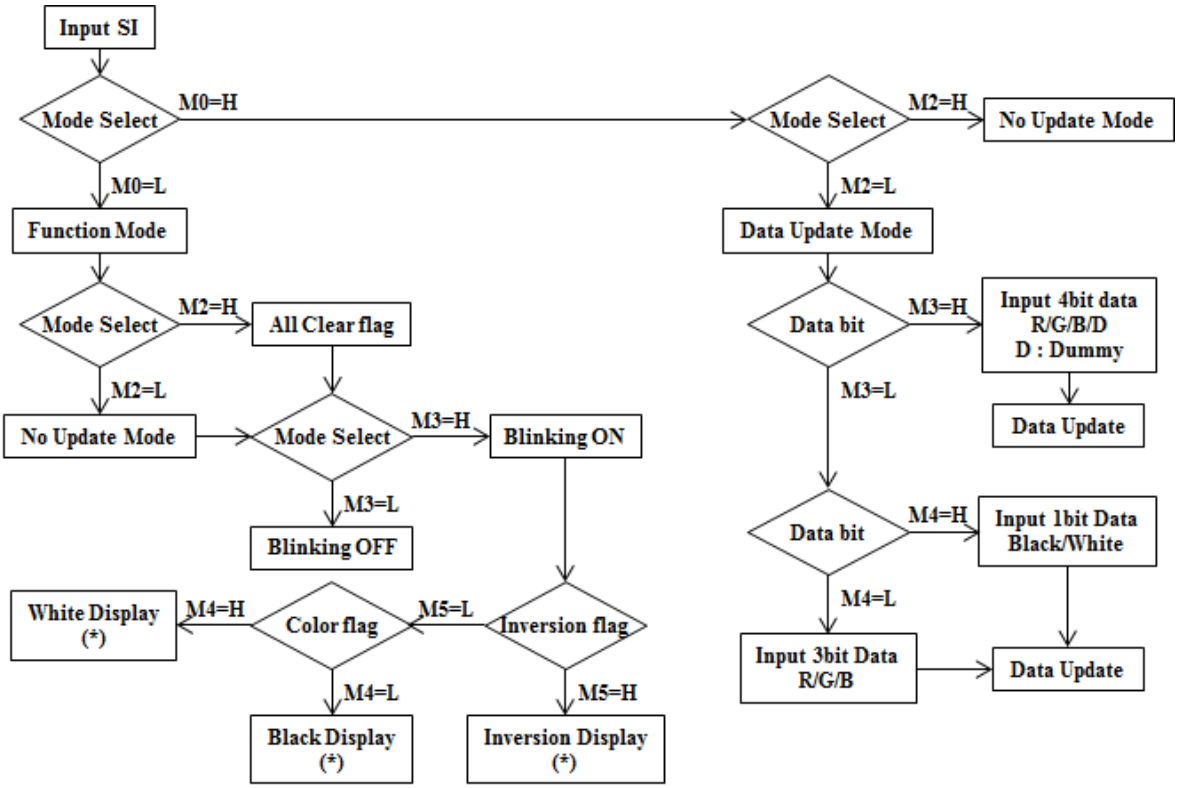

(*) Pixel memories are kept.

6. TIMING CHART AND DETAILS OF MODE

6.1 SINGLE LINE UPDATE MODE (3BIT-DATA MODE)

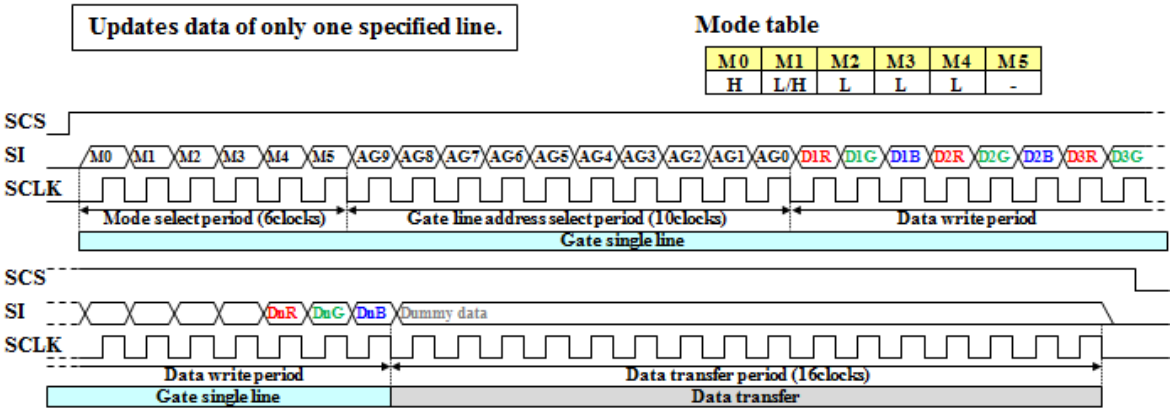

M0 : Mode flag. Set “H”, data update mode.

M1 : COM inversion flag. In the case of EXTMODE=“L”, it is valid.

In the case of “H”, outputs COM=“H”.

In the case of “L”, outputs COM=“L”.

In the case of EXTMODE=“H”, it is invalid, it can be “H” or “L”.

M2 : All clear flag. Set “L”, data update mode.

M3-M4 : Data-bit control flag. In the case of M3=“L” and M4=“L”, 3bit-data mode.

M5 : Invalid data, it can be “H” or “L”.

AG9-AG0 : Gate line address (10bit), refer to the Gate line address table.

Data : Pixel memory data. In the case of “L”, pixel is black.

In the case of 3bit-data mode,

input serially the pixel data in the order of Red-Green-Blue (3bit).

n : Number of horizontal line, refer to the Display address map and Pixel layout.

Dummy data : It can be “H” or “L”.

Insert transfer period which is 16clocks after the last data.

M0, M2 flags are cleared by SCS=“L”, and M3-M4 flags are cleared by DISP=“L”.

6.2 MULTIPLE LINES UPDATE MODE (3BIT-DATA MODE)

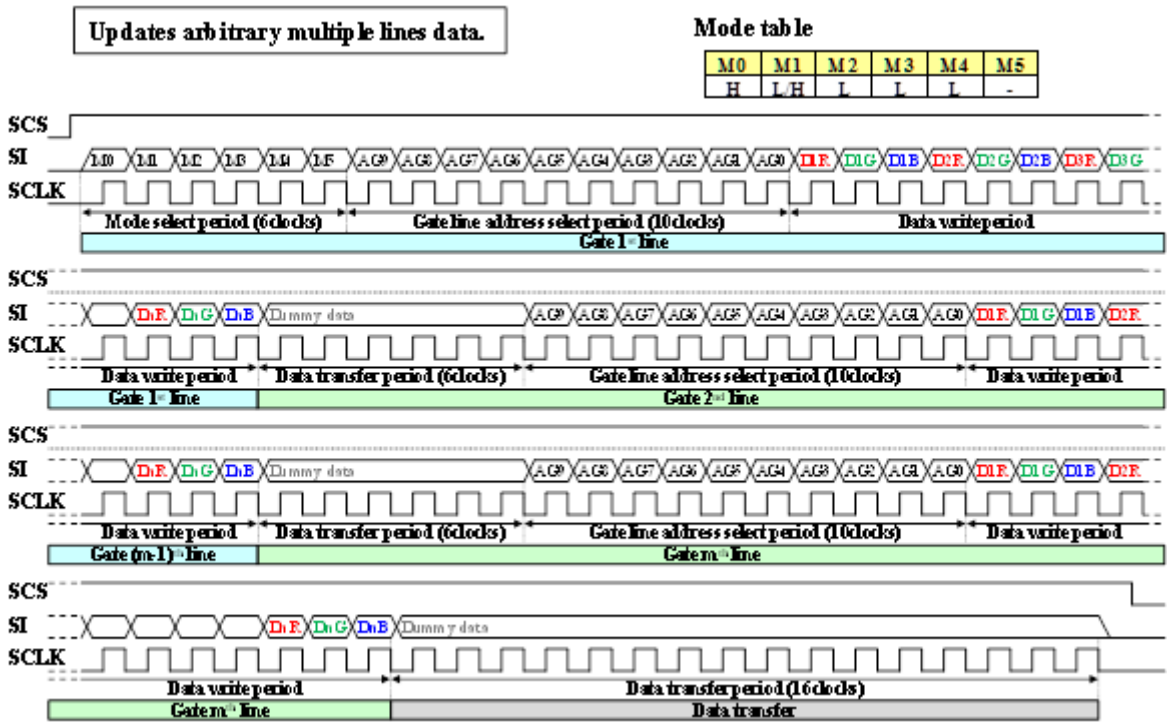

M0 : Mode flag. Set “H”, data update mode.

M1 : COM inversion flag. In the case of EXTMODE=“L”, it is valid.

In the case of “H”, outputs COM=“H”.

In the case of “L”, outputs COM=“L”.

In the case of EXTMODE=“H”, it is invalid, it can be “H” or “L”.

M2 : All clear flag. Set “L”, data update mode.

M3-M4 : Data-bit control flag. In the case of M3=“L” and M4=“L”, 3bit-data mode.

M5 : Invalid data, it can be “H” or “L”.

AG9-AG0 : Gate line address (10bit), refer to the Gate line address table.

Data : Pixel memory data. In the case of “L”, pixel is black.

In the case of 3bit-data mode,

input serially the pixel data in the order of Red-Green-Blue (3bit).

n : Number of horizontal line, refer to the Display address map and Pixel layout.

Dummy data : It can be “H” or “L”.

Input data continuously.

m : Number of vertical line, refer to the Display address map and Pixel layout.

Insert transfer period which is 6clocks between the gate line and the next gate line.

Insert transfer period which is 16clocks after the last data.

M0, M2 flags are cleared by SCS=“L”, and M3-M4 flags are cleared by DISP=“L”.

6.3 SINGLE LINE UPDATE MODE (1BIT-DATA MODE)

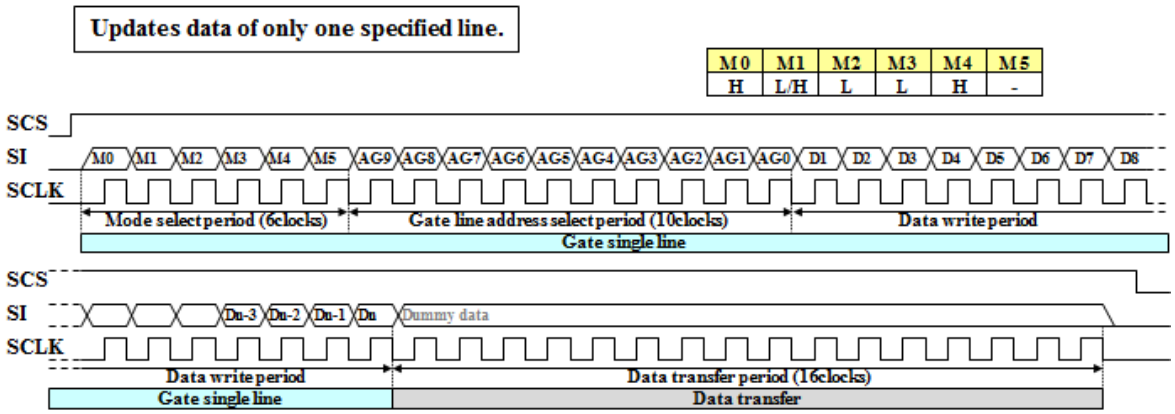

M0 : Mode flag. Set “H”, data update mode.

M1 : COM inversion flag. In the case of EXTMODE=“L”, it is valid.

In the case of “H”, outputs COM=“H”.

In the case of “L”, outputs COM=“L”.

In the case of EXTMODE=“H”, it is invalid, it can be “H” or “L”.

M2 : All clear flag. Set “L”, data update mode.

M3-M4 : Data-bit control flag. In the case of M3=“L” and M4=“H”, 1bit-data mode.

M5 : Invalid data, it can be “H” or “L”.

AG9-AG0 : Gate line address (10bit), refer to the Gate line address table.

Data : Pixel memory data. In the case of “L”, pixel is black.

In the case of 1bit-data mode, input the pixel data “H” or “L” (1bit).

Pixel memories of red, green and blue are written the same data.

n : Number of horizontal line, refer to the Display address map and Pixel layout.

Dummy data : It can be “H” or “L”.

Insert transfer period which is 16clocks after the last data.

M0, M2 flags are cleared by SCS=“L”, and M3-M4 flags are cleared by DISP=“L”.

6.4 MULTIPLE LINES UPDATE MODE (1BIT-DATA MODE)

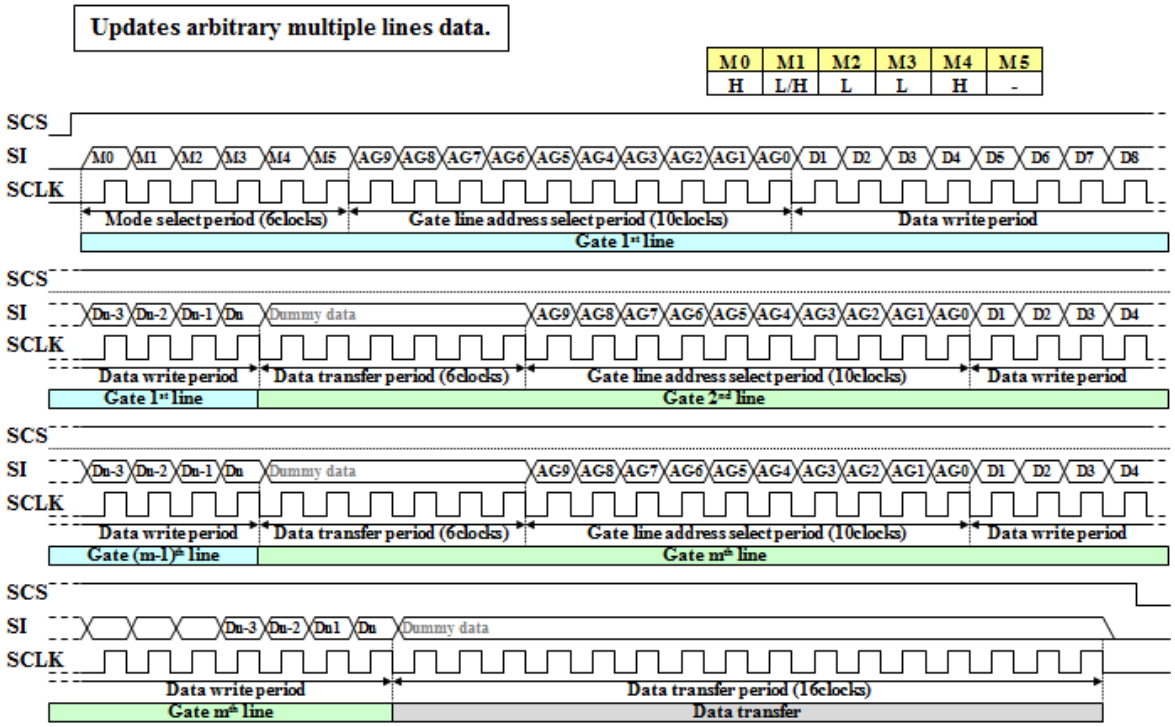

M0 : Mode flag. Set “H”, data update mode.

M1 : COM inversion flag. In the case of EXTMODE=“L”, it is valid.

In the case of “H”, outputs COM=“H”.

In the case of “L”, outputs COM=“L”.

In the case of EXTMODE=“H”, it is invalid, it can be “H” or “L”.

M2 : All clear flag. Set “L”, data update mode.

M3-M4 : Data-bit control flag. In the case of M3=“L” and M4=“H”, 1bit-data mode.

M5 : Invalid data, it can be “H” or “L”.

AG9-AG0 : Gate line address (10bit), refer to the Gate line address table.

Data : Pixel memory data. In the case of “L”, pixel is black.

In the case of 1bit-data mode, input the pixel data “H” or “L” (1bit).

Pixel memories of red, green and blue are written the same data.

n : Number of horizontal line, refer to the Display address map and Pixel layout.

Dummy data : It can be “H” or “L”.

Input data continuously.

m : Number of vertical line, refer to the Display address map and Pixel layout.

Insert transfer period which is 6clocks between the gate line and the next gate line.

Insert transfer period which is 16clocks after the last data.

M0, M2 flags are cleared by SCS=“L”, and M3-M4 flags are cleared by DISP=“L”.

6.5 SINGLE LINE UPDATE MODE (4BIT-DATA MODE)

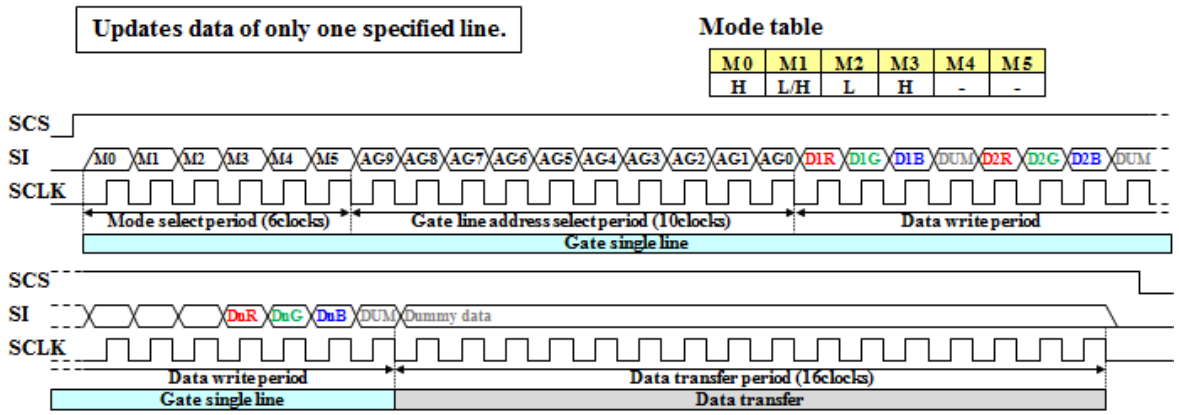

M0 : Mode flag. Set “H”, data update mode.

M1 : COM inversion flag. In the case of EXTMODE=“L”, it is valid.

In the case of “H”, outputs COM=“H”.

In the case of “L”, outputs COM=“L”.

In the case of EXTMODE=“H”, it is invalid, it can be “H” or “L”.

M2 : All clear flag. Set “L”, data update mode.

M3 : Data-bit control flag. In the case of M3=“H”, 4bit-data mode.

M4-M5 : Invalid data, it can be “H” or “L”.

AG9-AG0 : Gate line address (10bit), refer to the Gate line address table.

Data : Pixel memory data. In the case of “L”, pixel is black.

In the case of 4bit-data mode,

input serially the pixel data in the order of Red-Green-Blue-Dummy (4bit).

Dummy data (DUM) can be “H” or “L”.

n : Number of horizontal line, refer to the Display address map and Pixel layout.

Dummy data : It can be “H” or “L”.

Insert transfer period which is 16clocks after the last data.

M0, M2 flags are cleared by SCS=“L”, and M3 flag is cleared by DISP=“L”.

6.6 MULTIPLE LINES UPDATE MODE (4BIT-DATA MODE)

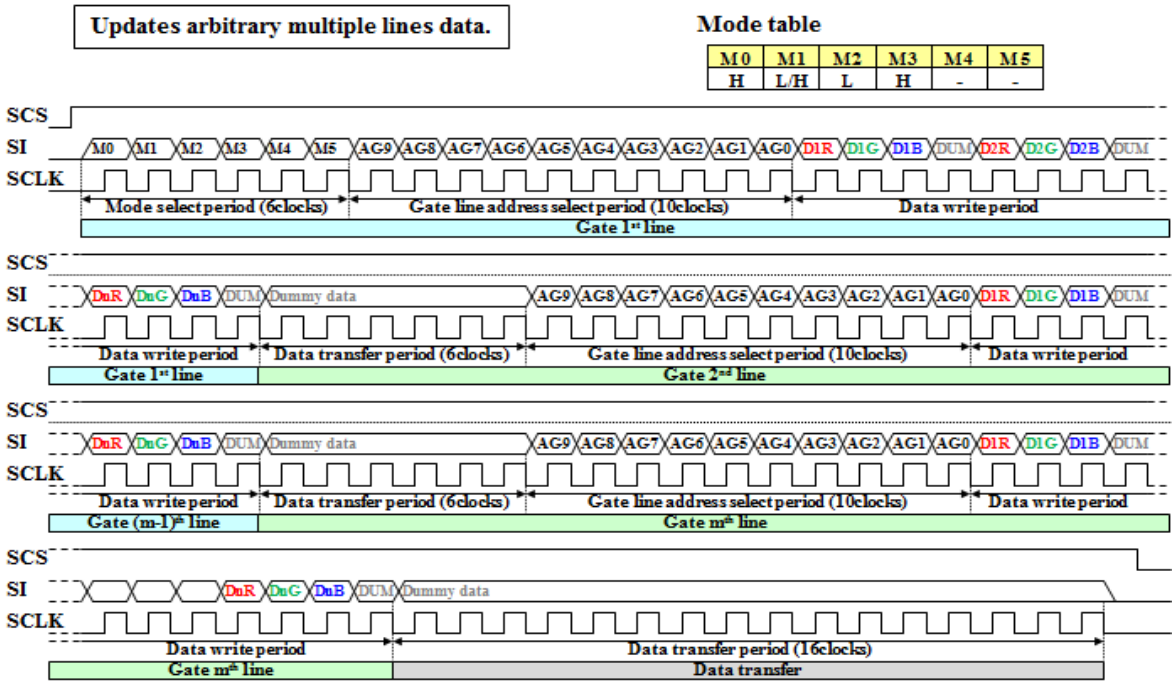

M0 : Mode flag. Set “H”, data update mode.

M1 : COM inversion flag. In the case of EXTMODE=“L”, it is valid.

In the case of “H”, outputs COM=“H”.

In the case of “L”, outputs COM=“L”.

In the case of EXTMODE=“H”, it is invalid, it can be “H” or “L”.

M2 : All clear flag. Set “L”, data update mode.

M3 : Data-bit control flag. In the case of M3=“H”, 4bit-data mode.

M4-M5 : Invalid data, it can be “H” or “L”.

AG9-AG0 : Gate line address (10bit), refer to the Gate line address table.

Data : Pixel memory data. In the case of “L”, pixel is black.

In the case of 4bit-data mode,

input serially the pixel data in the order of Red-Green-Blue-Dummy (4bit).

Dummy data (DUM) can be “H” or “L”.

n : Number of horizontal line, refer to the Display address map and Pixel layout.

Dummy data : It can be “H” or “L”.

Input data continuously.

m : Number of vertical line, refer to the Display address map and Pixel layout.

Insert transfer period which is 6clocks between the gate line and the next gate line.

Insert transfer period which is 16clocks after the last data.

M0, M2 flags are cleared by SCS=“L”, and M3 flag is cleared by DISP=“L”.

6.7 NO-UPDATE MODE

Keeps memory internal data (current display).

Mode table

M0	M1	M2	M3	M4	M5
L	L/H	L	L	-	-

M0	M1	M2	M3	M4	M5
H	L/H	H	L	-	-

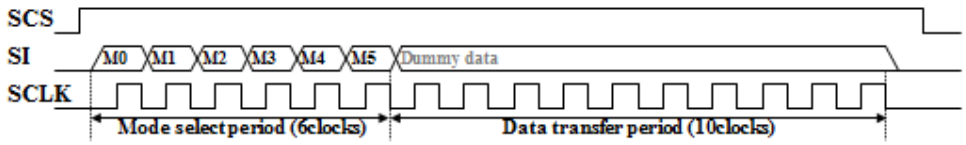

M0 : Mode flag.

M1 : COM inversion flag. In the case of EXTMODE="L", it is valid.

In the case of "H", outputs COM="H".

In the case of "L", outputs COM="L".

In the case of EXTMODE="H", it is invalid, it can be "H" or "L".

M2 : All clear flag.

Set "L" or "H" to both M0 and M2, no-update mode.

M3 : Blinking flag. In the case of "L", no-update mode and display blinking mode is terminated.

In the case of "H", display blinking mode. Refer to the 6.9 for details.

M4-M5 : Invalid data, it can be "H" or "L".

Dummy data : It can be "H" or "L".

M0, M2 flags are cleared by SCS="L", and M3 flag is cleared by DISP="L".

6.8 ALL CLEAR MODE

Clears memory internal data and writes initial data.
Initial data is black.

Mode table

M0	M1	M2	M3	M4	M5
L	L/H	H	L/H	L/H	L/H

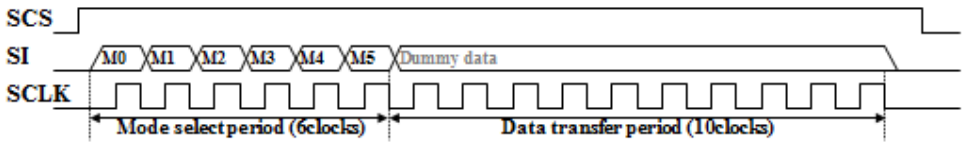

M0 : Mode flag. Set “L”, no-update mode.

M1 : COM inversion flag. In the case of EXTMODE=“L”, it is valid.
In the case of “H”, outputs COM=“H”.
In the case of “L”, outputs COM=“L”.
In the case of EXTMODE=“H”, it is invalid, it can be “H” or “L”.

M2 : All clear flag. Set “H”, all clear mode.

M3 : Blinking flag. In the case of “L”, display blinking mode is terminated.
In the case of “H”, display blinking mode. Refer to the 6.9 for details.

M4-M5 : Blinking mode flag. In the case of M3=“H”, it is valid.
In the case of M3=“L”, it is invalid, it can be “H” or “L”.

Dummy data : It can be “H” or “L”.

M0, M2 flags are cleared by SCS=“L”, and M3-M4 flags are cleared by DISP=“L”.

Display gives priority to blinking flag (M3).

6.9 DISPLAY BLINKING COLOR MODE

Forcibly display blinking color.
Keeps memory internal data, but ignored.

Mode table

M0	M1	M2	M3	M4	M5
L	L/H	L	H	L/H	L

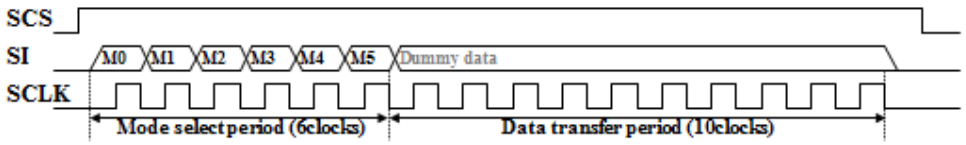

M0 : Mode flag. Set “L”, no-update mode.

M1 : COM inversion flag. In the case of EXTMODE=“L”, it is valid.

In the case of “H”, outputs COM=“H”.

In the case of “L”, outputs COM=“L”.

In the case of EXTMODE=“H”, it is invalid, it can be “H” or “L”.

M2 : All clear flag. Set “L”, no-update mode.

In the case of “H”, all clear mode. Refer to the 6.8 for details.

M3 : Blinking flag. In the case of “H”, display blinking mode.

In the case of “L”, display blinking mode is terminated.

M4 : Blinking color flag. Apply to display blinking color.

In the case of “H”, solid white color is forcibly displayed.

In the case of “L”, solid black color is forcibly displayed.

M5 : Blinking inversion flag. Set “L”, blinking color mode.

Dummy data : It can be “H” or “L”.

M0, M2 flags are cleared by SCS=“L”, and M3-M5 flags are cleared by DISP=“L”.

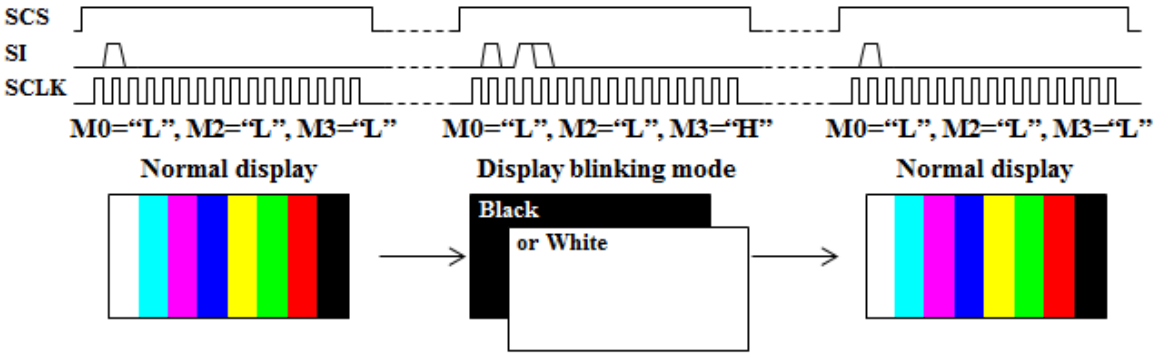

Blink display to alternate between normal display and display blinking mode.

6.10 DISPLAY COLOR INVERSION MODE

Forcibly display color inversion.
Keeps memory internal data, but ignored.

Mode table

M0	M1	M2	M3	M4	M5
L	L/H	L	H	-	H

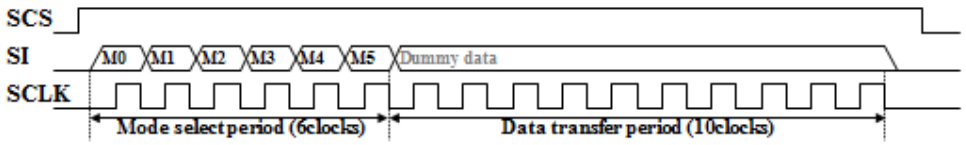

M0 : Mode flag. Set “L”, no-update mode.

M1 : COM inversion flag. In the case of EXTMODE=“L”, it is valid.
In the case of “H”, outputs COM=“H”.
In the case of “L”, outputs COM=“L”.
In the case of EXTMODE=“H”, it is invalid, it can be “H” or “L”.

M2 : All clear flag. Set “L”, no-update mode.
In the case of “H”, all clear mode. Refer to the 6.8 for details.

M3 : Blinking flag. In the case of “H”, display blinking mode and forcibly display color inversion.
In the case of “L”, display blinking mode is terminated.

M4 : Blinking color flag. In the case of M5=“H”, it is invalid, it can be “H” or “L”.
In the case of M5=“L”, refer to the 6.9 for details.

M5 : Color inversion flag. Set “H”, display color is inverted.
For example, “Red” is changed to “Cyan”.
“Cyan” is complementary color of “Red”.

Dummy data : It can be “H” or “L”.

M0, M2 flags are cleared by SCS=“L”, and M3, M5 flags are cleared by DISP=“L”.

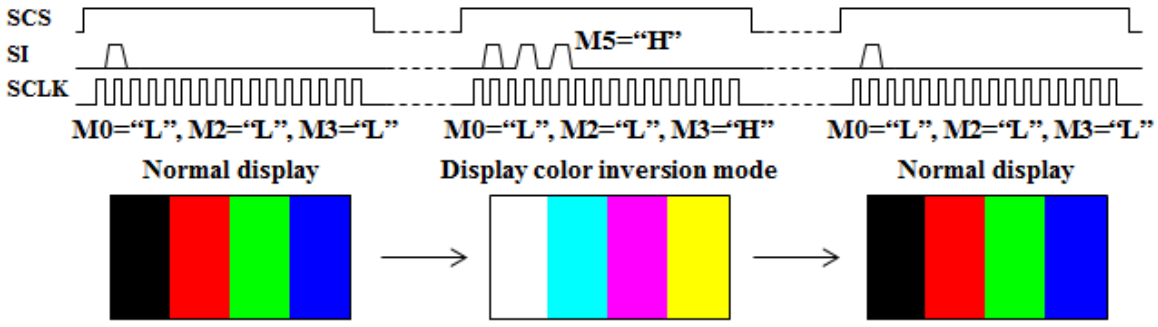

Blink display to alternate between normal display and display blinking mode.

7. COM INVERSION

7.1 COM POLARITY SERIAL INPUT / EXTMODE = “L”

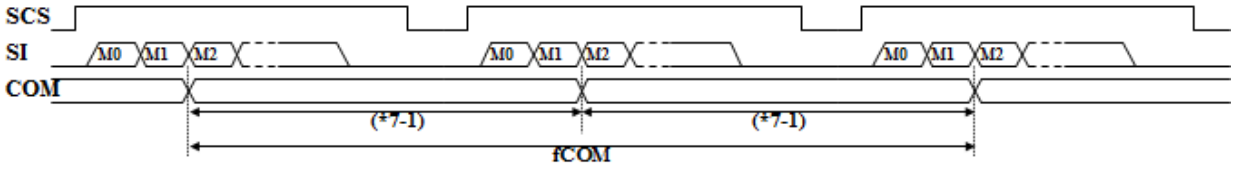

M1 : COM inversion flag. In thae case of “H”, outputs COM=“H”. In the case of “L”, outputs COM=“L”.

COM polarity inversion has been changed by M1 flag state.

(*7-1) The periods of positive and negative polarity should be same length as much as possible.

7.2 EXTCOMIN SIGNAL / EXTMODE=“H”

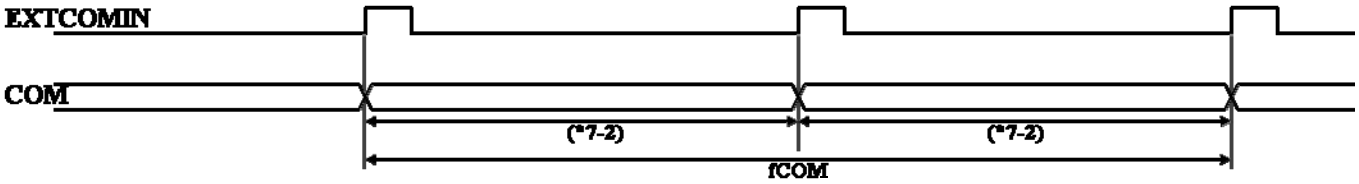

COM polarity inversion has been changed by the rising timing of EXTCOMIN.

COM polarity (positive or negative) is controlled by internal circuit.

(*7-2) The periods of positive and negative polarity should be same length as much as possible.

8. GATE LINE ADDRESS TABLE

LPM044M141 : V1- V255

V	AG9	AG8	AG7	AG6	AG5	AG4	AG3	AG2	AG1	AG0
0	0	0	0	0	0	0	0	0	0	0
1	0	0	0	0	0	0	0	0	0	1
2	0	0	0	0	0	0	0	0	1	0
3	0	0	0	0	0	0	0	0	1	1
4	0	0	0	0	0	0	0	1	0	0
5	0	0	0	0	0	0	0	1	0	1
6	0	0	0	0	0	0	0	1	1	0
7	0	0	0	0	0	0	0	1	1	1
8	0	0	0	0	0	0	1	0	0	0
9	0	0	0	0	0	0	1	0	0	1
10	0	0	0	0	0	0	1	0	1	0
11	0	0	0	0	0	0	1	0	1	1
12	0	0	0	0	0	0	1	1	0	0
13	0	0	0	0	0	0	1	1	0	1
14	0	0	0	0	0	0	1	1	1	0
15	0	0	0	0	0	0	1	1	1	1
16	0	0	0	0	0	1	0	0	0	0
17	0	0	0	0	0	1	0	0	0	1
18	0	0	0	0	0	1	0	0	1	0
19	0	0	0	0	0	1	0	0	1	1
20	0	0	0	0	0	1	0	1	0	0
21	0	0	0	0	0	1	0	1	0	1
22	0	0	0	0	0	1	0	1	1	0
23	0	0	0	0	0	1	0	1	1	1
24	0	0	0	0	0	1	1	0	0	0
25	0	0	0	0	0	1	1	0	0	1
26	0	0	0	0	0	1	1	0	1	0
27	0	0	0	0	0	1	1	0	1	1
28	0	0	0	0	0	1	1	1	0	0
29	0	0	0	0	0	1	1	1	0	1
30	0	0	0	0	0	1	1	1	1	0
31	0	0	0	0	0	1	1	1	1	1
32	0	0	0	0	1	0	0	0	0	0
33	0	0	0	0	1	0	0	0	0	1
34	0	0	0	0	1	0	0	0	1	0
35	0	0	0	0	1	0	0	0	1	1
36	0	0	0	0	1	0	0	1	0	0
37	0	0	0	0	1	0	0	1	0	1
38	0	0	0	0	1	0	0	1	1	0
39	0	0	0	0	1	0	0	1	1	1
40	0	0	0	0	1	0	1	0	0	0
41	0	0	0	0	1	0	1	0	0	1
42	0	0	0	0	1	0	1	0	1	0
43	0	0	0	0	1	0	1	0	1	1
44	0	0	0	0	1	0	1	1	0	0
45	0	0	0	0	1	0	1	1	0	1
46	0	0	0	0	1	0	1	1	1	0
47	0	0	0	0	1	0	1	1	1	1
48	0	0	0	0	1	1	0	0	0	0
49	0	0	0	0	1	1	0	0	0	1
50	0	0	0	0	1	1	0	0	1	0
51	0	0	0	0	1	1	0	0	1	1
52	0	0	0	0	1	1	0	1	0	0
53	0	0	0	0	1	1	0	1	0	1
54	0	0	0	0	1	1	0	1	1	0
55	0	0	0	0	1	1	0	1	1	1
56	0	0	0	0	1	1	1	0	0	0
57	0	0	0	0	1	1	1	0	0	1
58	0	0	0	0	1	1	1	0	1	0
59	0	0	0	0	1	1	1	0	1	1
60	0	0	0	0	1	1	1	1	0	0
61	0	0	0	0	1	1	1	1	0	1
62	0	0	0	0	1	1	1	1	1	0
63	0	0	0	0	1	1	1	1	1	1
64	0	0	0	1	0	0	0	0	0	0
65	0	0	0	1	0	0	0	0	0	1
66	0	0	0	1	0	0	0	0	1	0
67	0	0	0	1	0	0	0	0	1	1
68	0	0	0	1	0	0	0	1	0	0
69	0	0	0	1	0	0	0	1	0	1
70	0	0	0	1	0	0	0	1	1	0
71	0	0	0	1	0	0	0	1	1	1
72	0	0	0	1	0	0	1	0	0	0
73	0	0	0	1	0	0	1	0	0	1
74	0	0	0	1	0	0	1	0	1	0
75	0	0	0	1	0	0	1	0	1	1
76	0	0	0	1	0	0	1	1	0	0
77	0	0	0	1	0	0	1	1	0	1
78	0	0	0	1	0	0	1	1	1	0
79	0	0	0	1	0	0	1	1	1	1
80	0	0	0	1	0	1	0	0	0	0
81	0	0	0	1	0	1	0	0	0	1
82	0	0	0	1	0	1	0	0	1	0
83	0	0	0	1	0	1	0	0	1	1
84	0	0	0	1	0	1	0	1	0	0
85	0	0	0	1	0	1	0	1	0	1
86	0	0	0	1	0	1	0	1	1	0
87	0	0	0	1	0	1	0	1	1	1
88	0	0	0	1	0	1	1	0	0	0
89	0	0	0	1	0	1	1	0	0	1
90	0	0	0	1	0	1	1	0	1	0
91	0	0	0	1	0	1	1	0	1	1
92	0	0	0	1	0	1	1	1	0	0
93	0	0	0	1	0	1	1	1	0	1
94	0	0	0	1	0	1	1	1	1	0
95	0	0	0	1	0	1	1	1	1	1
96	0	0	0	1	1	0	0	0	0	0
97	0	0	0	1	1	0	0	0	0	1
98	0	0	0	1	1	0	0	0	1	0
99	0	0	0	1	1	0	0	0	1	1
100	0	0	0	1	1	0	0	1	0	0
101	0	0	0	1	1	0	0	1	0	1
102	0	0	0	1	1	0	0	1	1	0
103	0	0	0	1	1	0	0	1	1	1
104	0	0	0	1	1	0	1	0	0	0
105	0	0	0	1	1	0	1	0	0	1
106	0	0	0	1	1	0	1	0	1	0
107	0	0	0	1	1	0	1	0	1	1
108	0	0	0	1	1	0	1	1	0	0
109	0	0	0	1	1	0	1	1	0	1
110	0	0	0	1	1	0	1	1	1	0
111	0	0	0	1	1	0	1	1	1	1
112	0	0	0	1	1	1	0	0	0	0
113	0	0	0	1	1	1	0	0	0	1
114	0	0	0	1	1	1	0	0	1	0
115	0	0	0	1	1	1	0	0	1	1
116	0	0	0	1	1	1	0	1	0	0
117	0	0	0	1	1	1	0	1	0	1
118	0	0	0	1	1	1	0	1	1	0
119	0	0	0	1	1	1	0	1	1	1
120	0	0	0	1	1	1	1	0	0	0
121	0	0	0	1	1	1	1	0	0	1
122	0	0	0	1	1	1	1	0	1	0
123	0	0	0	1	1	1	1	0	1	1
124	0	0	0	1	1	1	1	1	0	0
125	0	0	0	1	1	1	1	1	0	1
126	0	0	0	1	1	1	1	1	1	0
127	0	0	0	1	1	1	1	1	1	1
128	0	0	1	0	0	0	0	0	0	0
129	0	0	1	0	0	0	0	0	0	1
130	0	0	1	0	0	0	0	0	1	0
131	0	0	1	0	0	0	0	0	1	1
132	0	0	1	0	0	0	0	1	0	0
133	0	0	1	0	0	0	0	1	0	1
134	0	0	1	0	0	0	0	1	1	0
135	0	0	1	0	0	0	0	1	1	1
136	0	0	1	0	0	0	1	0	0	0
137	0	0	1	0	0	0	1	0	0	1
138	0	0	1	0	0	0	1	0	1	0
139	0	0	1	0	0	0	1	0	1	1
140	0	0	1	0	0	0	1	1	0	0
141	0	0	1	0	0	0	1	1	0	1
142	0	0	1	0	0	0	1	1	1	0
143	0	0	1	0	0	0	1	1	1	1
144	0	0	1	0	0	1	0	0	0	0
145	0	0	1	0	0	1	0	0	0	1
146	0	0	1	0	0	1	0	0	1	0
147	0	0	1	0	0	1	0	0	1	1
148	0	0	1	0	0	1	0	1	0	0
149	0	0	1	0	0	1	0	1	0	1
150	0	0	1	0	0	1	0	1	1	0
151	0	0	1	0	0	1	0	1	1	1
152	0	0	1	0	0	1	1	0	0	0
153	0	0	1	0	0	1	1	0	0	1
154	0	0	1	0	0	1	1	0	1	0
155	0	0	1	0	0	1	1	0	1	1
156	0	0	1	0	0	1	1	1	0	0
157	0	0	1	0	0	1	1	1	0	1
158	0	0	1	0	0	1	1	1	1	0
159	0	0	1	0	0	1	1	1	1	1
160	0	0	1	0	1	0	0	0	0	0
161	0	0	1	0	1	0	0	0	0	1
162	0	0	1	0	1	0	0	0	1	0
163	0	0	1	0	1	0	0	0	1	1
164	0	0	1	0	1	0	0	1	0	0
165	0	0	1	0	1	0	0	1	0	1
166	0	0	1	0	1	0	0	1	1	0
167	0	0	1	0	1	0	0	1	1	1
168	0	0	1	0	1	0	1	0	0	0
169	0	0	1	0	1	0	1	0	0	1
170	0	0	1	0	1	0	1	0	1	0
171	0	0	1	0	1	0	1	0	1	1
172	0	0	1	0	1	0	1	1	0	0
173	0	0	1	0	1	0	1	1	0	1
174	0	0	1	0	1	0	1	1	1	0
175	0	0	1	0	1	0	1	1	1	1
176	0	0	1	0	1	1	0	0	0	0
177	0	0	1	0	1	1	0	0	0	1
178	0	0	1	0	1	1	0	0	1	0
179	0	0	1	0	1	1	0	0	1	1
180	0	0	1	0	1	1	0	1	0	0
181	0	0	1	0	1	1	0	1	0	1
182	0	0	1	0	1	1	0	1	1	0
183	0	0	1	0	1	1	0	1	1	1
184	0	0	1	0	1	1	1	0	0	0
185	0	0	1	0	1	1	1	0	0	1
186	0	0	1	0	1	1	1	0	1	0
187	0	0	1	0	1	1	1	0	1	1
188	0	0	1	0	1	1	1	1	0	0
189	0	0	1	0	1	1	1	1	0	1
190	0	0	1	0	1	1	1	1	1	0
191	0	0	1	0	1	1	1	1	1	1
192	0	0	1	1	0	0	0	0	0	0
193	0	0	1	1	0	0	0	0	0	1
194	0	0	1	1	0	0	0	0	1	0
195	0	0	1	1	0	0	0	0	1	1
196	0	0	1	1	0	0	0	1	0	0
197	0	0	1	1	0	0	0	1	0	1
198	0	0	1	1	0	0	0	1	1	0
199	0	0	1	1	0	0	0	1	1	1
200	0	0	1	1	0	0	1	0	0	0
201	0	0	1	1	0	0	1	0	0	1
202	0	0	1	1	0	0	1	0	1	0
203	0	0	1	1	0	0	1	0	1	1
204	0	0	1	1	0	0	1	1	0	0
205	0	0	1	1	0	0	1	1	0	1
206	0	0	1	1	0	0	1	1	1	0
207	0	0	1	1	0	0	1	1	1	1
208	0	0	1	1	0	1	0	0	0	0
209	0	0	1	1	0	1	0	0	0	1
210	0	0	1	1	0	1	0	0	1	0
211	0	0	1	1	0	1	0	0	1	1
212	0	0	1	1	0	1	0	1	0	0
213	0	0	1	1	0	1	0	1	0	1
214	0	0	1	1	0	1	0	1	1	0
215	0	0	1	1	0	1	0	1	1	1
216	0	0	1	1	0	1	1	0	0	0
217	0	0	1	1	0	1	1	0	0	1
218	0	0	1	1	0	1	1	0	1	0
219	0	0	1	1	0	1	1	0	1	1
220	0	0	1	1	0	1	1	1	0	0
221	0	0	1	1	0	1	1	1	0	1
222	0	0	1	1	0	1	1	1	1	0
223	0	0	1	1	0	1	1	1	1	1
224	0	0	1	1	1	0	0	0	0	0
225	0	0	1	1	1	0	0	0	0	1
226	0	0	1	1	1	0	0	0	1	0
227	0	0	1	1	1	0	0	0	1	1
228	0	0	1	1	1	0	0	1	0	0
229	0	0	1	1	1	0	0	1	0	1
230	0	0	1	1	1	0	0	1	1	0
231	0	0	1	1	1	0	0	1	1	1
232	0	0	1	1	1	0	1	0	0	0
233	0	0	1	1	1	0	1	0	0	1
234	0	0	1	1	1	0	1	0	1	0
235	0	0	1	1	1	0	1	0	1	1
236	0	0	1	1	1	0	1	1	0	0
237	0	0	1	1	1	0	1	1	0	1
238	0	0	1	1	1	0	1	1	1	0
239	0	0	1	1	1	0	1	1	1	1
240	0	0	1	1	1	1	0	0	0	0
241	0	0	1	1	1	1	0	0	0	1
242	0	0	1	1	1	1	0	0	1	0
243	0	0	1	1	1	1	0	0	1	1
244	0	0	1	1	1	1	0	1	0	0
245	0	0	1	1	1	1	0	1	0	1
246	0	0	1	1	1	1	0	1	1	0
247	0	0	1	1	1	1	0	1	1	1
248	0	0	1	1	1	1	1	0	0	0
249	0	0	1	1	1	1	1	0	0	1
250	0	0	1	1	1	1	1	0	1	0
251	0	0	1	1	1	1	1	0	1	1
252	0	0	1	1	1	1	1	1	0	0
253	0	0	1	1	1	1	1	1	0	1
254	0	0	1	1	1	1	1	1	1	0
255	0	0	1	1	1	1	1	1	1	1

LPM044M141 : V256- V480

V	AG9	AG8	AG7	AG6	AG5	AG4	AG3	AG2	AG1	AG0
256	0	1	0	0	0	0	0	0	0	0
257	0	1	0	0	0	0	0	0	0	1
258	0	1	0	0	0	0	0	0	1	0
259	0	1	0	0	0	0	0	0	1	1
260	0	1	0	0	0	0	0	1	0	0
261	0	1	0	0	0	0	0	1	0	1
262	0	1	0	0	0	0	0	1	1	0
263	0	1	0	0	0	0	0	1	1	1
264	0	1	0	0	0	0	1	0	0	0
265	0	1	0	0	0	0	1	0	0	1
266	0	1	0	0	0	0	1	0	1	0
267	0	1	0	0	0	0	1	0	1	1
268	0	1	0	0	0	0	1	1	0	0
269	0	1	0	0	0	0	1	1	0	1
270	0	1	0	0	0	0	1	1	1	0
271	0	1	0	0	0	0	1	1	1	1
272	0	1	0	0	0	1	0	0	0	0
273	0	1	0	0	0	1	0	0	0	1
274	0	1	0	0	0	1	0	0	1	0
275	0	1	0	0	0	1	0	0	1	1
276	0	1	0	0	0	1	0	1	0	0
277	0	1	0	0	0	1	0	1	0	1
278	0	1	0	0	0	1	0	1	1	0
279	0	1	0	0	0	1	0	1	1	1
280	0	1	0	0	0	1	1	0	0	0
281	0	1	0	0	0	1	1	0	0	1
282	0	1	0	0	0	1	1	0	1	0
283	0	1	0	0	0	1	1	0	1	1
284	0	1	0	0	0	1	1	1	0	0
285	0	1	0	0	0	1	1	1	0	1
286	0	1	0	0	0	1	1	1	1	0
287	0	1	0	0	0	1	1	1	1	1
288	0	1	0	0	1	0	0	0	0	0
289	0	1	0	0	1	0	0	0	0	1
290	0	1	0	0	1	0	0	0	1	0
291	0	1	0	0	1	0	0	0	1	1
292	0	1	0	0	1	0	0	1	0	0
293	0	1	0	0	1	0	0	1	0	1
294	0	1	0	0	1	0	0	1	1	0
295	0	1	0	0	1	0	0	1	1	1
296	0	1	0	0	1	0	1	0	0	0
297	0	1	0	0	1	0	1	0	0	1
298	0	1	0	0	1	0	1	0	1	0
299	0	1	0	0	1	0	1	0	1	1
300	0	1	0	0	1	0	1	1	0	0
301	0	1	0	0	1	0	1	1	0	1
302	0	1	0	0	1	0	1	1	1	0
303	0	1	0	0	1	0	1	1	1	1
304	0	1	0	0	1	1	0	0	0	0
305	0	1	0	0	1	1	0	0	0	1
306	0	1	0	0	1	1	0	0	1	0
307	0	1	0	0	1	1	0	0	1	1
308	0	1	0	0	1	1	0	1	0	0
309	0	1	0	0	1	1	0	1	0	1
310	0	1	0	0	1	1	0	1	1	0
311	0	1	0	0	1	1	0	1	1	1
312	0	1	0	0	1	1	1	0	0	0
313	0	1	0	0	1	1	1	0	0	1
314	0	1	0	0	1	1	1	0	1	0
315	0	1	0	0	1	1	1	0	1	1
316	0	1	0	0	1	1	1	1	0	0
317	0	1	0	0	1	1	1	1	0	1
318	0	1	0	0	1	1	1	1	1	0
319	0	1	0	0	1	1	1	1	1	1
320	0	1	0	1	0	0	0	0	0	0
321	0	1	0	1	0	0	0	0	0	1
322	0	1	0	1	0	0	0	0	1	0
323	0	1	0	1	0	0	0	0	1	1
324	0	1	0	1	0	0	0	1	0	0
325	0	1	0	1	0	0	0	1	0	1
326	0	1	0	1	0	0	0	1	1	0
327	0	1	0	1	0	0	0	1	1	1
328	0	1	0	1	0	0	1	0	0	0
329	0	1	0	1	0	0	1	0	0	1
330	0	1	0	1	0	0	1	0	1	0
331	0	1	0	1	0	0	1	0	1	1
332	0	1	0	1	0	0	1	1	0	0
333	0	1	0	1	0	0	1	1	0	1
334	0	1	0	1	0	0	1	1	1	0
335	0	1	0	1	0	0	1	1	1	1
336	0	1	0	1	0	1	0	0	0	0
337	0	1	0	1	0	1	0	0	0	1
338	0	1	0	1	0	1	0	0	1	0
339	0	1	0	1	0	1	0	0	1	1
340	0	1	0	1	0	1	0	1	0	0
341	0	1	0	1	0	1	0	1	0	1
342	0	1	0	1	0	1	0	1	1	0
343	0	1	0	1	0	1	0	1	1	1
344	0	1	0	1	0	1	1	0	0	0
345	0	1	0	1	0	1	1	0	0	1
346	0	1	0	1	0	1	1	0	1	0
347	0	1	0	1	0	1	1	0	1	1
348	0	1	0	1	0	1	1	1	0	0
349	0	1	0	1	0	1	1	1	0	1
350	0	1	0	1	0	1	1	1	1	0
351	0	1	0	1	0	1	1	1	1	1
352	0	1	0	1	1	0	0	0	0	0
353	0	1	0	1	1	0	0	0	0	1
354	0	1	0	1	1	0	0	0	1	0
355	0	1	0	1	1	0	0	0	1	1
356	0	1	0	1	1	0	0	1	0	0
357	0	1	0	1	1	0	0	1	0	1
358	0	1	0	1	1	0	0	1	1	0
359	0	1	0	1	1	0	0	1	1	1
360	0	1	0	1	1	0	1	0	0	0
361	0	1	0	1	1	0	1	0	0	1
362	0	1	0	1	1	0	1	0	1	0
363	0	1	0	1	1	0	1	0	1	1
364	0	1	0	1	1	0	1	1	0	0
365	0	1	0	1	1	0	1	1	0	1
366	0	1	0	1	1	0	1	1	1	0
367	0	1	0	1	1	0	1	1	1	1
368	0	1	0	1	1	1	0	0	0	0
369	0	1	0	1	1	1	0	0	0	1
370	0	1	0	1	1	1	0	0	1	0
371	0	1	0	1	1	1	0	0	1	1
372	0	1	0	1	1	1	0	1	0	0
373	0	1	0	1	1	1	0	1	0	1
374	0	1	0	1	1	1	0	1	1	0
375	0	1	0	1	1	1	0	1	1	1
376	0	1	0	1	1	1	1	0	0	0
377	0	1	0	1	1	1	1	0	0	1
378	0	1	0	1	1	1	1	0	1	0
379	0	1	0	1	1	1	1	0	1	1
380	0	1	0	1	1	1	1	1	0	0
381	0	1	0	1	1	1	1	1	0	1
382	0	1	0	1	1	1	1	1	1	0
383	0	1	0	1	1	1	1	1	1	1
384	0	1	1	0	0	0	0	0	0	0
385	0	1	1	0	0	0	0	0	0	1
386	0	1	1	0	0	0	0	0	1	0
387	0	1	1	0	0	0	0	0	1	1
388	0	1	1	0	0	0	0	1	0	0
389	0	1	1	0	0	0	0	1	0	1
390	0	1	1	0	0	0	0	1	1	0
391	0	1	1	0	0	0	0	1	1	1
392	0	1	1	0	0	0	1	0	0	0
393	0	1	1	0	0	0	1	0	0	1
394	0	1	1	0	0	0	1	0	1	0
395	0	1	1	0	0	0	1	0	1	1
396	0	1	1	0	0	0	1	1	0	0
397	0	1	1	0	0	0	1	1	0	1
398	0	1	1	0	0	0	1	1	1	0
399	0	1	1	0	0	0	1	1	1	1
400	0	1	1	0	0	1	0	0	0	0
401	0	1	1	0	0	1	0	0	0	1
402	0	1	1	0	0	1	0	0	1	0
403	0	1	1	0	0	1	0	0	1	1
404	0	1	1	0	0	1	0	1	0	0
405	0	1	1	0	0	1	0	1	0	1
406	0	1	1	0	0	1	0	1	1	0
407	0	1	1	0	0	1	0	1	1	1
408	0	1	1	0	0	1	1	0	0	0
409	0	1	1	0	0	1	1	0	0	1
410	0	1	1	0	0	1	1	0	1	0
411	0	1	1	0	0	1	1	0	1	1
412	0	1	1	0	0	1	1	1	0	0
413	0	1	1	0	0	1	1	1	0	1
414	0	1	1	0	0	1	1	1	1	0
415	0	1	1	0	0	1	1	1	1	1
416	0	1	1	0	1	0	0	0	0	0
417	0	1	1	0	1	0	0	0	0	1
418	0	1	1	0	1	0	0	0	1	0
419	0	1	1	0	1	0	0	0	1	1
420	0	1	1	0	1	0	0	1	0	0
421	0	1	1	0	1	0	0	1	0	1
422	0	1	1	0	1	0	0	1	1	0
423	0	1	1	0	1	0	0	1	1	1
424	0	1	1	0	1	0	1	0	0	0
425	0	1	1	0	1	0	1	0	0	1
426	0	1	1	0	1	0	1	0	1	0
427	0	1	1	0	1	0	1	0	1	1
428	0	1	1	0	1	0	1	1	0	0
429	0	1	1	0	1	0	1	1	0	1
430	0	1	1	0	1	0	1	1	1	0
431	0	1	1	0	1	0	1	1	1	1
432	0	1	1	0	1	1	0	0	0	0
433	0	1	1	0	1	1	0	0	0	1
434	0	1	1	0	1	1	0	0	1	0
435	0	1	1	0	1	1	0	0	1	1
436	0	1	1	0	1	1	0	1	0	0
437	0	1	1	0	1	1	0	1	0	1
438	0	1	1	0	1	1	0	1	1	0
439	0	1	1	0	1	1	0	1	1	1
440	0	1	1	0	1	1	1	0	0	0
441	0	1	1	0	1	1	1	0	0	1
442	0	1	1	0	1	1	1	0	1	0
443	0	1	1	0	1	1	1	0	1	1
444	0	1	1	0	1	1	1	1	0	0
445	0	1	1	0	1	1	1	1	0	1
446	0	1	1	0	1	1	1	1	1	0
447	0	1	1	0	1	1	1	1	1	1
448	0	1	1	1	0	0	0	0	0	0
449	0	1	1	1	0	0	0	0	0	1
450	0	1	1	1	0	0	0	0	1	0
451	0	1	1	1	0	0	0	0	1	1
452	0	1	1	1	0	0	0	1	0	0
453	0	1	1	1	0	0	0	1	0	1
454	0	1	1	1	0	0	0	1	1	0
455	0	1	1	1	0	0	0	1	1	1
456	0	1	1	1	0	0	1	0	0	0
457	0	1	1	1	0	0	1	0	0	1
458	0	1	1	1	0	0	1	0	1	0
459	0	1	1	1	0	0	1	0	1	1
460	0	1	1	1	0	0	1	1	0	0
461	0	1	1	1	0	0	1	1	0	1
462	0	1	1	1	0	0	1	1	1	0
463	0	1	1	1	0	0	1	1	1	1
464	0	1	1	1	0	1	0	0	0	0
465	0	1	1	1	0	1	0	0	0	1
466	0	1	1	1	0	1	0	0	1	0
467	0	1	1	1	0	1	0	0	1	1
468	0	1	1	1	0	1	0	1	0	0
469	0	1	1	1	0	1	0	1	0	1
470	0	1	1	1	0	1	0	1	1	0
471	0	1	1	1	0	1	0	1	1	1
472	0	1	1	1	0	1	1	0	0	0
473	0	1	1	1	0	1	1	0	0	1
474	0	1	1	1	0	1	1	0	1	0
475	0	1	1	1	0	1	1	0	1	1
476	0	1	1	1	0	1	1	1	0	0
477	0	1	1	1	0	1	1	1	0	1
478	0	1	1	1	0	1	1	1	1	0
479	0	1	1	1	0	1	1	1	1	1
480	0	1	1	1	1	0	0	0	0	0

9. OPTICAL SPECIFICATION

9.1 OPTICAL CHARACTERISTICS

9.1.1 Reflective mode

* VDD=3.0V,VDDA=3.0V,VIH=3.0V,VIL=0V

Item	Symbol	Temp. (°C)	Rating			Unit	definition (Measurement setup)	Remark
			Min.	Typ.	Max.			
Contrast	*CR*	25	(20)	40	-	-	1	
Response	*tr*	25	-	4	8	ms	2	Black ➔ White
	tf		-	6	12			White ➔ Black
Color coordinates	*Rx*	25	-	0.510	-	-	3	
	Ry		-	0.315	-			
	Gx		-	0.300	-			
	Gy		-	0.450	-			
	Bx		-	0.160	-			
	By		-	0.180	-			
	Wx		-	0.300	-			
	Wy		-	0.330	-			
NTSC ratio	-	25		23	-	%	4	
Reflectance	-	25	(10)	18	-	%	-	
Viewing Angle (CR>2)	θL	25	(55)	70	-	°	5	Horizontal
	θR		(55)	70	-			
	θT		(55)	70	-			Vertical
	θB		(55)	70	-			

*( ) : Reference value

9.1.2 Transmissive mode

* VDD=3.0V,VDDA=3.0V,VIH=3.0V,VIL=0V

*COM frequency should be around 60 Hz (EXTCOMIN frequency : around 120Hz) for transmissive mode.

Item	Symbol	Temp. (°C)	Rating			Unit	definition (Measurement setup)	Remark
			Min.	Typ.	Max.			
Transmittance	*T*	25		0.3	-	%	6	

9.2 DEFINITION AND CONDITION OF OPTICAL CHARACTERISTICS

9.2.1 Definitions of optical characteristics

Definition 1

This is a ratio between the screen surface reflectance of the white raster and the black raster

$$\text{Contrast ratio (CR)} = \frac{\text{Reflection intensity on all pixels White}}{\text{Reflection intensity on all pixels Black}}$$

Definition 2

The response time is defined as the following figure and shall be measured by matching the input signal for “Black” and “White”.

・Normally Black mode

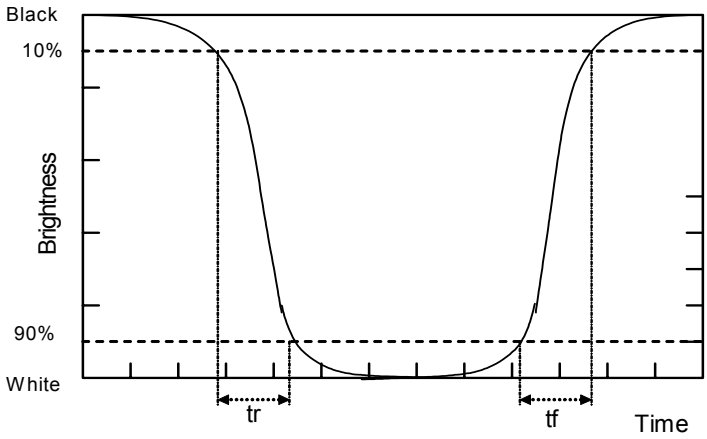

tr：Response time from Black to White

tf：Response time from White to Black

Definition 3

This is the x-y coordinate of Red, Green, Blue and White colors specified on the CIE1931 chromaticity diagram. (* It is not a guaranteed value)

Definition 4

This is an area of a triangle shaped by R, G and B coordinates on the CIE1931 chromaticity diagram.

Definition 5

This is a maximum angle θ from the normal direction that keeps having the contrast more than 2.

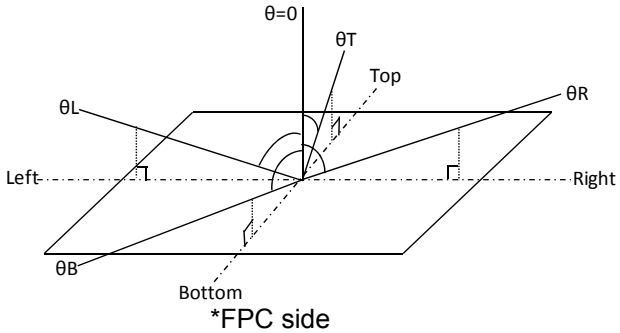

*FPC side

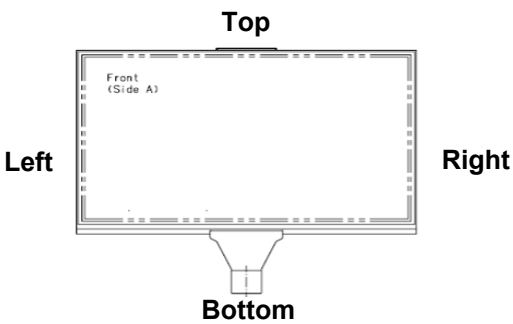

Definition 6

Transmittance is defined by the result of measuring backlight owned by Japan Display Inc.

- Measurement method of optical characteristics -

< Basic measurement conditions >

a) Driving voltage

VDD=3.0V

VDDA=3.0V

VIH = 3.0V

VIL = 0V

b) Measurement temperature

25°C unless otherwise specified

c) Measurement point

Center of the Active area (one point) unless otherwise specified

< Measurement system-I for reflective mode >

Light source

Parallel light source

- D65 / 2 degree viewing angle
- Light source input direction : from opposite side of FPC side (30°)
- Light source receive direction : at LCD center (0°)

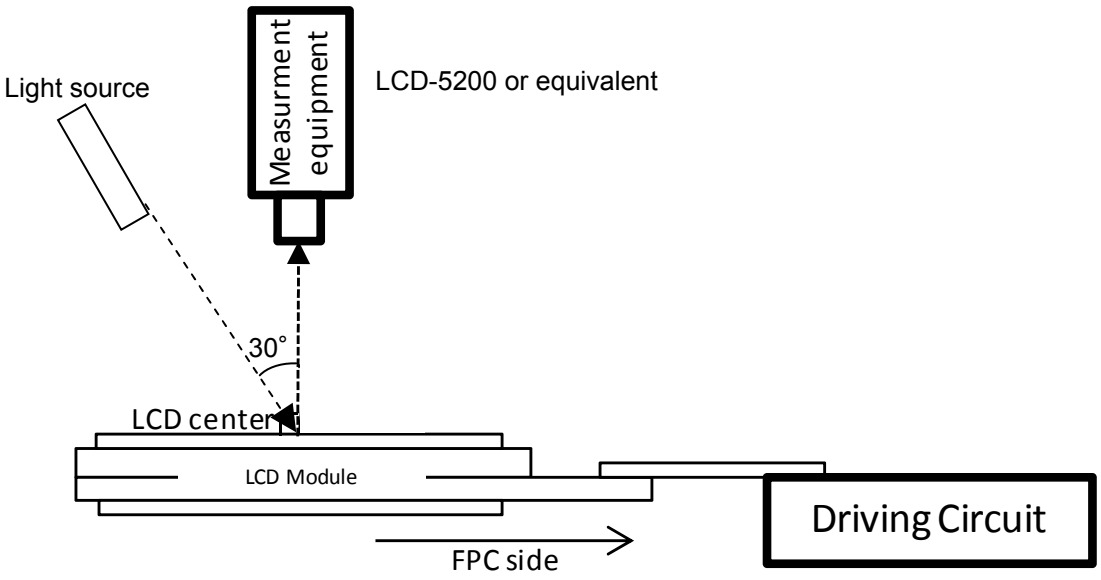

< Measurement system-Ⅱ for transmissive mode >

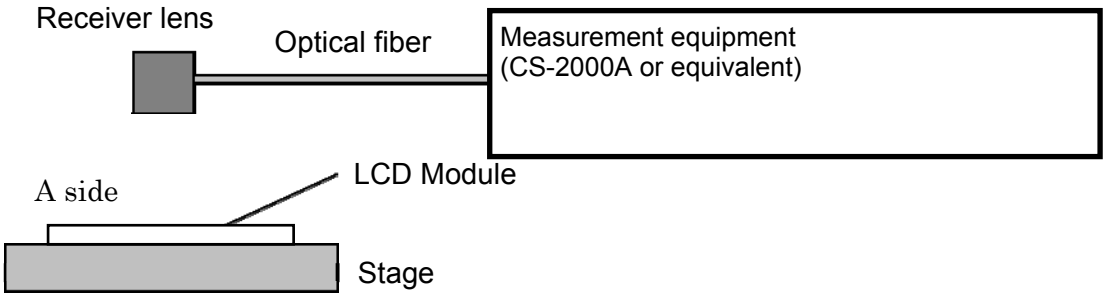

10. INSPECTION

Please refer to the shipment inspection standard Ver.01 for LPM044M141A.

11. RELIABILITY

11.1 CONDITIONS OF RELIABILITY AND MECHANICAL TEST

No.	TEST ITEM	CONDITION		REMARK
1	High Temperature Storage	Ta=80°C	240h	
2	Low Temperature Storage	Ta=-30°C	240h	
3	High Temperature & High Humidity Storage	Ta=60°C／90%RH (No condensation)	240h	
4	High Temperature & High Humidity Operation	Ta=40°C／90%RH (No condensation)	240h	
5	High Temperature Operation	Ta=70°C	240h	
6	Low Temperature Operation	Ta=-20°C	240h	
7	Thermal shock (non-operating)	Ta=-20°C to 70°C (30min each)	50cycles	
8	ESD	HBM IEC 61340-3-1, ESD STM5.1 V = ±1.0kV (Contact) R = 1.5kΩ, C = 100pF	1 time each terminal	
9	Shock	100G, 6ms, ±X,±Y,±Z	3 times Each direction	
10	Packing Vibration	Random Vibration	101min Direction:Z	
11	Packing Drop	Height 60cm, 1 corner 3 edges, 6 surfaces	1 time Each direction	

Note)

If a nonconformance is found, both parties will have a discussion to solve it.

11.2 CRITERIA FOR JUDGEMENT

After the above tests, return samples to the normal temperature and moisture environment in the thermostat chamber room over 30 minutes not to condense. Inspect samples kept for more than 1 hour after pulling them out of the thermostat chamber room.

(1) There shall be no abnormality in the functions (Ex. No display, abnormal display, line defects).

(2) There shall be no serious degradation (Ex. Brightness uniformity, reversible changes, optical changes. The degradation due to backlight or polarizer is ignored).

12. DESIGNATION OF LOT MARK

Lot mark is printed on the FPC of the LCD module.

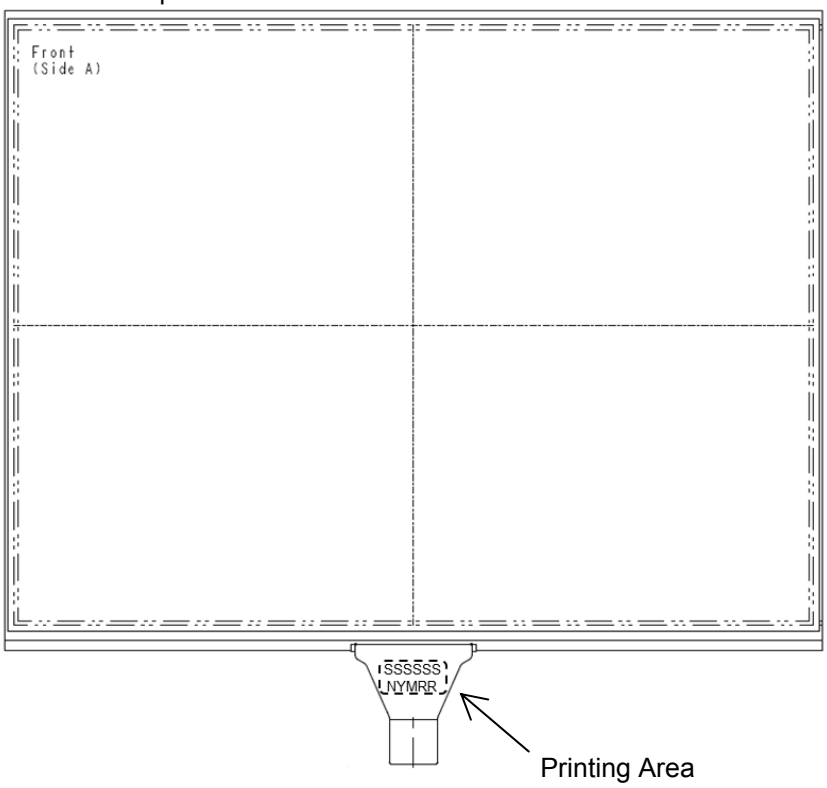

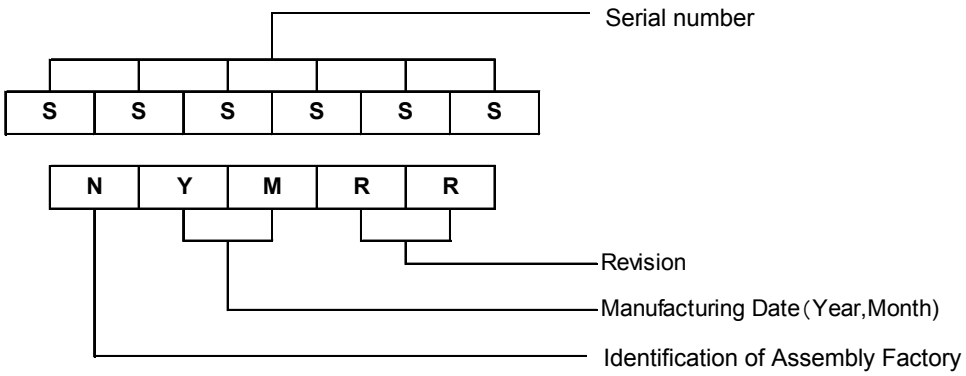

Year	Figure in lot mark
2017	7
2018	8
2019	9
2020	0
2021	1

Month	Figure in lot mark	Month	Figure in lot mark
Jan.	A	Jul.	G
Feb.	B	Aug.	H
Mar.	C	Sep.	I
Apr.	D	Oct.	J
May	E	Nov.	K
Jun.	F	Dec.	L

13. PACKING SPECIFICATIONS

13.1 INNER CARTON

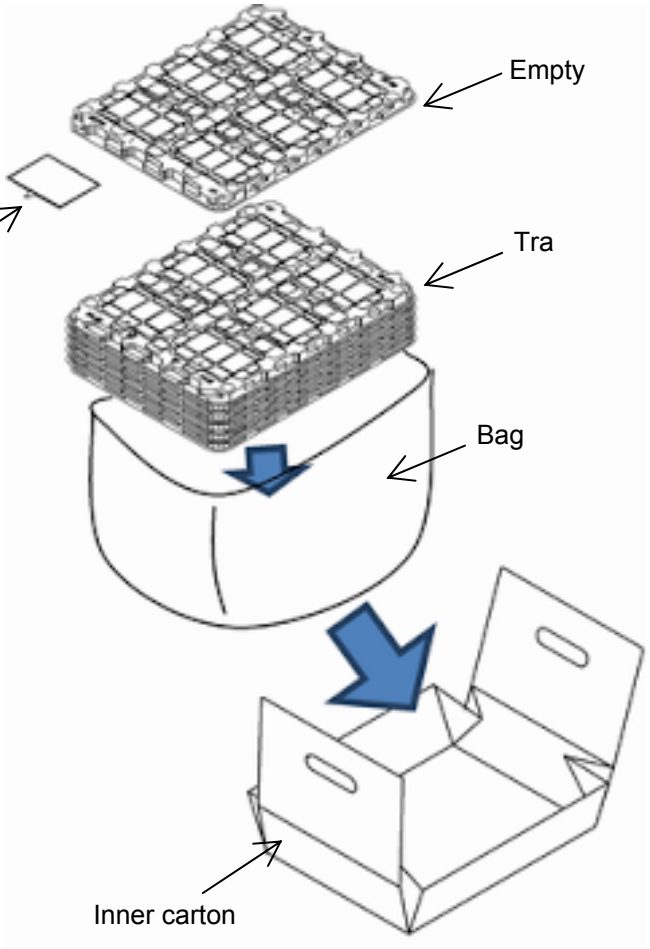

6pcs LCD modules per tray
10 trays with products + empty tray as cover
= 11 trays

Note)

Tray orientation must be alternately arranged.

If you do not stack trays alternately, it will lead to panel damaged.

13.2 MASTER CARTON

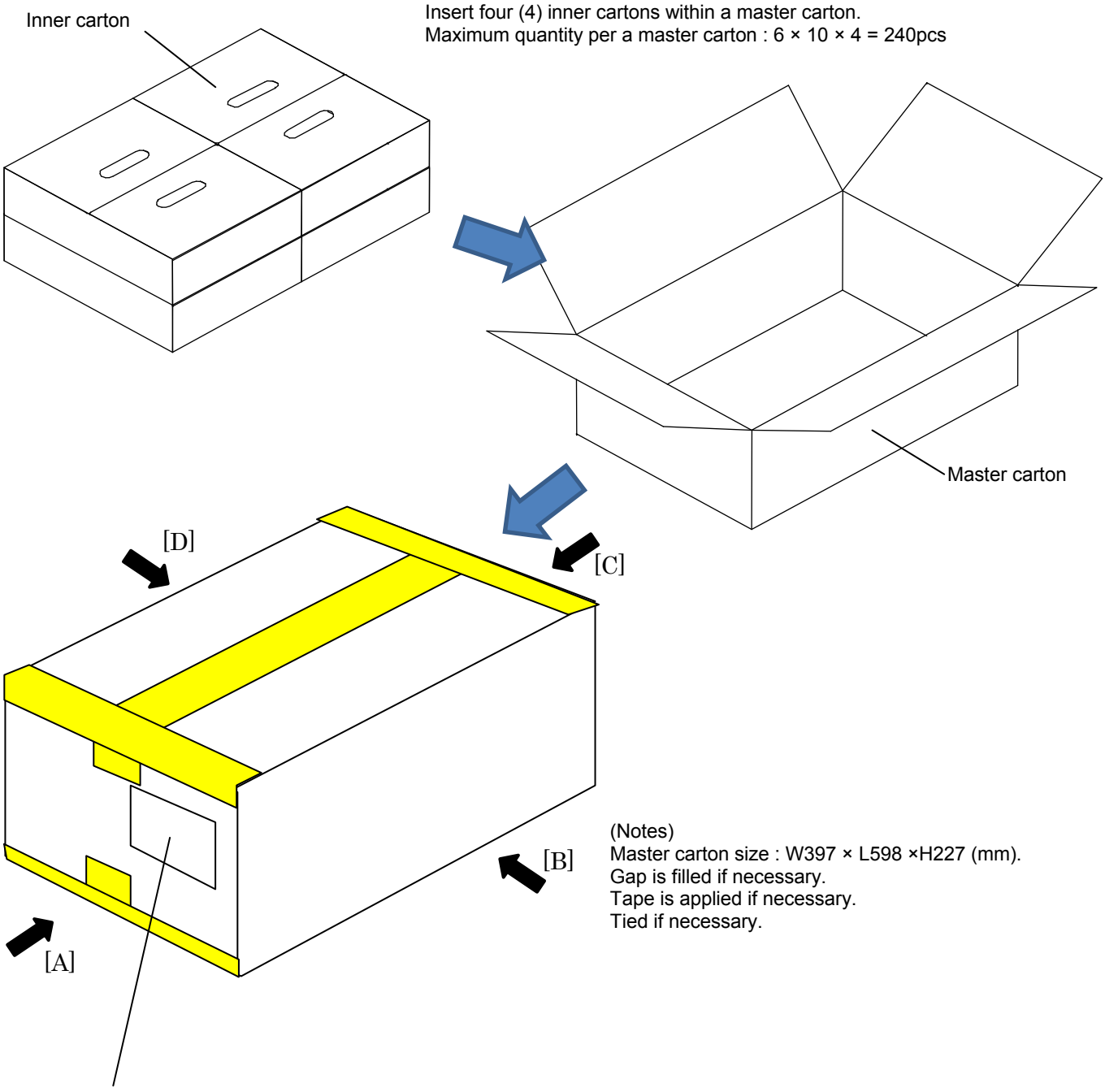

(Notes)
Master carton size : W397 × L598 ×H227 (mm).
Gap is filled if necessary.
Tape is applied if necessary.
Tied if necessary.

≪Outer label≫

Indication onto [A] [B] [C] [D] on master carton are shown as below

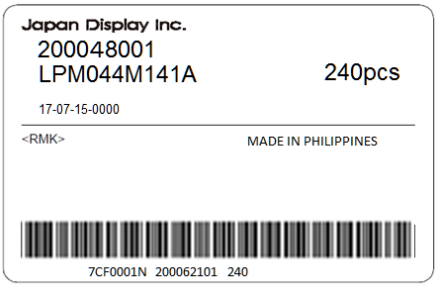

Outer label

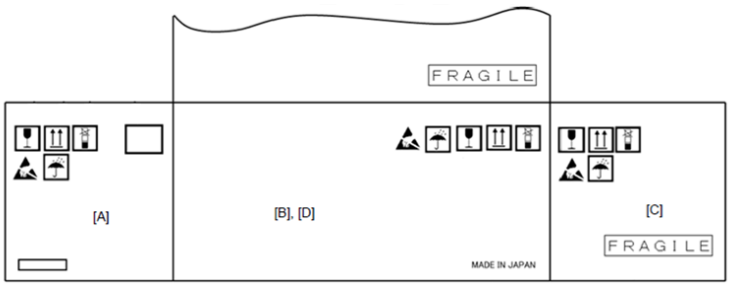

14. LCD MODULE USAGE AND PRECAUTIONS

14.1 HANDLING

(1) The display panel is made of glass. Do not subject it to mechanical shock such as dropping it from a high position, etc.
(2) If the display panel is damaged and internal liquid crystal substance leaks out, be sure not to inhale or consume it. If the internal liquid crystal substance comes into contact with skin or clothing, promptly wash it off using soap and running water.
(3) Do not apply excessive force on the surface, perimeter or adjoining areas of LCD module since this may cause display panel color tone to vary.
(4) The polarizer covering the display panel surface of the LCD module is soft and can be easily scratched. Handle this polarizer carefully.
(5) If the surface polarizer becomes contaminated, use the following recommended or equivalent adhesive tape for contaminants removal.
• Scotch-brand mending tape (No. 810)
(6) Do not breathe on the display surface or use Ethyl Alcohol solvent for contaminant removal as polarizer discoloration may occur. Furthermore, solvent other than mentioned above may also damage the polarizer. Especially, do not use the followings.
• Water
• Ketones
• Aromatic solvents
(7) When mounting the LCD Module, be sure that it is free from twisting, warping, or distortion. Any stress can have great influence to the display quality. Also, in cases where outer case or frame is included, be sure to secure sufficient stiffness on the outer case or frame for a robust design.
(8) Do not apply pressure at or around the FPC bonding area and the surrounding area.
(9) Do not attempt to disassemble or rework the LCD module.
(10) To prevent destruction of the elements by static electricity, be careful to maintain an optimum working environment.
• Be sure to ground your body before handling the LCD module.
• Make sure that solder guns and all other tools required for assembly have been grounded.
• To reduce occurrence of static electricity, avoid using this product in dry environments.
• A protective film has been attached to the surface of the LCD panel. When peeling off the protective film, be careful to prevent electrostatic discharges.
(11) To minimize performance degradation of the LCD module caused by destructive forces such as static electricity, etc., avoid direct contact to the following sections when handling the LCD module.
• terminal electrodes of connector
• wiring pattern on FPC
(12) LCD Panel surface is protected by a protective film layer. This protective film must be removed before final product installation. After removal of protective film layer, some adhesive residues maybe left on the LCD panel, especially after long storage period, please refer to section 5) listed above for proper contaminant removal procedure.
(13) Take precaution to minimize corrosion of electrodes. Corrosion of electrodes is accelerated by moisture, condensation or a current flow in a high-humidity environment.
(14) Do not apply excessive pressure to the FPC part. Force type such as twist, warp, etc., may damage FPC patterning traces.
(15) Do not use sharp, pointy or rigid tools when handing LCD panels. These objects can scratch or nick the glass panel which can cause it to crack.
(16) Do not touch or handle the LCD module directly with bare hands. Residue of dirt, oil or water may have the possibility to cause corrosion. Be sure to wear finger sacks or gloves when handling LCD modules. When holding an LCD panel module, carefully hold the panel by the edges of the glass plate.
(17) Avoid using LCD module under condensation or high humidity environment because polarizer etc. maybe damaged in these conditions.
(18) Trays are used to package LCD modules for shipment. If LCD modules scratch the tray during shipment, material of the scratched tray may be left on LCD modules. In such case, clean up LCD modules after removal from trays.
(19) When installing LCD module, don't apply excess stress of bending or stretching to the input cable
(20) Keep NC terminal open electrically.

(21) After storage under high humidity or condensation environment, keep LCD module under room temperature more than 30 minutes before operation.
(22) Take precautions to handling LCD module because the glass plate has very keen edges.

14.2 DESIGN OF APPLICATION

(1) The absolute maximum ratings represent the rated values which LCD module cannot exceed. When LCD modules are used beyond this rated value, the operating characteristics may be adversely affected.
(2) To prevent the occurrence of erroneous operation caused by noise, special attention on satisfying VIL, VIH specified values is required. This includes taking the precautionary measures of using short cables for signal transferring.
(3) An inherent characteristic of liquid crystal display is its temperature dependency. Be sure to use the LCD modules within the specified operating temperature range, as recognition of the display becomes difficult when the LCD module is used outside its range. Also, keep in mind that the voltage levels necessary for clear display images will vary according to temperature.
(4) It is recommended that power supply lines to include current surge protection. (Fuse etc. recommend value: 0.5A)
(5) Note the peripheral devices can cause mutual noise interference with LCD modules. Especially, input devices such as Touch Panel, etc., may output operational level by radiation noise even when these devices are not in operation. Actual performance confirmation and verification under actual usage environment by actual final product is highly recommended.
(6) To avoid EMI, preventive measures should be implemented in the final product.
(7) Display abnormality may occur with sudden removal of power supply such as device battery. Sudden removal of power supply shall be avoided at all time. LCD module quality cannot be guaranteed under such condition.
(8) Ensure sufficient light shading measures during design phase and when assemble the LCD module.
(9) Ensure sufficient light shading measures in the inspection process.
(10) Similar to general electronic components, ESD may cause LCD IC to malfunction. ESD preventive measures should be considered around the LCD module.
(11) While display data may be kept, data can be easily changed by external noise. Noise shall be minimized at device or system level.
(12) As unexpected noise may occur, periodic refresh operation such as resend the command and display data is highly recommended as part of the software routine.
(13) When logic circuit power is off, do not apply any signals to the input terminals.
(14) Do not use other components such as FPC or other features to fix the LCD module position, as pressure/tension may produce undesired result such as FPC trace crack.

14.3 DISPLAY CHARACTERISTICS

(1) Because the optimum LCD driving voltage depends on the ambient temperature, display may slightly flicker at the environment of high temperature.
(2) One of the special characteristics of liquid crystal is that it freezes when stored at the temperature below the storage temperature range. Such freezing may cause orientation defects or bubbles (black or white) to appear in the LCD panel. Bubbles may also occur if the panel receives an impact in a low-temperature environment.
(3) If the LCD module is left operating for a long time with the same display showing, the displayed pattern may leave traces on the screen or the contrast may become inconsistent.

14.4 KEEPING THE PRODUCTS

(1) When keeping LCD modules, avoid the following condition or environment.
• Exposure to direct sunlight or fluorescent lamps lightings.
• High-temperature/high-humidity or very low-temperature (below 0°C) environments.
• Exposure to water droplets, condensation, etc.
Furthermore, keep LCD modules in anti-static bags to prevent static electricity charge ups. Whenever possible, LCD modules should be stored in the same conditions in which they were shipped from Japan Display Inc.

(2) Take precaution to minimize corrosion of electrodes. Corrosion of electrodes is accelerated by moisture, condensation or a current flow in a high-humidity environment.
(3) Recommended keeping conditions.
• Keeping environment : +15°C to 35°C, less than 65%RH
• Duration: up to 2 months after shipping date
(4) The shipping carton must not be stacked up over 1.5m in height.

14.5 DISPOSAL

(1) When disposing LCD modules, consult company specialized in industrial waste treatment which is permitted by the government or local authority. When incineration is the method of LCD module disposal, law of environmental hygienic must be obeyed.

14.6 OTHERS

(1) This product is designed to be used in ordinary electronic devices. Do not use this product in other applications, especially in devices that may cause direct bodily damage to end users (such as weapons, military purposes, aerospace equipment, life-support system equipment, or safety equipment).
(2) Japan Display Inc. shall not be responsible for defects that occur in this product or in equipment connected to this product if the product is used in an environment that exceeds the ranges specified in this document, or in an environment not described in this document.

15. OUTLINE DRAWING

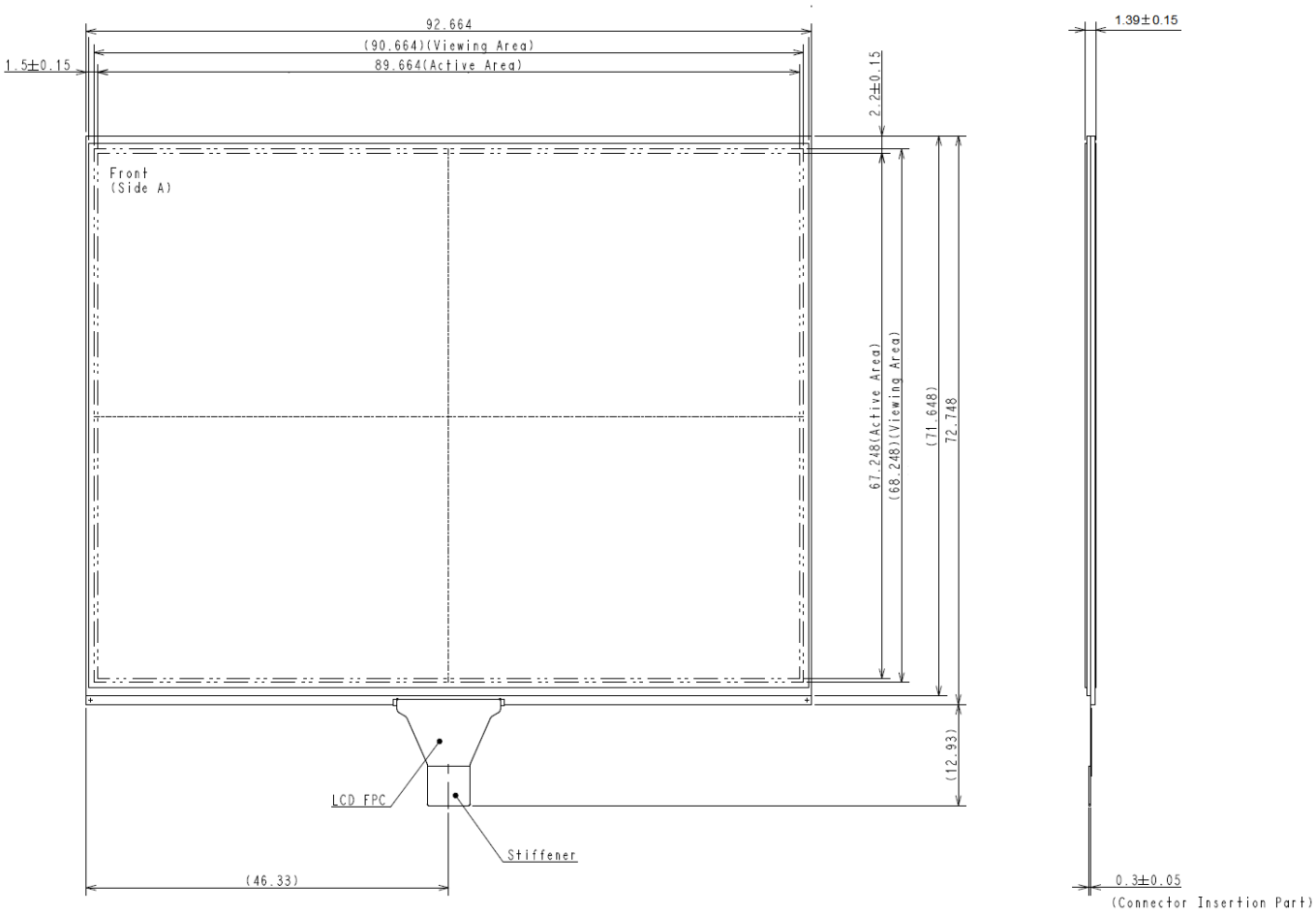

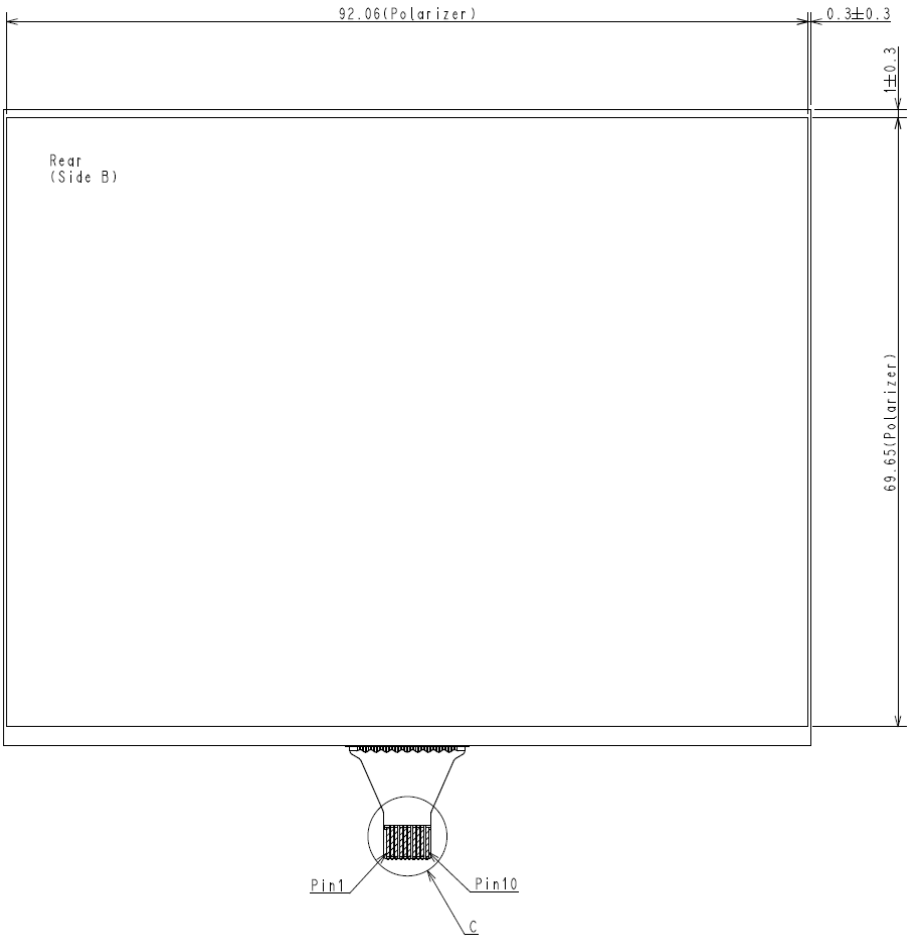

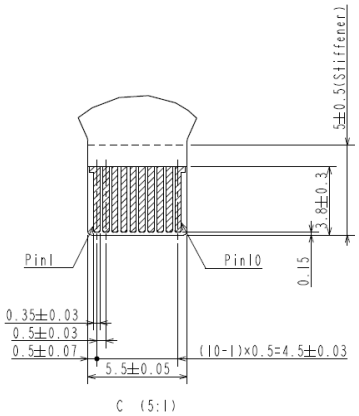

Note 1) Unit : mm

2) General tolerance: +/-0.2

3) Scale: NTS

4) Unless otherwise specified, radius shall be R0.5.

5) Example of suitable FPC connector : LCD-FPC FH28-10S-0.5SH(05) 10pin / Hirose.

6) There is conductive material in the end of the LCD glass. Do not contact side wall of the glass with conductive material.