LPF2015-C SERIES

SMD Shielded type

■ SHAPES & DIMENSIONS RECOMMENDED PCB PATTERN

(Dimensions in mm)

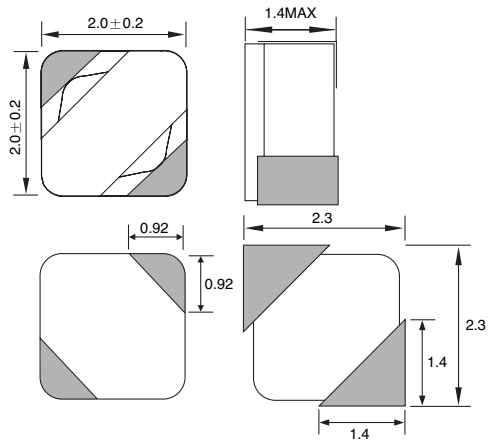

■ ELECTRICAL CHARACTERISTICS

Ordering Code	Inductance (μH)	Inductance TOL.(%)	DC Resistance (Ω)Max. ( )is typical value.	Rated Current [A] Max.
LPF2015T-1R5M-C	1.5	±20	0.15(0.12)	0.90
LPF2015T-2R2M-C	2.2		0.20(0.17)	0.75
LPF2015T-3R3M-C	3.3		0.28(0.24)	0.60
LPF2015T-4R7M-C	4.7		0.33(0.30)	0.50
LPF2015T-6R8M-C	6.8		0.50(0.46)	0.40
LPF2015T-100M-C	10.0		0.85(0.81)	0.30
LPF2015T-150M-C	15.0		1.05(1.00)	0.25

■ TEST EQUIPMENTS

- Inductance: Agilent 4284A LCR Meter (100KHz 0.5V)
- Rdc: HIOKI 3540 mΩ HiTESTER
- Bias Current: Agilent 4284A + Agilent 42841A
- Rate Current: △L ≤ 30% reduction from nominal L value or
  △T ≤ 40℃ typical at rated current whichever is lower

■ OPERATING TEMPERATURE RANGE

-30 ~ +85℃ (Including self-temp. rise)

LPF3010 SERIES

SMD Shielded type

■ SHAPES & DIMENSIONS RECOMMENDED PCB PATTERN

(Dimensions in mm)

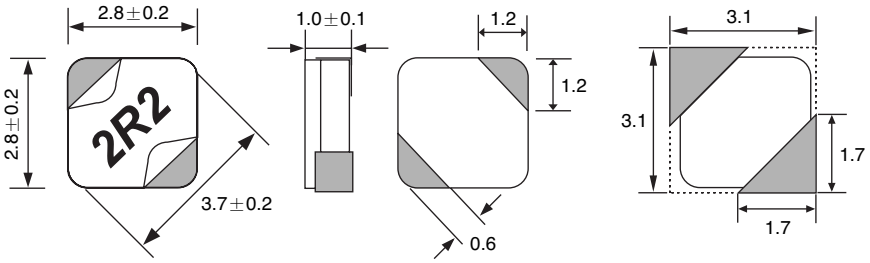

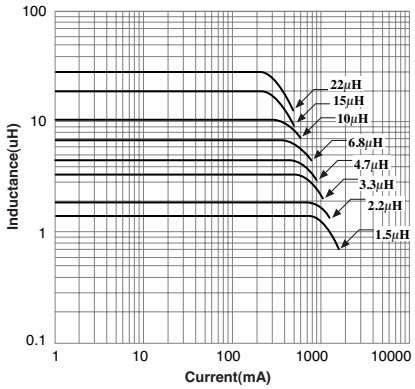

■ TEST EQUIPMENTS

- Inductance: Agilent 4284A LCR Meter (100KHz 0.5V)
- Rdc: HIOKI 3540 mΩ HiTESTER
- Bias Current: Agilent 4284A + Agilent 42841A
- IDC1(The saturation current):
  △L ≤ -35% reduction from nominal L value
- IDC2(The temperature rise):
  △T = 40℃ typical at rated current

■ OPERATING TEMPERATURE RANGE

-30 ~ +85℃ (Including self-temp. rise)

■ ELECTRICAL CHARACTERISTICS

Ordering Code	Inductance (μH)	Inductance TOL.(%)	Test Freq. (KHz)	DC Resistance (Ω)Max. ( )is typical value.	Rated Current[A]		Marking
					IDC1 (Max.)	IDC2 (Typ.)	
LPF3010T-1R5N	1.5	±30	100	0.097(0.082)	1.20	1.90	1R5
LPF3010T-2R2N	2.2	±20		0.110(0.098)	1.00	1.20	2R2
LPF3010T-3R3N	3.3			0.200(0.180)	0.87	1.10	3R3
LPF3010T-4R7N	4.7			0.280(0.260)	0.70	1.00	4R7
LPF3010T-6R8N	6.8			0.340(0.320)	0.61	0.83	6R8
LPF3010T-100N	10.0			0.580(0.530)	0.45	0.56	100
LPF3010T-150N	15.0			0.860(0.790)	0.40	0.46	150
LPF3010T-220N	22.0			1.130(1.030)	0.33	0.41	220