# SMD TYPE

## LPF2010 SERIES

SMD Shielded type

### ■ SHAPES & DIMENSIONS
### RECOMMENDED PCB PATTERN

(Dimensions in mm)

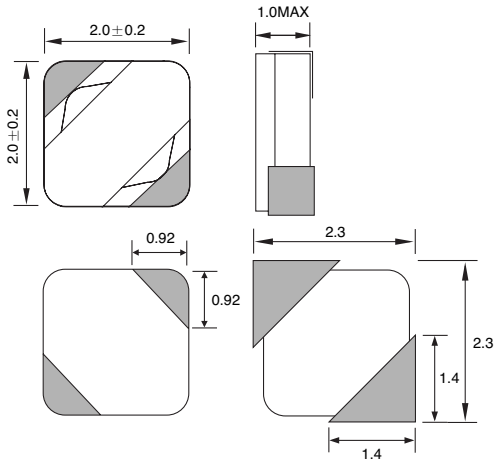


### ■ ELECTRICAL CHARACTERISTICS

| Ordering Code | Inductance (μH) | Inductance TOL.(%) | DC Resistance (Ω)Max. ( )is typical value. | Rated Current [A] Max. |
|---|---|---|---|---|
| LPF2010T-1R5M | 1.5 | ±20 | 0.22(0.18) | 0.62 |
| LPF2010T-2R2M | 2.2 | | 0.25(0.20) | 0.52 |
| LPF2010T-3R3M | 3.3 | | 0.40(0.35) | 0.45 |
| LPF2010T-4R7M | 4.7 | | 0.45(0.40) | 0.35 |
| LPF2010T-6R8M | 6.8 | | 0.70(0.67) | 0.30 |
| LPF2010T-100M | 10.0 | | 0.88(0.83) | 0.22 |

### ■ TEST EQUIPMENTS

- Inductance: Agilent 4284A LCR Meter (100KHz 0.5V)
- Rdc: HIOKI 3540 mΩ HiTESTER
- Bias Current: Agilent 4284A + Agilent 42841A
- Rate Current: △L ≤ 30% reduction from nominal L value or
  △T ≤ 40℃ typical at rated current whichever is lower

### ■ OPERATING TEMPERATURE RANGE

-30 ~ +85℃ (Including self-temp. rise)

## LPF2015 SERIES

SMD Shielded type

### ■ SHAPES & DIMENSIONS
### RECOMMENDED PCB PATTERN

(Dimensions in mm)

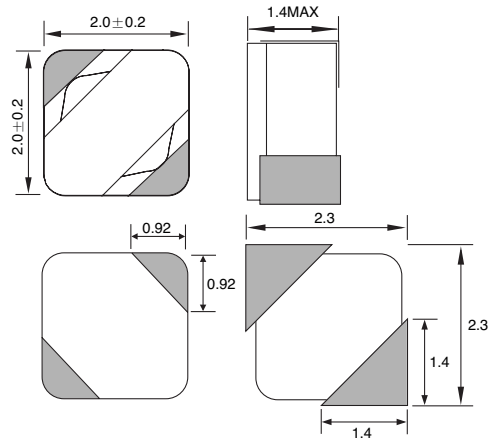


### ■ ELECTRICAL CHARACTERISTICS

| Ordering Code | Inductance (μH) | Inductance TOL.(%) | DC Resistance (Ω)Max. ( )is typical value. | Rated Current [A] Max. |
|---|---|---|---|---|
| LPF2015T-1R5M | 1.5 | ±20 | 0.11(0.09) | 0.75 |
| LPF2015T-2R2M | 2.2 | | 0.13(0.11) | 0.55 |
| LPF2015T-3R3M | 3.3 | | 0.20(0.18) | 0.48 |
| LPF2015T-4R7M | 4.7 | | 0.23(0.20) | 0.40 |
| LPF2015T-6R8M | 6.8 | | 0.35(0.32) | 0.30 |
| LPF2015T-100M | 10.0 | | 0.52(0.48) | 0.25 |
| LPF2015T-150M | 15.0 | | 0.85(0.80) | 0.18 |
| LPF2015T-220M | 22.0 | | 1.05(1.00) | 0.15 |

### ■ TEST EQUIPMENTS

- Inductance: Agilent 4284A LCR Meter (100KHz 0.5V)
- Rdc: HIOKI 3540 mΩ HiTESTER
- Bias Current: Agilent 4284A + Agilent 42841A
- Rate Current: △L ≤ 30% reduction from nominal L value or
  △T ≤ 40℃ typical at rated current whichever is lower

### ■ OPERATING TEMPERATURE RANGE

-30 ~ +85℃ (Including self-temp. rise)


Specifications given herein may be changed at any time without prior notice. Please confirm technical specifications before your order and/or use.