40W Single Output Switching Power Supply — LPF-40D series



Features :

- Universal AC input / Full range (up to 305VAC)
- Built-in active PFC function
- High efficiency up to 89%
- Protections: Short circuit / Over current / Over voltage / Over temperature
- Cooling by free air convection
- Fully isolated plastic case
- Fully encapsulated with IP67 level (Note.6)
- Class Ⅱ power unit, no FG
- Class 2 power unit
- Built-in 3 in 1 dimming function (1~10Vdc or PWM signal or resistance)
- Suitable for LED lighting and moving sign applications
- Compliance to worldwide safety regulations for lighting
- Suitable for dry / damp / wet locations
- 3 years warranty

TAIWAN EXCELLENCE 2012

SELV IP67 (for 48V,54V only) (except for 48V,54V)

SPECIFICATION

MODEL		LPF-40D-12	LPF-40D-15	LPF-40D-20	LPF-40D-24	LPF-40D-30	LPF-40D-36	LPF-40D-42	LPF-40D-48	LPF-40D-54
OUTPUT	DC VOLTAGE	12V	15V	20V	24V	30V	36V	42V	48V	54V
	CONSTANT CURRENT REGION Note.4	7.2 ~12V	9 ~ 15V	12 ~ 20V	14.4 ~ 24V	18 ~ 30V	21.6 ~ 36V	25.2 ~ 42V	28.8 ~ 48V	32.4 ~ 54V
	RATED CURRENT	3.34A	2.67A	2A	1.67A	1.34A	1.12A	0.96A	0.84A	0.76A
	RATED POWER	40.08W	40.08W	40W	40.08W	40.2W	40.32W	40.32W	40.32W	41.04W
	RIPPLE & NOISE (max.) Note.2	150mVp-p	150mVp-p	150mVp-p	150mVp-p	200mVp-p	250mVp-p	250mVp-p	250mVp-p	350mVp-p
	VOLTAGE TOLERANCE Note.3	±4.0%	±4.0%	±4.0%	±4.0%	±4.0%	±4.0%	±4.0%	±4.0%	±4.0%
	LINE REGULATION	±0.5%	±0.5%	±0.5%	±0.5%	±0.5%	±0.5%	±0.5%	±0.5%	±0.5%
	LOAD REGULATION	±2.0%	±1.5%	±1.0%	±0.5%	±0.5%	±0.5%	±0.5%	±0.5%	±0.5%
	SETUP, RISE TIME Note.7	1000ms, 80ms / 115VAC at full load 1000ms, 80ms / 230VAC								
	HOLD UP TIME (Typ.)	16ms/230VAC 16ms/115VAC at full load								
INPUT	VOLTAGE RANGE Note.5	90 ~ 305VAC 127 ~ 431VDC								
	FREQUENCY RANGE	47 ~ 63Hz								
	POWER FACTOR (Typ.)	PF>0.97/115VAC, PF>0.95/230VAC, PF>0.92/277VAC at full load (Please refer to "Power Factor Characteristic" curve)								
	EFFICIENCY (Typ.)	84%	85%	86%	87%	88%	88%	88.5%	89%	89%
	AC CURRENT (Typ.)	0.6A / 115VAC 0.3A / 230VAC								
	INRUSH CURRENT (Typ.)	COLD START 75A/230VAC								
	LEAKAGE CURRENT	<0.75mA / 240VAC								
PROTECTION	OVER CURRENT Note.4	95 ~ 108%								
		Protection type : Constant current limiting, recovers automatically after fault condition is removed								
	SHORT CIRCUIT	Hiccup mode, recovers automatically after fault condition is removed.								
	OVER VOLTAGE	15 ~ 17V	17.5 ~ 21V	23 ~ 27V	28 ~ 35V	34 ~ 40V	41 ~ 49V	46 ~ 54V	54 ~ 63V	59 ~ 66V
		Protection type : Shut down and latch off o/p voltage, re-power on to recover								
	OVER TEMPERATURE	90℃ ±10℃ (RTH2)								
		Protection type : Shut down o/p voltage, re-power on to recover								
ENVIRONMENT	WORKING TEMP.	-40 ~ +70℃ (Refer to "Derating Curve")								
	WORKING HUMIDITY	20 ~ 95% RH non-condensing								
	STORAGE TEMP., HUMIDITY	-40 ~ +80℃, 10 ~ 95% RH								
	TEMP. COEFFICIENT	±0.03%/℃ (0 ~ 50℃)								
	VIBRATION	10 ~ 500Hz, 5G 12min./1cycle, period for 72min. each along X, Y, Z axes								
SAFETY & EMC	SAFETY STANDARDS Note.6	UL8750, CSA C22.2 No. 250.0-08(except for 48V, 54V), EN61347-1, EN61347-2-13 independent, IP67, J61347-1, J61347-2-13 approved ; design refer to UL60950-1, TUV EN60950-1								
	WITHSTAND VOLTAGE	I/P-O/P:3.75KVAC								
	ISOLATION RESISTANCE	I/P-O/P:100M Ohms / 500VDC / 25℃/ 70% RH								
	EMC EMISSION	Compliance to EN55015, EN61000-3-2 Class C (≧60% load) ; EN61000-3-3								
	EMC IMMUNITY	Compliance to EN61000-4-2,3,4,5,6,8,11; EN61547, EN55024, light industry level(surge 2KV), criteria A								
OTHERS	MTBF	394.9Khrs min. MIL-HDBK-217F (25℃)								
	DIMENSION	162.5*43*32mm (L*W*H)								
	PACKING	0.45Kg; 32pcs/15.4Kg/0.93CUFT								

NOTE

1. All parameters NOT specially mentioned are measured at 230VAC input, rated load and 25℃ of ambient temperature.
2. Ripple & noise are measured at 20MHz of bandwidth by using a 12" twisted pair-wire terminated with a 0.1uf & 47uf parallel capacitor.
3. Tolerance : includes set up tolerance, line regulation and load regulation.
4. Constant current operation region is within 60% ~100% rated output voltage. This is the suitable operation region for LED related applications, but please reconfirm special electrical requirements for some specific system design.
5. Derating may be needed under low input voltages. Please check the static characteristics for more details.
6. Suitable for indoor use or outdoor use without direct sunlight exposure. Please avoid immerse in the water over 30 minutes.
7. Length of set up time is measured at cold first start. Turning ON/OFF the power supply may lead to increase of the set up time.
8. The power supply is considered as a component that will be operated in combination with final equipment. Since EMC performance will be affected by the complete installation, the final equipment manufacturers must re-qualify EMC Directive on the complete installation again.

■ Mechanical Specification

Case No.LPF-60B Unit:mm

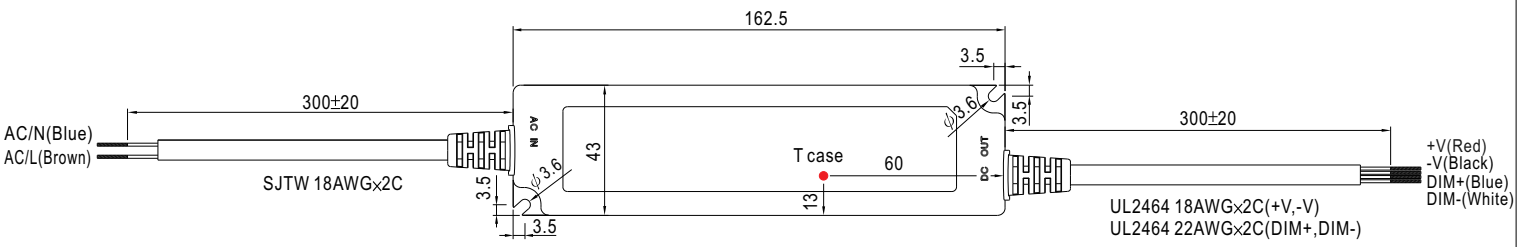

※ T case: Max. Case Temperature.



■ Block Diagram

Fosc : 100KHz

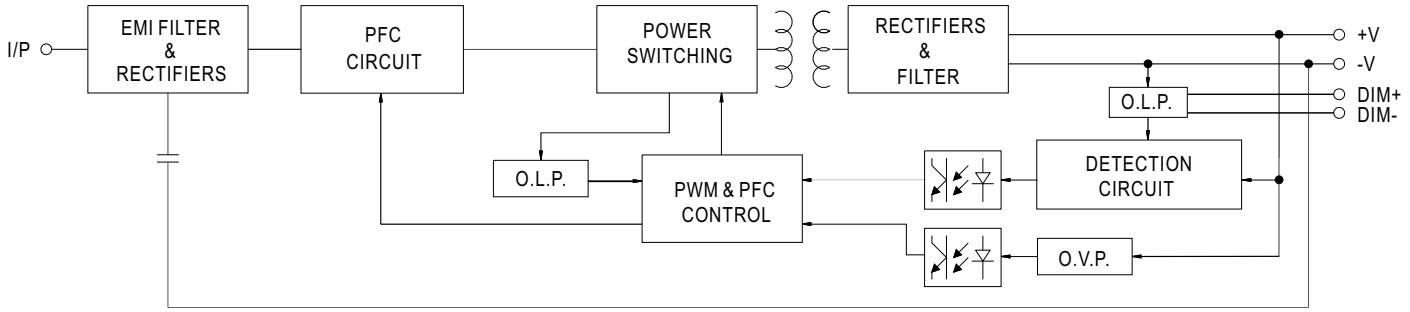

■ Derating Curve

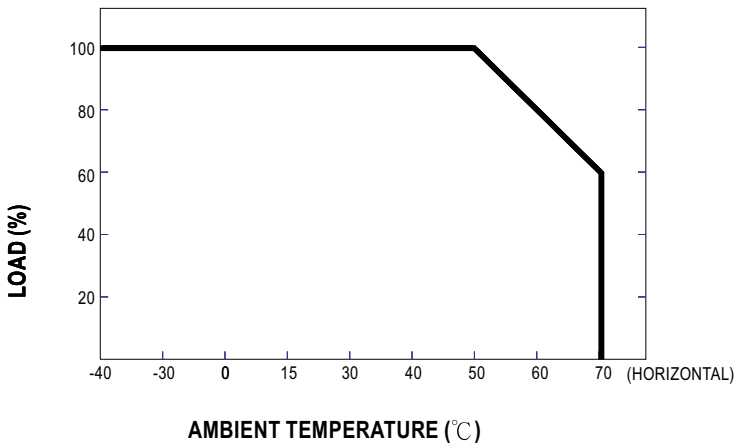

■ Static Characteristics

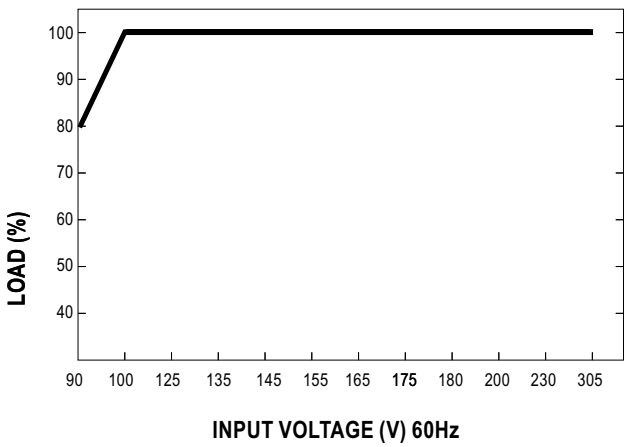

■ Power Factor Characteristic

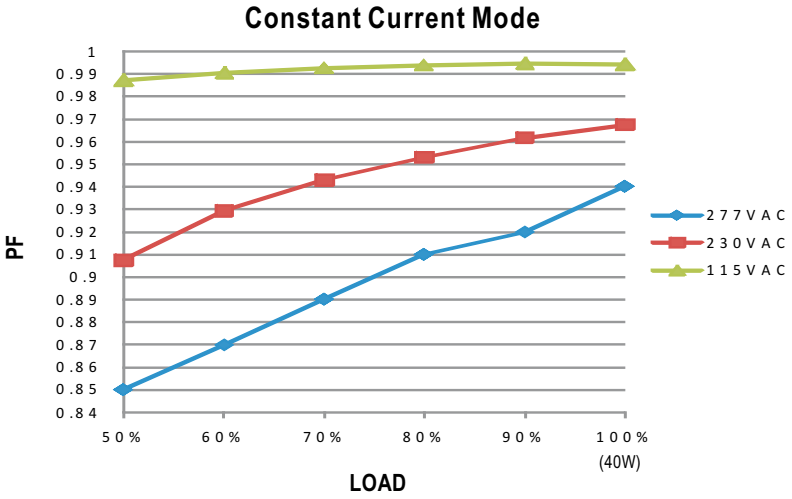

■ EFFICIENCY vs LOAD (48V Model)

LPF-40D series possess superior working efficiency that up to 89% can be reached in field applications.

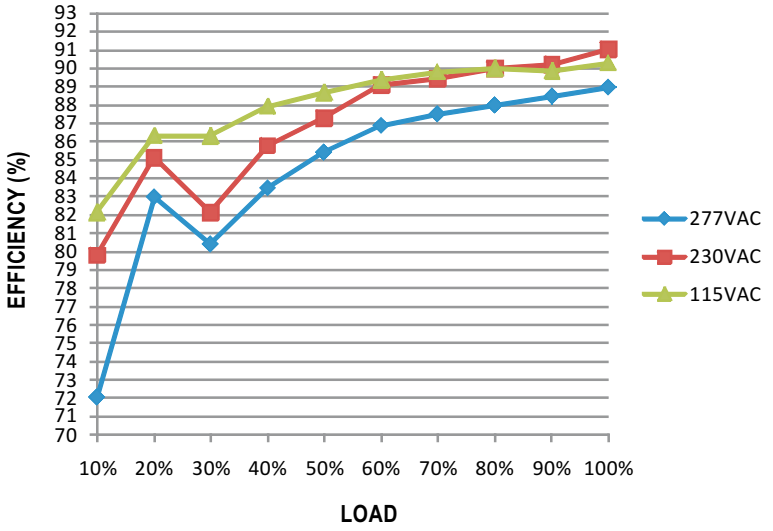

■ DRIVING METHODS OF LED MODULE

There are two major kinds of LED drive method "direct drive" and "with LED driver".
A typical LED power supply may either work in "constant voltage mode (CV) or constant current mode (CC)" to drive the LEDs.
Mean Well's LED power supply with CV+ CC characteristic can be operated at both CV mode (with LED driver, at area (A) and CC mode (direct drive, at area (B).

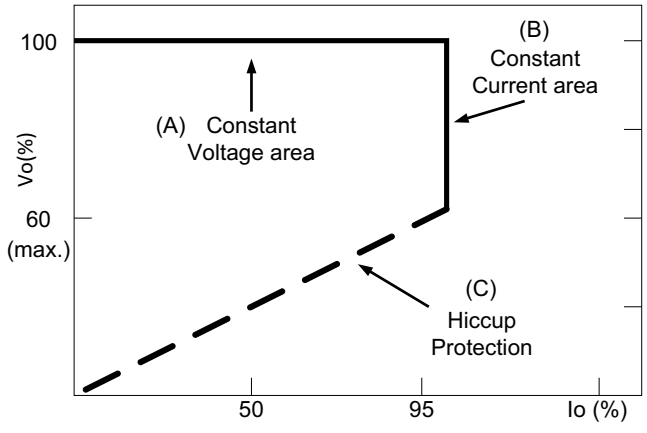

Typical LED power supply I-V curve

■ DIMMING OPERATION

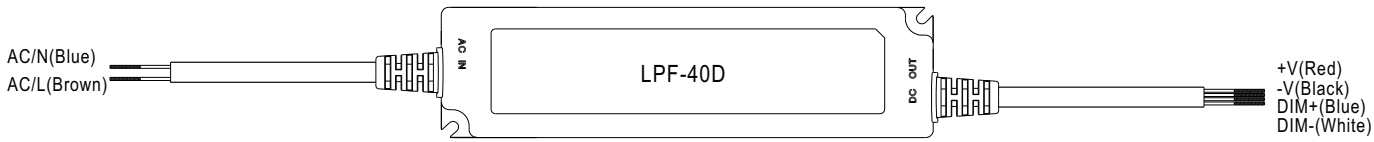

※ Built-in 3 in 1 dimming function, output constant current level can be adjusted through output cable by 1 ~ 10Vdc, 10V PWM signal or resistance between DIM+ and DIM-.

※ Please DO NOT connect "DIM-" to "-V".

※ Reference resistance value for output current adjustment (Typical)

Resistance value	10KΩ	20KΩ	30KΩ	40KΩ	50KΩ	60KΩ	70KΩ	80KΩ	90KΩ	100KΩ	OPEN
Output current	10%	20%	30%	40%	50%	60%	70%	80%	90%	100%	100%~108%

※ 1 ~ 10V dimming function for output current adjustment (Typical)

Dimming value	1V	2V	3V	4V	5V	6V	7V	8V	9V	10V	OPEN
Output current	10%	20%	30%	40%	50%	60%	70%	80%	90%	100%	100%~108%

※ 10V PWM signal for output current adjustment (Typical): Frequency range :100Hz ~ 3KHz

Duty value	10%	20%	30%	40%	50%	60%	70%	80%	90%	100%	OPEN
Output current	10%	20%	30%	40%	50%	60%	70%	80%	90%	100%	100%~108%

※Using the built-in dimming function on LPF-40D can't turn the lighting fixture totally dark. Please refer to the connection method below to achieve 0% brightness of the lighting fixture connecting to the LED power supply unit.

Dimming connection diagram for turning the lighting fixture ON/OFF :

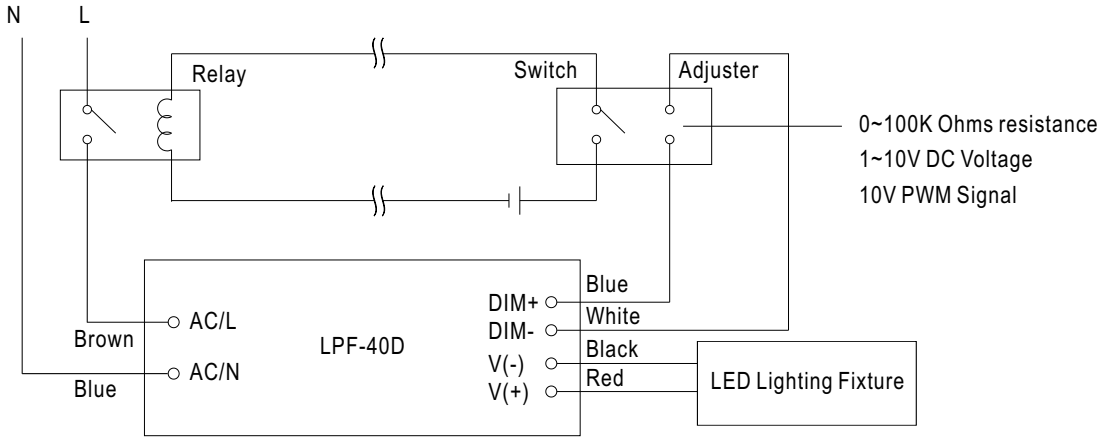

Using a switch and relay can turn ON/OFF the lighting fixture.

1.Output constant current level can be adjusted through output cable by connecting a resistor or 1~10Vdc or 10V PWM signal between DIM+ and DIM-.

2.The LED lighting fixture can be turned ON/OFF by the switch.