LPC1102/1104

32-bit ARM Cortex-M0 microcontroller; 32 kB flash and 8 kB SRAM

Rev. 7 — 26 September 2013 Product data sheet

1. General description

The LPC1102/1104 are an ARM Cortex-M0 based, low-cost 32-bit MCU, designed for 8/16-bit microcontroller applications, offering performance, low power, simple instruction set and memory addressing together with reduced code size compared to existing 8/16-bit architectures.

The LPC1102/1104 operate at CPU frequencies of up to 50 MHz.

The peripheral complement of the LPC1102/1104 includes 32 kB of flash memory, 8 kB of data memory, one RS-485/EIA-485 UART, one SPI interface with SSP features, four general purpose counter/timers, a 10-bit ADC, and 11 general purpose I/O pins.

Remark: The LPC1104 has a revised pinout and contains several features not found in the LPC1102:

- Two extra GPIO pins (PIO0_1 and PIO0_6).
- Extra match output (CT32B0_MAT2).
- CLKOUT feature.
- Easier re-entry to ISP via PIO0_1.
- SSP0_CLK available on two pins (A1 and A2) to support debugging of SSP communication.
- Better positioning of the XTALIN pin for easier PCB layout.

2. Features and benefits

- System:
  - ARM Cortex-M0 processor, running at frequencies of up to 50 MHz.
  - ARM Cortex-M0 built-in Nested Vectored Interrupt Controller (NVIC).
  - Serial Wire Debug.
  - System tick timer.
- Memory:
  - 32 kB on-chip flash programming memory.
  - 8 kB SRAM.
  - In-Application Programming (IAP) and In-System Programming (ISP) support via on-chip bootloader software.
- Digital peripherals:
  - 11 General Purpose I/O (GPIO) pins with configurable pull-up/pull-down resistors and programmable open-drain mode.

- GPIO pins can be used as edge and level sensitive interrupt sources.
- Four general purpose counter/timers with a total of one capture input and 10 match outputs.
- Programmable windowed WatchDog Timer (WDT).

- Analog peripherals:
  - 10-bit ADC with input multiplexing among five pins.
- Serial interfaces:
  - UART with fractional baud rate generation, internal FIFO, and RS-485 support.
  - One SPI controller with SSP features and with FIFO and multi-protocol capabilities (see Section 7.16).
- Clock generation:
  - 12 MHz internal RC oscillator trimmed to 1 % accuracy that can optionally be used as a system clock.
  - Programmable watchdog oscillator with a frequency range of 9.4 kHz to 2.3 MHz.
  - PLL allows CPU operation up to the maximum CPU rate without the need for a high-frequency crystal. May be run from an external clock or the internal RC oscillator.
  - Clock output function with divider that can reflect the system oscillator clock, IRC clock, CPU clock, and the Watchdog clock (LPC1104 only).
- Power control:
  - Integrated PMU (Power Management Unit) to minimize power consumption during Sleep and Deep-sleep modes.
  - Power profiles residing in boot ROM allowing to optimize performance and minimize power consumption for any given application through one simple function call.
  - Two reduced power modes: Sleep and Deep-sleep modes.
  - Processor wake-up from Deep-sleep mode via a dedicated start logic using up to six of the functional pins.
  - Power-On Reset (POR).
  - Brownout detect with up to four separate thresholds for interrupt and forced reset.
- Unique device serial number for identification.
- Single 3.3 V power supply (1.8 V to 3.6 V).
- Available as WLCSP16 package.

3. Applications

- Mobile devices
- Consumer peripherals
- Lighting
- 8-/16-bit applications
- Portable devices

All information provided in this document is subject to legal disclaimers.

© NXP B.V. 2013. All rights reserved.

4. Ordering information

Table 1. Ordering information

Type number	Package		
	Name	Description	Version
LPC1102UK	WLCSP16	wafer level chip-size package; 16 bumps; 2.17 × 2.32 × 0.6 mm	-
LPC1104UK	WLCSP16	wafer level chip-size package; 16 bumps; 2.17 × 2.32 × 0.6 mm	-

4.1 Ordering options

Table 2. Ordering options

Type number	Flash	Total SRAM	UART RS-485	SPI	ADC channels	Package
LPC1102UK	32 kB	8 kB	1	1	5	WLCSP16
LPC1104UK	32 kB	8 kB	1	1	5	WLCSP16

All information provided in this document is subject to legal disclaimers.

© NXP B.V. 2013. All rights reserved.

5. Block diagram

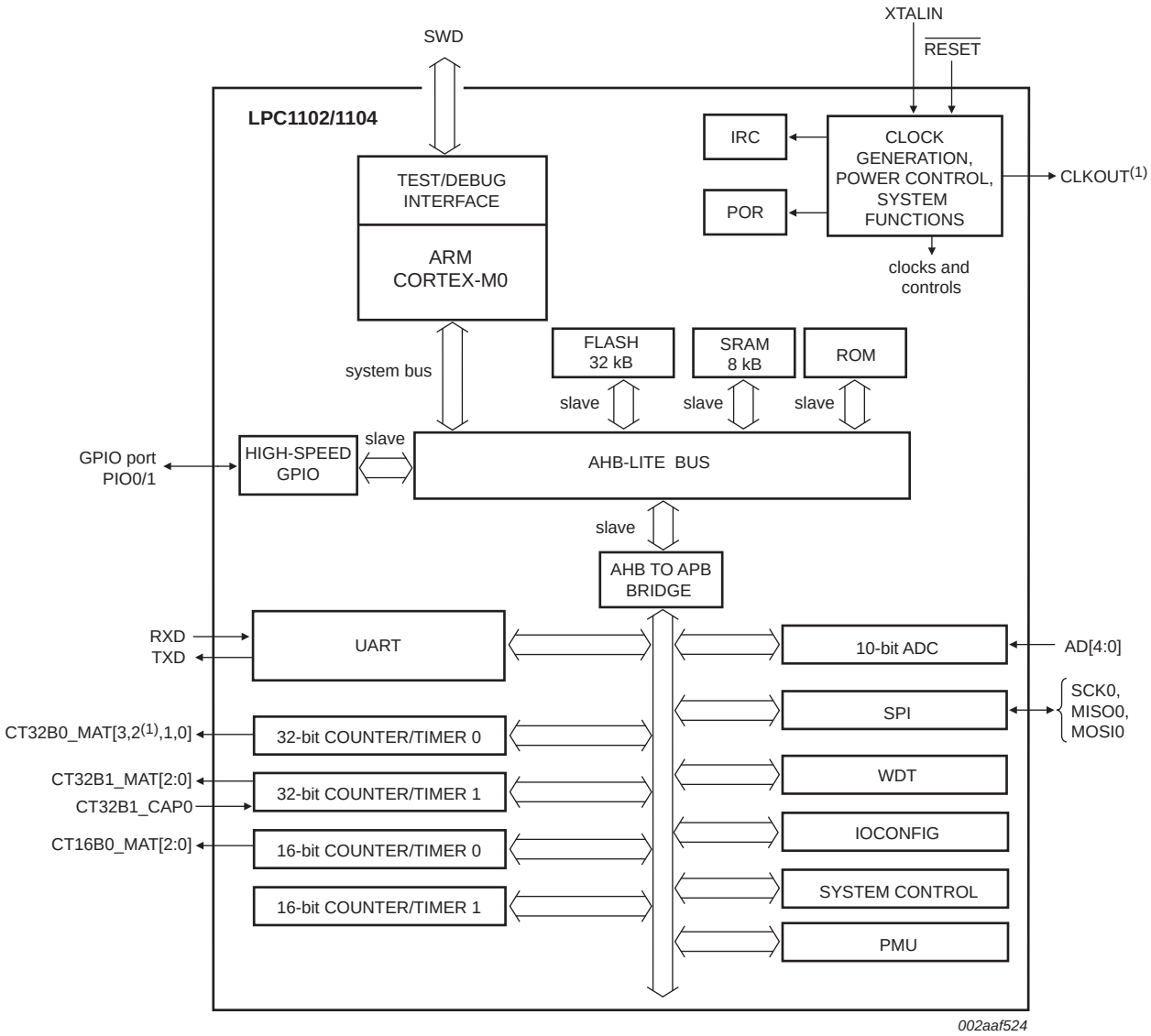

(1) LPC1104 only.

(2) CT32B0_MAT2 LPC1104 only.

Fig 1. LPC1102/1104 block diagram

All information provided in this document is subject to legal disclaimers.

© NXP B.V. 2013. All rights reserved.

6. Pinning information

6.1 Pinning

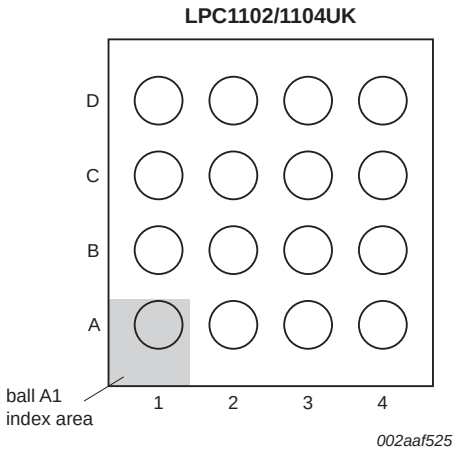

Fig 2. Pin configuration WLCSP16 package

All information provided in this document is subject to legal disclaimers.

© NXP B.V. 2013. All rights reserved.

6.2 Pin description

Table 3. LPC1102/1104 pin description table

Symbol	LPC1102	LPC1104	Start logic input	Type	Reset state[1]	Description
$\overline{\text{RESET}}$/PIO0_0	C1[2]	B2[2]	yes	I	I; PU	**$\overline{\text{RESET}}$ —** External reset input with 20 ns glitch filter. A LOW -going pulse as short as 50 ns on this pin resets the device, causing I/O ports and peripherals to take on their default states, and processor execution to begin at address 0.
				I/O	-	**PIO0_0 —** General purpose digital input/output pin.
PIO0_1/CLKOUT/ CT32B0_MAT2	-	C1[3]	yes	I/O	I; PU	**PIO0_1 —** General purpose digital input/output pin. A LOW level on this pin during reset starts the ISP command handler.
				O	-	**CLKOUT —** Clockout pin.
				O	-	**CT32B0_MAT2 —** Match output 2 for 32-bit timer 0.
PIO0_6/SCK0	-	A1[3]	yes	I/O	I;PU	**PIO0_6 —** General purpose digital input/output pin.
				I/O	-	**SCK0 —** Serial clock for SPI0.
PIO0_8/MISO/ CT16B0_MAT0	A2[3]	A3[3]	yes	I/O	I; PU	**PIO0_8 —** General purpose digital input/output pin.
				I/O	-	**MISO0 —** Master In Slave Out for SPI.
				O	-	**CT16B0_MAT0 —** Match output 0 for 16-bit timer 0.
PIO0_9/MOSI/ CT16B0_MAT1	A3[3]	A4[3]	yes	I/O	I; PU	**PIO0_9 —** General purpose digital input/output pin.
				I/O	-	**MOSI0 —** Master Out Slave In for SPI.
				O	-	**CT16B0_MAT1 —** Match output 1 for 16-bit timer 0.
SWCLK/ PIO0_10/ SCK0/CT16B0_MAT2	A4[3]	A2[3]	yes	I	I; PU	**SWCLK —** Serial wire clock.
				I/O	-	**PIO0_10 —** General purpose digital input/output pin.
				I/O	-	**SCK0 —** Serial clock for SPI0.
				O	-	**CT16B0_MAT2 —** Match output 2 for 16-bit timer 0.
R/PIO0_11/ AD0/CT32B0_MAT3	B4[4]	B4[4]	yes	-	I; PU	**R —** Reserved.
				I/O	-	**PIO0_11 —** General purpose digital input/output pin.
				I	-	**AD0 —** A/D converter, input 0.
				I	-	**CT32B0_MAT3 —** Match output 3 for 32-bit timer 0.
R/PIO1_0/ AD1/CT32B1_CAP0	B3[4]	B3[4]	yes	-	I; PU	**R —** Reserved.
				I/O	-	**PIO1_0 —** General purpose digital input/output pin.
				I	-	**AD1 —** A/D converter, input 1.
				I	-	**CT32B1_CAP0 —** Capture input 0 for 32-bit timer 1.
R/PIO1_1/ AD2/CT32B1_MAT0	C4[4]	C4[4]	no	-	I; PU	**R —** Reserved.
				I/O	-	**PIO1_1 —** General purpose digital input/output pin.
				I	-	**AD2 —** A/D converter, input 2.
				O	-	**CT32B1_MAT0 —** Match output 0 for 32-bit timer 1.

All information provided in this document is subject to legal disclaimers.

© NXP B.V. 2013. All rights reserved.

Table 3. LPC1102/1104 pin description table *...continued*

Symbol	LPC1102	LPC1104	Start logic input	Type	Reset state[1]	Description
R/PIO1_2/ AD3/CT32B1_MAT1	C3[4]	C3[4]	no	-	I; PU	**R —** Reserved.
				I/O	-	**PIO1_2 —** General purpose digital input/output pin.
				I	-	**AD3 —** A/D converter, input 3.
				O	-	**CT32B1_MAT1 —** Match output 1 for 32-bit timer 1.
SWDIO/PIO1_3/AD4/ CT32B1_MAT2	D4[4]	D4[4]	no	I/O	I; PU	**SWDIO —** Serial wire debug input/output.
				I/O	-	**PIO1_3 —** General purpose digital input/output pin.
				I	-	**AD4 —** A/D converter, input 4.
				O	-	**CT32B1_MAT2 —** Match output 2 for 32-bit timer 1.
PIO1_6/RXD/ CT32B0_MAT0	C2[3]	C2[3]	no	I/O	I; PU	**PIO1_6 —** General purpose digital input/output pin.
				I	-	**RXD —** Receiver input for UART.
				O	-	**CT32B0_MAT0 —** Match output 0 for 32-bit timer 0.
PIO1_7/TXD/ CT32B0_MAT1	D1[3]	D1[3]	no	I/O	I; PU	**PIO1_7 —** General purpose digital input/output pin.
				O	-	**TXD —** Transmitter output for UART.
				O	-	**CT32B0_MAT1 —** Match output 1 for 32-bit timer 0.
V_{DD}	D2; A1	D2	-	I	-	3.3 V supply voltage to the internal regulator, the external rail, and the ADC. Also used as the ADC reference voltage.
XTALIN	B2[5]	B1[5]	-	I	-	External clock input and input to internal clock generator circuits. Input voltage must not exceed 1.8 V.
V_{SS}	D3; B1	D3	-	I	-	Ground.

[1] Pin state at reset for default function: I = Input; PU = internal pull-up enabled (pins pulled up to full V_{DD} level (V_{DD} = 3.3 V)).

[2] 5 V tolerant pad. See Figure 22 for the reset pad configuration.

[3] 5 V tolerant pad providing digital I/O functions with configurable pull-up/pull-down resistors and configurable hysteresis (see Figure 21).

[4] 5 V tolerant pad providing digital I/O functions with configurable pull-up/pull-down resistors, configurable hysteresis, and analog input. When configured as a ADC input, digital section of the pad is disabled and the pin is not 5 V tolerant (see Figure 21).

[5] When the external clock is not used, connect XTALIN as follows: XTALIN can be left floating or can be grounded (grounding is preferred to reduce susceptibility to noise).

All information provided in this document is subject to legal disclaimers.

© NXP B.V. 2013. All rights reserved.

7. Functional description

7.1 ARM Cortex-M0 processor

The ARM Cortex-M0 is a general purpose, 32-bit microprocessor, which offers high performance and very low power consumption.

7.2 On-chip flash program memory

The LPC1102/1104 contain 32 kB of on-chip flash memory.

Remark: The LPC1102 supports In-Application Programming (IAP) and In-System Programming (ISP). For ISP, since there is no dedicated ISP entry pin, user code is required to invoke ISP functionality. Unprogrammed parts will automatically boot into ISP mode.

7.3 On-chip SRAM

The LPC1102/1104 contain 8 kB on-chip static RAM memory.

7.4 Memory map

The LPC1102/1104 incorporate several distinct memory regions, shown in the following figures. Figure 3 shows the overall map of the entire address space from the user program viewpoint following reset. The interrupt vector area supports address remapping.

The AHB peripheral area is 2 MB in size, and is divided to allow for up to 128 peripherals. The APB peripheral area is 512 kB in size and is divided to allow for up to 32 peripherals. Each peripheral of either type is allocated 16 kB of space. This allows simplifying the address decoding for each peripheral.

All information provided in this document is subject to legal disclaimers.

© NXP B.V. 2013. All rights reserved.

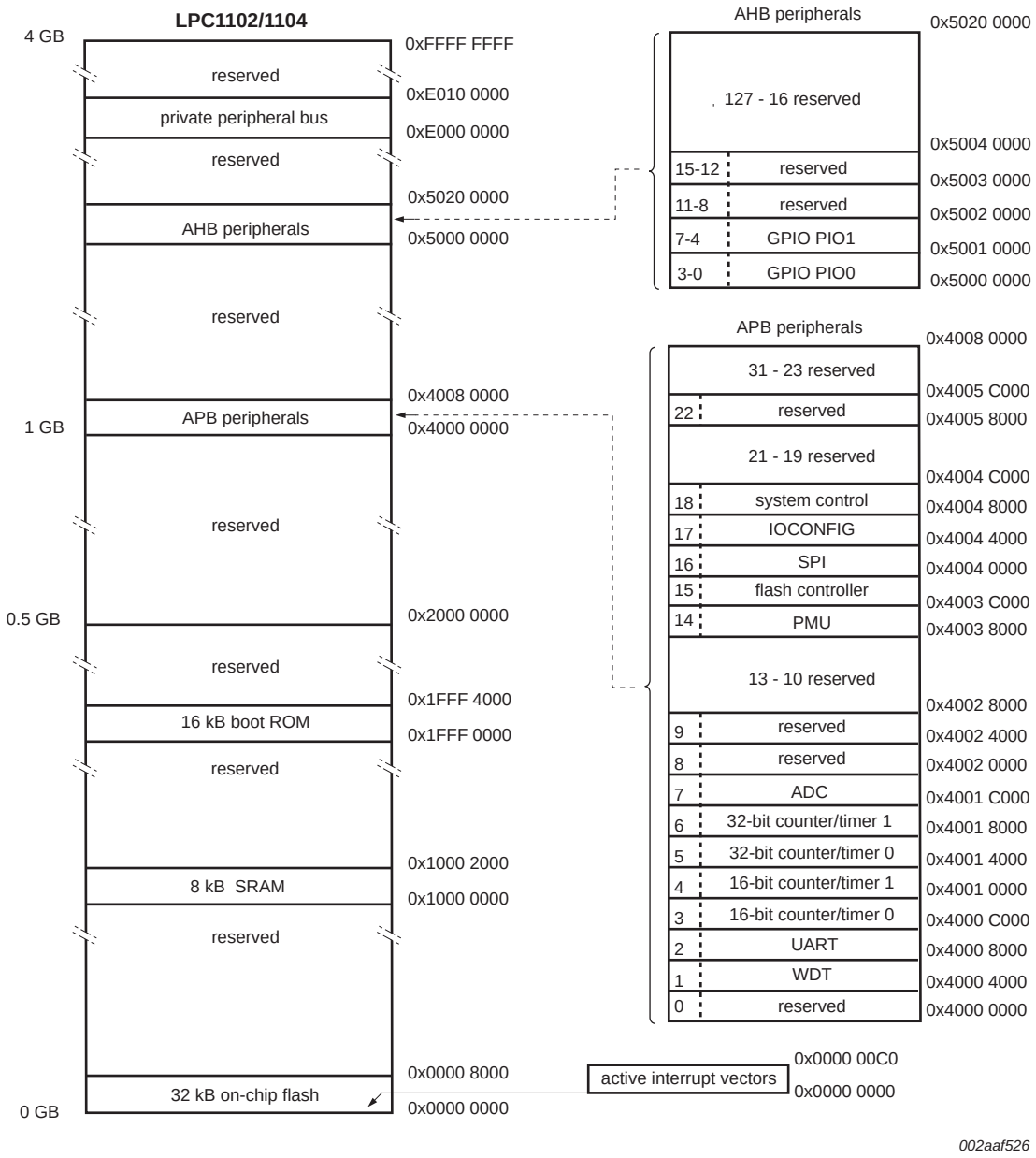

Fig 3. LPC1102/1104 memory map

7.5 Nested Vectored Interrupt Controller (NVIC)

The Nested Vectored Interrupt Controller (NVIC) is an integral part of the Cortex-M0. The tight coupling to the CPU allows for low interrupt latency and efficient processing of late arriving interrupts.

7.5.1 Features

- Controls system exceptions and peripheral interrupts.
- In the LPC1102/1104, the NVIC supports 19 vectored interrupts including up to 6 inputs to the start logic from individual GPIO pins.

All information provided in this document is subject to legal disclaimers.

© NXP B.V. 2013. All rights reserved.

- Four programmable interrupt priority levels, with hardware priority level masking.
- Software interrupt generation.

7.5.2 Interrupt sources

Each peripheral device has one interrupt line connected to the NVIC but may have several interrupt flags. Individual interrupt flags may also represent more than one interrupt source.

Any GPIO pin (total of up to 11 pins) regardless of the selected function, can be programmed to generate an interrupt on a level, or rising edge or falling edge, or both.

7.6 IOCONFIG block

The IOCONFIG block allows selected pins of the microcontroller to have more than one function. Configuration registers control the multiplexers to allow connection between the pin and the on-chip peripherals.

Peripherals should be connected to the appropriate pins prior to being activated and prior to any related interrupt(s) being enabled. Activity of any enabled peripheral function that is not mapped to a related pin should be considered undefined.

7.7 Fast general purpose parallel I/O

Device pins that are not connected to a specific peripheral function are controlled by the GPIO registers. Pins may be dynamically configured as inputs or outputs. Multiple outputs can be set or cleared in one write operation.

The LPC1102/1104 use accelerated GPIO functions:

- GPIO registers are a dedicated AHB peripheral so that the fastest possible I/O timing can be achieved.
- Entire port value can be written in one instruction.

Additionally, any GPIO pin (total of 11 pins) providing a digital function can be programmed to generate an interrupt on a level, a rising or falling edge, or both.

7.7.1 Features

- Bit level port registers allow a single instruction to set or clear any number of bits in one write operation.
- Direction control of individual bits.
- All I/O default to inputs with pull-ups enabled after reset.
- Pull-up/pull-down resistor configuration can be programmed through the IOCONFIG block for each GPIO pin.
- All GPIO pins are pulled up to 3.3 V (V_{DD} = 3.3 V) if their pull-up resistor is enabled in the IOCONFIG block.
- Programmable open-drain mode.

7.8 UART

The LPC1102/1104 contain one UART.

All information provided in this document is subject to legal disclaimers.

© NXP B.V. 2013. All rights reserved.

Support for RS-485/9-bit mode allows both software address detection and automatic address detection using 9-bit mode.

The UART includes a fractional baud rate generator. Standard baud rates such as 115200 Bd can be achieved with any crystal frequency above 2 MHz.

7.8.1 Features

- Maximum UART data bit rate of 3.125 Mbit/s.
- 16 Byte Receive and Transmit FIFOs.
- Register locations conform to 16C550 industry standard.
- Receiver FIFO trigger points at 1 B, 4 B, 8 B, and 14 B.
- Built-in fractional baud rate generator covering wide range of baud rates without a need for external crystals of particular values.
- FIFO control mechanism that enables software flow control implementation.
- Support for RS-485/9-bit mode.

7.9 SPI serial I/O controller

The LPC1102/1104 contain one SPI controller and fully supports SSP features.

The SPI controller is capable of operation on a SSP, 4-wire SSI, or Microwire bus. It can interact with multiple masters and slaves on the bus. Only a single master and a single slave can communicate on the bus during a given data transfer. The SPI supports full duplex transfers, with frames of 4 bits to 16 bits of data flowing from the master to the slave and from the slave to the master. In practice, often only one of these data flows carries meaningful data.

Remark: Care must be taken when using the SPI because the SPI clock SCK and the serial wire debug clock SWCLK share the same pin on the WLCSP16 package. Once the SPI is enabled, the serial wire debugger is no longer available (LPC1102 only).

7.9.1 Features

- Maximum SPI speed of 25 Mbit/s (master) or 4.17 Mbit/s (slave) (in SSP mode)
- Compatible with Motorola SPI, 4-wire Texas Instruments SSI, and National Semiconductor Microwire buses
- Synchronous serial communication
- Master or slave operation
- 8-frame FIFOs for both transmit and receive
- 4-bit to 16-bit frame

7.10 10-bit ADC

The LPC1102/1104 contain one ADC. It is a single 10-bit successive approximation ADC with five channels.

7.10.1 Features

- 10-bit successive approximation ADC.

All information provided in this document is subject to legal disclaimers.

© NXP B.V. 2013. All rights reserved.

- Input multiplexing among 5 pins.
- Power-down mode.
- Measurement range 0 V to V_{DD}.
- 10-bit conversion time $\geq$ 2.44 μs (up to 400 kSamples/s).
- Burst conversion mode for single or multiple inputs.
- Optional conversion on transition of input pin or timer match signal.
- Individual result registers for each ADC channel to reduce interrupt overhead.

7.11 General purpose external event counter/timers

The LPC1102/1104 include two 32-bit counter/timers and two 16-bit counter/timers. The counter/timer is designed to count cycles of the system derived clock. It can optionally generate interrupts or perform other actions at specified timer values, based on four match registers. Each counter/timer also includes one capture input to trap the timer value when an input signal transitions, optionally generating an interrupt.

7.11.1 Features

- A 32-bit/16-bit timer/counter with a programmable 32-bit/16-bit prescaler.
- Counter or timer operation.
- One capture channel that can take a snapshot of the timer value when an input signal transitions. A capture event may also generate an interrupt.
- Four match registers per timer that allow:
  - Continuous operation with optional interrupt generation on match.
  - Stop timer on match with optional interrupt generation.
  - Reset timer on match with optional interrupt generation.
- Up to four external outputs corresponding to match registers, with the following capabilities:
  - Set LOW on match.
  - Set HIGH on match.
  - Toggle on match.
  - Do nothing on match.

7.12 System tick timer

The ARM Cortex-M0 includes a system tick timer (SYSTICK) that is intended to generate a dedicated SYSTICK exception at a fixed time interval (typically 10 ms).

7.13 Windowed WatchDog Timer

The purpose of the watchdog is to reset the controller if software fails to periodically service it within a programmable time window.

7.13.1 Features

- Internally resets chip if not periodically reloaded during the programmable time-out period.

All information provided in this document is subject to legal disclaimers.

© NXP B.V. 2013. All rights reserved.

- Optional windowed operation requires reload to occur between a minimum and maximum time period, both programmable.
- Optional warning interrupt can be generated at a programmable time prior to watchdog time-out.
- Enabled by software but requires a hardware reset or a watchdog reset/interrupt to be disabled.
- Incorrect feed sequence causes reset or interrupt if enabled.
- Flag to indicate watchdog reset.
- Programmable 24-bit timer with internal prescaler.
- Selectable time period from ($T_{cy(WDCLK)} \times 256 \times 4$) to ($T_{cy(WDCLK)} \times 2^{24} \times 4$) in multiples of $T_{cy(WDCLK)} \times 4$.
- The Watchdog Clock (WDCLK) source can be selected from the IRC or the dedicated watchdog oscillator (WDO). This gives a wide range of potential timing choices of watchdog operation under different power conditions.

7.14 Clocking and power control

7.14.1 Crystal oscillators

The LPC1102/1104 include two independent oscillators. These are the Internal RC oscillator (IRC) and the Watchdog oscillator. Each oscillator can be used for more than one purpose as required in a particular application.

Following reset, the LPC1102/1104 operate from the Internal RC oscillator until switched by software. This allows systems to operate without any external crystal and the bootloader code to operate at a known frequency.

See Figure 4 for an overview of the LPC1102/1104 clock generation.

All information provided in this document is subject to legal disclaimers.

© NXP B.V. 2013. All rights reserved.

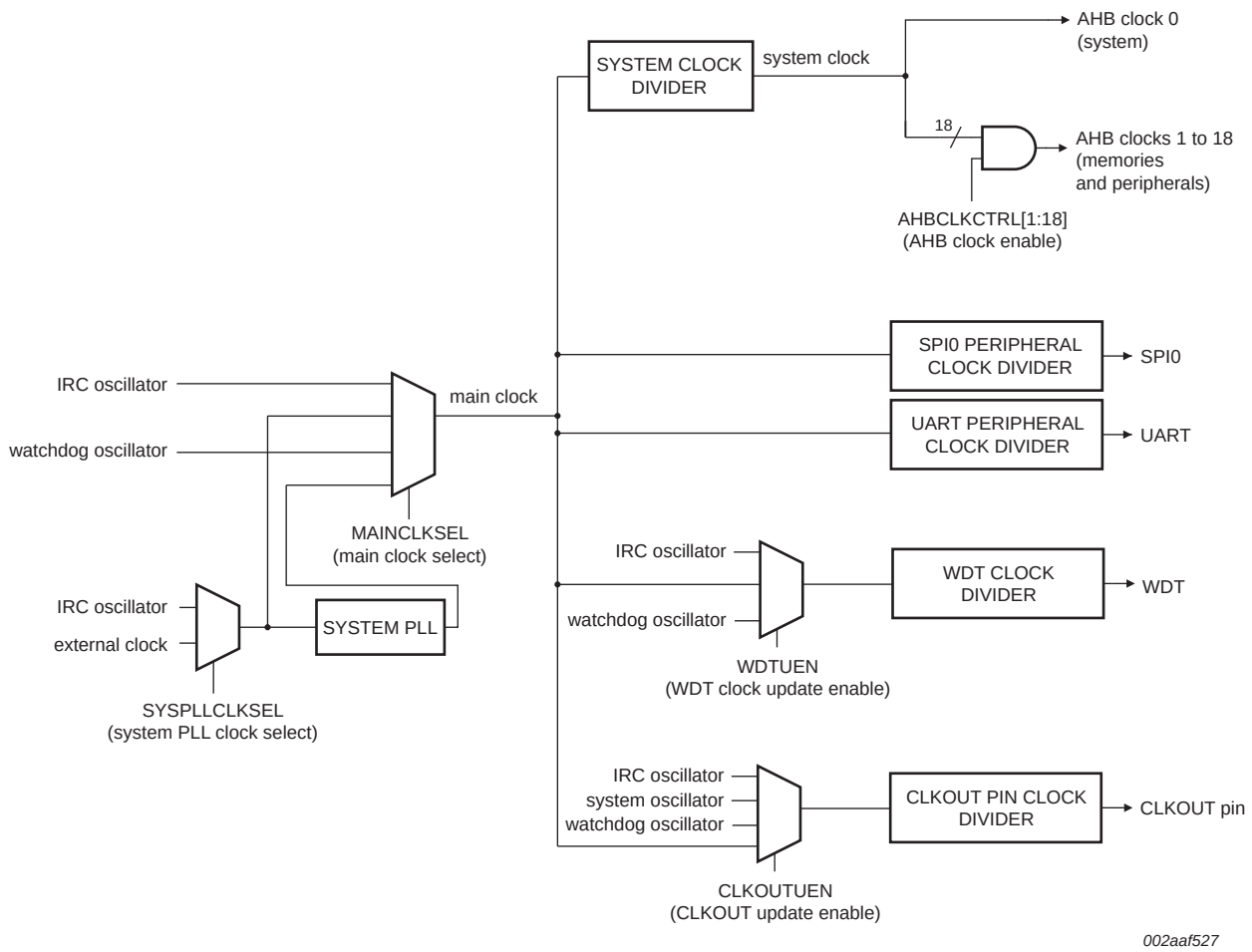

Fig 4. LPC1102/1104 clock generation block diagram

7.14.1.1 Internal RC oscillator

The IRC may be used as the clock source for the WDT, and/or as the clock that drives the PLL and subsequently the CPU. The nominal IRC frequency is 12 MHz. The IRC is trimmed to 1 % accuracy over the entire voltage and temperature range.

Upon power-up or any chip reset, the LPC1102/1104 use the IRC as the clock source. Software may later switch to one of the other available clock sources.

7.14.1.2 Watchdog oscillator

The watchdog oscillator can be used as a clock source that directly drives the CPU or the watchdog timer. The watchdog oscillator nominal frequency is programmable between 9.4 kHz to 2.3 MHz. The frequency spread over processing and temperature is ±40 %.

7.14.2 System PLL

The PLL accepts an input clock frequency in the range of 10 MHz to 25 MHz. The input frequency is multiplied up to a high frequency with a Current Controlled Oscillator (CCO). The multiplier can be an integer value from 1 to 32. The CCO operates in the range of 156 MHz to 320 MHz, so there is an additional divider in the loop to keep the CCO within

All information provided in this document is subject to legal disclaimers.

© NXP B.V. 2013. All rights reserved.

its frequency range while the PLL is providing the desired output frequency. The PLL output frequency must be lower than 100 MHz. The output divider may be set to divide by 2, 4, 8, or 16 to produce the output clock. Since the minimum output divider value is 2, it is insured that the PLL output has a 50 % duty cycle. The PLL is turned off and bypassed following a chip reset and may be enabled by software. The program must configure and activate the PLL, wait for the PLL to lock, and then connect to the PLL as a clock source. The PLL settling time is 100 μs.

7.14.3 Clock output (LPC1104 only)

The LPC1104 features a clock output function that routes the IRC oscillator, the system oscillator, the watchdog oscillator, or the main clock to an output pin.

7.14.4 Wake-up process

The LPC1102/1104 begin operation at power-up by using the 12 MHz IRC oscillator as the clock source. This allows chip operation to resume quickly. If an external clock or the PLL is needed by the application, software will need to enable these features and wait for them to stabilize before they are used as a clock source.

7.14.5 Power control

The LPC1102/1104 support a variety of power control features. There are two special modes of processor power reduction: Sleep mode and Deep-sleep mode. The CPU clock rate may also be controlled as needed by changing clock sources, reconfiguring PLL values, and/or altering the CPU clock divider value. This allows a trade-off of power versus processing speed based on application requirements. In addition, a register is provided for shutting down the clocks to individual on-chip peripherals, allowing fine tuning of power consumption by eliminating all dynamic power use in any peripherals that are not required for the application. Selected peripherals have their own clock divider which provides even better power control.

7.14.5.1 Power profiles

The power consumption in Active and Sleep modes can be optimized for the application through a simple call to the power profiles. The power configuration routine configures the LPC1102/1104 for one of the following power modes:

- Default mode corresponding to power configuration after reset.
- CPU performance mode corresponding to optimized processing capability.
- Efficiency mode corresponding to optimized balance of current consumption and CPU performance.
- Low-current mode corresponding to lowest power consumption.

In addition, the power profiles includes a routine to select the optimal PLL settings for a given system clock and PLL input clock.

7.14.5.2 Sleep mode

When Sleep mode is entered, the clock to the core is stopped. Resumption from the Sleep mode does not need any special sequence but re-enabling the clock to the ARM core.

All information provided in this document is subject to legal disclaimers.

© NXP B.V. 2013. All rights reserved.

In Sleep mode, execution of instructions is suspended until either a reset or interrupt occurs. Peripheral functions continue operation during Sleep mode and may generate interrupts to cause the processor to resume execution. Sleep mode eliminates dynamic power used by the processor itself, memory systems and related controllers, and internal buses.

7.14.5.3 Deep-sleep mode

In Deep-sleep mode, the chip is in Sleep mode, and in addition all analog blocks are shut down except for the watchdog oscillator and the BOD circuit, which can be configured to remain running in Deep-sleep mode to allow a reset initiated by a timer or BOD event. Deep-sleep mode allows for additional power savings.

Six of the GPIO pins (see Table 3) serve as external wake-up pins to a dedicated start logic to wake up the chip from Deep-sleep mode.

The clock source should be switched to IRC before entering Deep-sleep mode unless the watchdog oscillator remains running in Deep-sleep mode. The IRC can be switched on and off glitch-free and provides a clean clock signal after start-up.

7.15 System control

7.15.1 Start logic

The start logic connects external pins to corresponding interrupts in the NVIC. Each pin shown in Table 3 as input to the start logic has an individual interrupt in the NVIC interrupt vector table. The start logic pins can serve as external interrupt pins when the chip is running. In addition, an input signal on the start logic pins can wake up the chip from Deep-sleep mode when all clocks are shut down.

The start logic must be configured in the system configuration block and in the NVIC before being used.

7.15.2 Reset

Reset has four sources on the LPC1102/1104: the $\overline{\text{RESET}}$ pin, the Watchdog reset, Power-On Reset (POR), and the BrownOut Detection (BOD) circuit. In addition, there is an ARM software reset. The $\overline{\text{RESET}}$ pin is a Schmitt trigger input pin. Assertion of chip reset by any source, once the operating voltage attains a usable level, starts the IRC and initializes the flash controller.

A LOW-going pulse as short as 50 ns resets the part.

When the internal Reset is removed, the processor begins executing at address 0, which is initially the Reset vector mapped from the boot block. At that point, all of the processor and peripheral registers have been initialized to predetermined values.

7.15.3 Brownout detection

The LPC1102/1104 include up to four levels for monitoring the voltage on the V_{DD} pin. If this voltage falls below one of the three selected levels, the BOD asserts an interrupt signal to the NVIC. This signal can be enabled for interrupt in the Interrupt Enable Register in the NVIC in order to cause a CPU interrupt; if not, software can monitor the signal by reading a dedicated status register. Four additional threshold levels can be selected to cause a forced reset of the chip.

All information provided in this document is subject to legal disclaimers.

© NXP B.V. 2013. All rights reserved.

7.15.4 Code security (Code Read Protection - CRP)

This feature of the LPC1102/1104 allow user to enable different levels of security in the system so that access to the on-chip flash and use of the Serial Wire Debugger (SWD) can be restricted. When needed, CRP is invoked by programming a specific pattern into a dedicated flash location. IAP commands are not affected by the CRP.

There are three levels of Code Read Protection:

1. CRP1 disables access to the chip via the SWD and allows partial flash update (excluding flash sector 0). This mode is useful when CRP is required and flash field updates are needed but all sectors can not be erased.
2. CRP2 disables access to the chip via the SWD and only allows full flash erase and update.
3. Running an application with level CRP3 selected fully disables any access to the chip via the SWD pins.

Remark: The LPC1102 does not provide an ISP entry pin to be monitored at reset. For all three CRP levels, the user's application code must provide a flash update mechanism which reinvokes ISP by defining a user-selected PIOn pin for ISP entry.

CAUTION



If Code Read Protection of any level (CRP1, CRP2 or CRP3) is selected, no future factory testing can be performed on the device.

7.15.5 APB interface

The APB peripherals are located on one APB bus.

7.15.6 AHBLite

The AHBLite connects the CPU bus of the ARM Cortex-M0 to the flash memory, the main static RAM, and the Boot ROM.

7.15.7 External interrupt inputs

All GPIO pins can be level or edge sensitive interrupt inputs. In addition, start logic inputs serve as external interrupts (see Section 7.15.1).

7.16 Emulation and debugging

Debug functions are integrated into the ARM Cortex-M0. Serial wire debug with four breakpoints and two watchpoints is supported.

Remark: Care must be taken when using the SPI because the SPI clock SCK and the serial wire debug clock SWCLK share the same pin on the WLCSP16 package. Once the SPI is enabled, the serial wire debugger is no longer available (LPC1102 only).

All information provided in this document is subject to legal disclaimers.

© NXP B.V. 2013. All rights reserved.

8. Limiting values

Table 4. Limiting values

In accordance with the Absolute Maximum Rating System (IEC 60134).[1]

Symbol	Parameter	Conditions		Min	Max	Unit
V_{DD}	supply voltage (core and external rail)		[2]	–0.5	+4.6	V
V_I	input voltage	5 V tolerant I/O pins; $V_{DD} \geq 1.8$ V	[2][3]	–0.5	+5.5	V
		$V_{DD} = 0$ V		–0.5	+3.6	V
V_{IA}	analog input voltage	pin configured as analog input	[2][4]	–0.5	+4.6	V
I_{DD}	supply current	per supply pin	[5]	-	100	mA
I_{SS}	ground current	per ground pin	[5]	-	100	mA
I_{latch}	I/O latch-up current	$-(0.5V_{DD}) < V_I < (1.5V_{DD})$; $T_j < 125$ °C		-	100	mA
T_{stg}	storage temperature	non-operating	[6]	–65	+150	°C
$T_{j(max)}$	maximum junction temperature			-	150	°C
$P_{tot(pack)}$	total power dissipation (per package)	based on package heat transfer, not device power consumption		-	1.5	W
V_{ESD}	electrostatic discharge voltage	human body model; all pins	[7]		6500	V

[1] The following applies to the limiting values:

a) This product includes circuitry specifically designed for the protection of its internal devices from the damaging effects of excessive static charge. Nonetheless, it is suggested that conventional precautions be taken to avoid applying greater than the rated maximum.

b) Parameters are valid over operating temperature range unless otherwise specified. All voltages are with respect to V_{SS} unless otherwise noted.

c) The limiting values are stress ratings only. Operating the part at these values is not recommended and proper operation is not guaranteed. The conditions for functional operation are specified in Table 5.

[2] Maximum/minimum voltage above the maximum operating voltage (see Table 5) and below ground that can be applied for a short time (< 10 ms) to a device without leading to irrecoverable failure. Failure includes the loss of reliability and shorter lifetime of the device.

[3] Including voltage on outputs in 3-state mode.

[4] See Table 6 for maximum operating voltage.

[5] The peak current is limited to 25 times the corresponding maximum current.

[6] The maximum non-operating storage temperature is different than the temperature for required shelf life which should be determined based on required shelf lifetime. Please refer to the JEDEC spec (J-STD-033B.1) for further details.

[7] Human body model: equivalent to discharging a 100 pF capacitor through a 1.5 kΩ series resistor.

All information provided in this document is subject to legal disclaimers.

© NXP B.V. 2013. All rights reserved.

9. Static characteristics

Table 5. Static characteristics

T_{amb} = −40 °C to +85 °C, unless otherwise specified.

Symbol	Parameter	Conditions		Min	Typ[1]	Max	Unit
V_{DD}	supply voltage (core and external rail)			1.8	3.3	3.6	V
I_{DD}	supply current	Active mode; code `while(1){}` executed from flash					
		system clock = 12 MHz; V_{DD} = 3.3 V	[2][3][4][5][6]	-	2	-	mA
		system clock = 50 MHz; V_{DD} = 3.3 V	[2][3][5][6][7]	-	7	-	mA
		Sleep mode; system clock = 12 MHz; V_{DD} = 3.3 V	[2][3][4][5][6]	-	1	-	mA
		Deep-sleep mode; V_{DD} = 3.3 V	[2][3][8]	-	2	-	µA
Standard port pins, $\overline{\text{RESET}}$							
I_{IL}	LOW-level input current	V_I = 0 V; on-chip pull-up resistor disabled		-	0.5	10	nA
I_{IH}	HIGH-level input current	V_I = V_{DD}; on-chip pull-down resistor disabled		-	0.5	10	nA
I_{OZ}	OFF-state output current	V_O = 0 V; V_O = V_{DD}; on-chip pull-up/down resistors disabled		-	0.5	10	nA
V_I	input voltage	pin configured to provide a digital function; $V_{DD} \geq 1.8$ V; 5 V tolerant pins	[9]	0	-	5.0	V
		V_{DD} = 0 V		0	-	3.6	V
V_O	output voltage	output active		0	-	V_{DD}	V
V_{IH}	HIGH-level input voltage			$0.7V_{DD}$	-	-	V
V_{IL}	LOW-level input voltage			-	-	$0.3V_{DD}$	V
V_{hys}	hysteresis voltage			-	0.4	-	V
V_{OH}	HIGH-level output voltage	2.5 V ≤ V_{DD} ≤ 3.6 V; I_{OH} = −4 mA		V_{DD} − 0.4	-	-	V
		1.8 V ≤ V_{DD} < 2.5 V; I_{OH} = −3 mA		V_{DD} − 0.4	-	-	V
V_{OL}	LOW-level output voltage	2.5 V ≤ V_{DD} ≤ 3.6 V; I_{OL} = 4 mA		-	-	0.4	V
		1.8 V ≤ V_{DD} < 2.5 V; I_{OL} = 3 mA		-	-	0.4	V

All information provided in this document is subject to legal disclaimers.

© NXP B.V. 2013. All rights reserved.

Table 5. Static characteristics *…continued*

T_{amb} = −40 °C to +85 °C, unless otherwise specified.

Symbol	Parameter	Conditions	Min	Typ[1]	Max	Unit
I_{OH}	HIGH-level output current	$V_{OH} = V_{DD} - 0.4$ V; 2.5 V ≤ V_{DD} ≤ 3.6 V	−4	-	-	mA
		1.8 V ≤ V_{DD} < 2.5 V	−3	-	-	mA
I_{OL}	LOW-level output current	V_{OL} = 0.4 V; 2.5 V ≤ V_{DD} ≤ 3.6 V	4	-	-	mA
		1.8 V ≤ V_{DD} < 2.5 V	3	-	-	mA
I_{OHS}	HIGH-level short-circuit output current	V_{OH} = 0 V [11]	-	-	−45	mA
I_{OLS}	LOW-level short-circuit output current	$V_{OL} = V_{DD}$ [11]	-	-	50	mA
I_{pd}	pull-down current	V_I = 5 V	10	50	150	µA
I_{pu}	pull-up current	V_I = 0 V; 2.0 V ≤ V_{DD} ≤ 3.6 V	−15	−50	−85	µA
		1.8 V ≤ V_{DD} < 2.0 V	−10	−50	−85	µA
		$V_{DD} < V_I$ < 5 V	0	0	0	µA
External clock input						
$V_{i(xtal)}$	crystal input voltage		−0.5	1.8	1.95	V

[1] Typical ratings are not guaranteed. The values listed are at room temperature (25 °C), nominal supply voltages.

[2] T_{amb} = 25 °C.

[3] I_{DD} measurements were performed with all pins configured as GPIO outputs driven LOW and pull-up resistors disabled.

[4] IRC enabled; external clock disabled; system PLL disabled.

[5] BOD disabled.

[6] All peripherals disabled in the SYSAHBCLKCTRL register. Peripheral clocks to UART and SPI0/1 disabled in system configuration block. Low-current mode PWR_LOW_CURRENT selected when running the set_power routine in the power profiles.

[7] IRC disabled; system oscillator enabled; system PLL enabled.

[8] All oscillators and analog blocks turned off in the PDSLEEPCFG register; PDSLEEPCFG = 0x0000 18FF. Before entering deep-sleep mode, you must write a 0 to bit 4 and bit 5 of the GPIO0DATA register at location 0x5000 3FFC and a 1 to bit 4 and bit 5 of the GPIO0DIR register at location 0x5000 8000.

[9] Including voltage on outputs in 3-state mode.

[10] V_{DD} supply voltage must be present.

[11] Allowed as long as the current limit does not exceed the maximum current allowed by the device.

All information provided in this document is subject to legal disclaimers.

© NXP B.V. 2013. All rights reserved.

Table 6. ADC static characteristics

T_{amb} = −40 °C to +85 °C unless otherwise specified; ADC frequency 4.5 MHz, V_{DD} = 2.5 V to 3.6 V.

Symbol	Parameter	Conditions		Min	Typ	Max	Unit
V_{IA}	analog input voltage			0	-	V_{DD}	V
C_{ia}	analog input capacitance			-	-	1	pF
E_D	differential linearity error		[1][2]	-	-	±1	LSB
$E_{L(adj)}$	integral non-linearity		[3]	-	-	±1.5	LSB
E_O	offset error		[4]	-	-	±3.5	LSB
E_G	gain error		[5]	-	-	0.6	%
E_T	absolute error		[6]	-	-	±4	LSB
R_{vsi}	voltage source interface resistance			-	-	40	kΩ
R_i	input resistance		[7][8]	-	-	2.5	MΩ

[1] The ADC is monotonic, there are no missing codes.

[2] The differential linearity error (E_D) is the difference between the actual step width and the ideal step width. See Figure 5.

[3] The integral non-linearity ($E_{L(adj)}$) is the peak difference between the center of the steps of the actual and the ideal transfer curve after appropriate adjustment of gain and offset errors. See Figure 5.

[4] The offset error (E_O) is the absolute difference between the straight line which fits the actual curve and the straight line which fits the ideal curve. See Figure 5.

[5] The gain error (E_G) is the relative difference in percent between the straight line fitting the actual transfer curve after removing offset error, and the straight line which fits the ideal transfer curve. See Figure 5.

[6] The absolute error (E_T) is the maximum difference between the center of the steps of the actual transfer curve of the non-calibrated ADC and the ideal transfer curve. See Figure 5.

[7] T_{amb} = 25 °C; maximum sampling frequency f_s = 400 kSamples/s and analog input capacitance C_{ia} = 1 pF.

[8] Input resistance R_i depends on the sampling frequency f_s: $R_i = 1 / (f_s \times C_{ia})$.

All information provided in this document is subject to legal disclaimers.

© NXP B.V. 2013. All rights reserved.

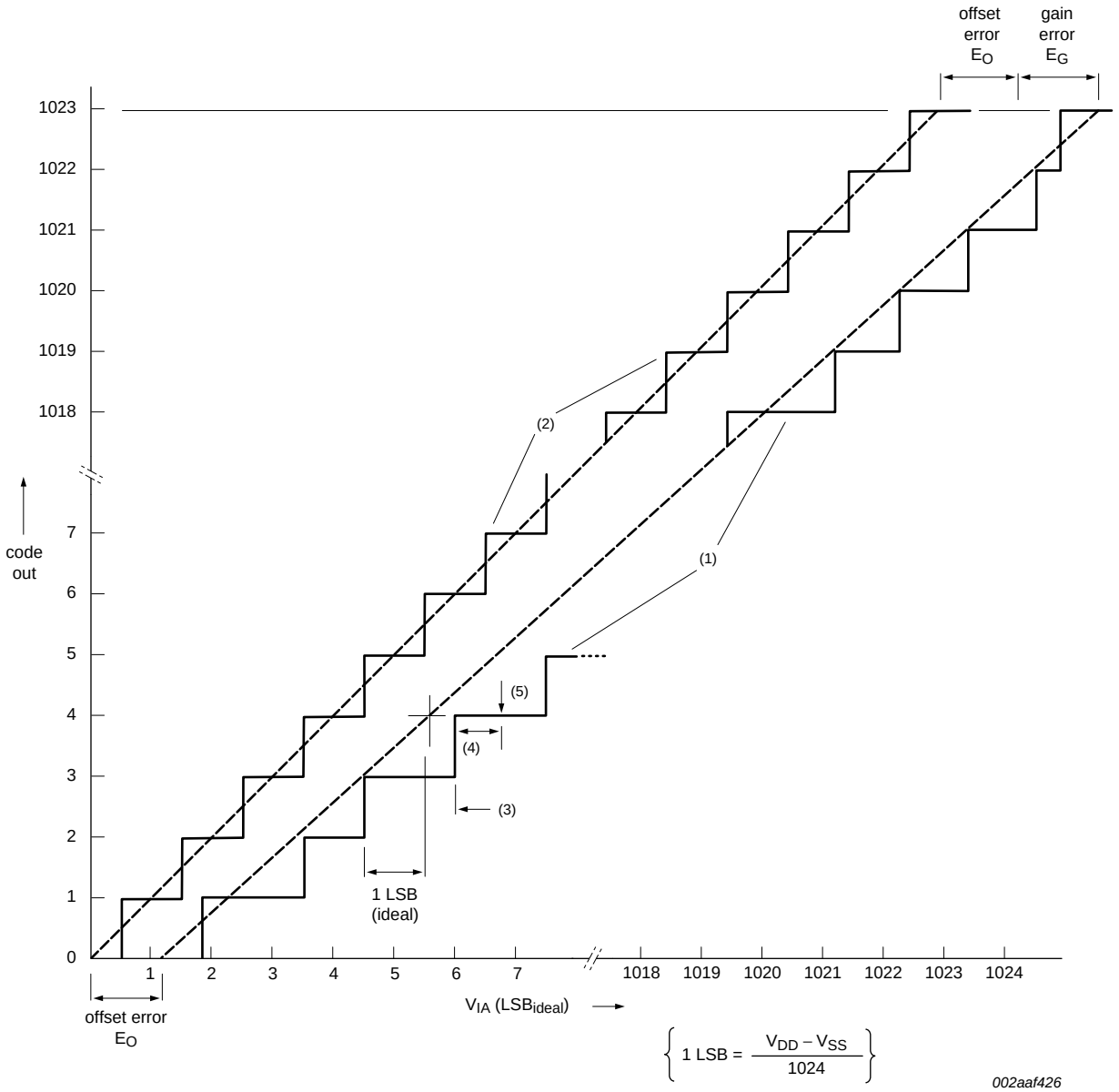

(1) Example of an actual transfer curve.

(2) The ideal transfer curve.

(3) Differential linearity error (E_D).

(4) Integral non-linearity ($E_{L(adj)}$).

(5) Center of a step of the actual transfer curve.

Fig 5. ADC characteristics

All information provided in this document is subject to legal disclaimers.

© NXP B.V. 2013. All rights reserved.

9.1 BOD static characteristics

Table 7. BOD static characteristics[1]

T_{amb} = 25 °C.

Symbol	Parameter	Conditions	Min	Typ	Max	Unit
V_{th}	threshold voltage	interrupt level 1				
		assertion	-	2.22	-	V
		de-assertion	-	2.35	-	V
		interrupt level 2				
		assertion	-	2.52	-	V
		de-assertion	-	2.66	-	V
		interrupt level 3				
		assertion	-	2.80	-	V
		de-assertion	-	2.90	-	V
		reset level 0				
		assertion	-	1.46	-	V
		de-assertion	-	1.63	-	V
		reset level 1				
		assertion	-	2.06	-	V
		de-assertion	-	2.15	-	V
		reset level 2				
		assertion	-	2.35	-	V
		de-assertion	-	2.43	-	V
		reset level 3				
		assertion	-	2.63	-	V
		de-assertion	-	2.71	-	V

[1] Interrupt levels are selected by writing the level value to the BOD control register BODCTRL, see *User manual UM10429*.

9.2 Power consumption

Power measurements in Active, Sleep, and Deep-sleep modes were performed under the following conditions (see *user manual UM10429*):

- All digital pins configured as GPIO with pull-up resistor disabled in the IOCONFIG block.
- GPIO pins configured as outputs using the GPIOnDIR registers.
- Write 0 to all GPIOnDATA registers to drive the outputs LOW.
- Write a 1 to bit 4 and bit 5 of the GPIO0DIR register at location 0x5000 8000 and a 0 to bit 4 and bit 5 of the GPIO0DATA register at location 0x5000 3FFC. This ensures that not-bonded out pins are in a well-defined state.

All information provided in this document is subject to legal disclaimers.

© NXP B.V. 2013. All rights reserved.

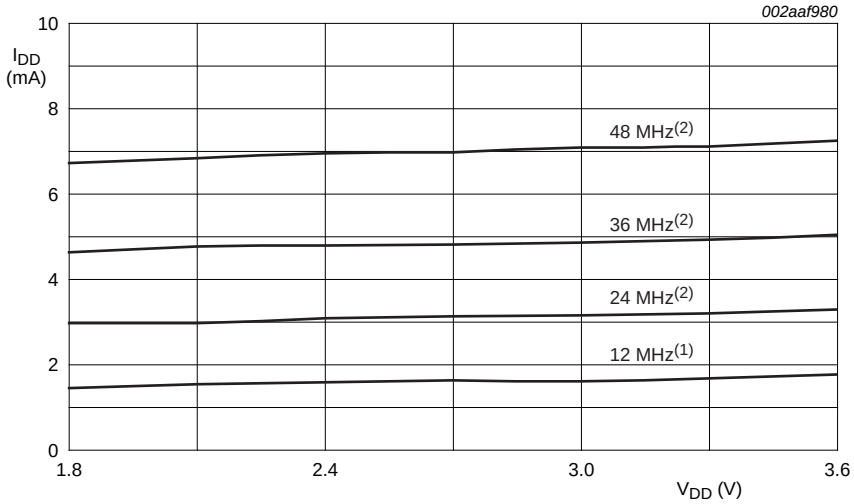

Conditions: T_{amb} = 25 °C; active mode entered executing code `while(1){}` from flash; all peripherals disabled in the SYSAHBCLKCTRL register (SYSAHBCLKCTRL= 0x1F); all peripheral clocks disabled; internal pull-up resistors disabled; BOD disabled; low-current mode.

(1) System PLL disabled; IRC enabled.

(2) System PLL enabled; IRC disabled.

Fig 6. Active mode: Typical supply current I_{DD} versus supply voltage V_{DD} for different system clock frequencies

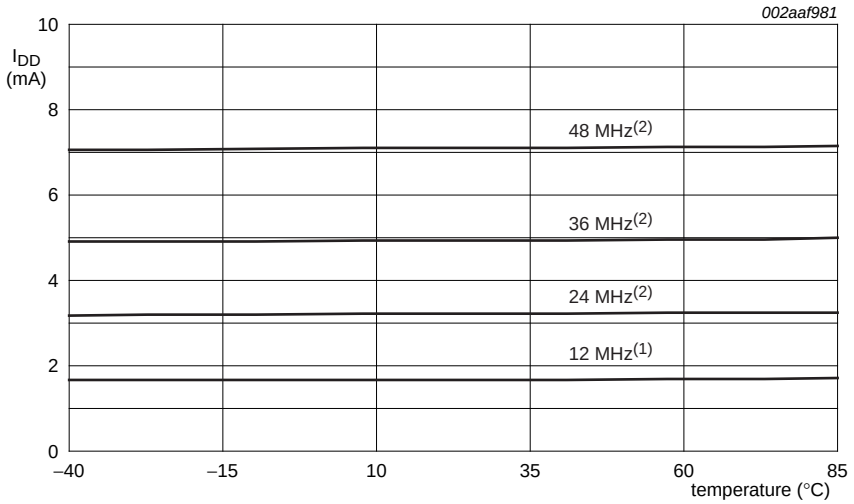

Conditions: V_{DD} = 3.3 V; active mode entered executing code `while(1){}` from flash; all peripherals disabled in the SYSAHBCLKCTRL register (SYSAHBCLKCTRL= 0x1F); all peripheral clocks disabled; internal pull-up resistors disabled; BOD disabled; low-current mode.

(1) System PLL disabled; IRC enabled.

(2) System PLL enabled; IRC disabled.

Fig 7. Active mode: Typical supply current I_{DD} versus temperature for different system clock frequencies

All information provided in this document is subject to legal disclaimers.

© NXP B.V. 2013. All rights reserved.

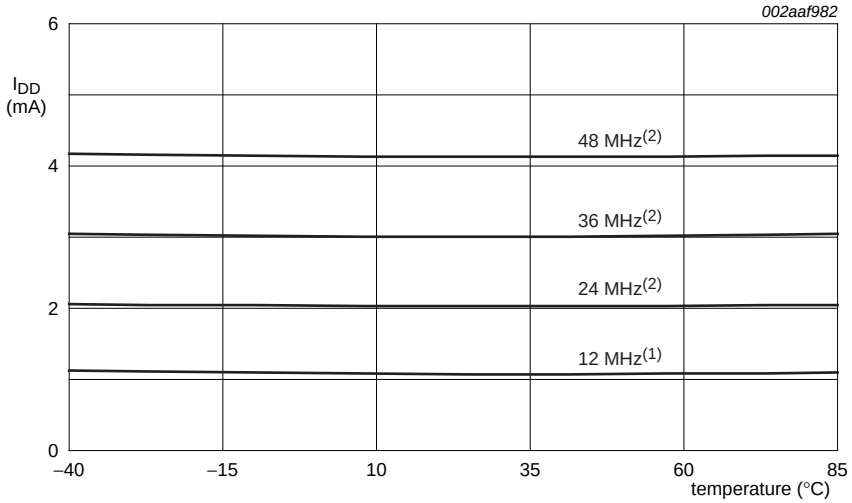

Conditions: V_{DD} = 3.3 V; sleep mode entered from flash; all peripherals disabled in the SYSAHBCLKCTRL register (SYSAHBCLKCTRL= 0x1F); all peripheral clocks disabled; internal pull-up resistors disabled; BOD disabled; low-current mode.

(1) System PLL disabled; IRC enabled.

(2) System PLL enabled; IRC disabled.

Fig 8. Sleep mode: Typical supply current I_{DD} versus temperature for different system clock frequencies

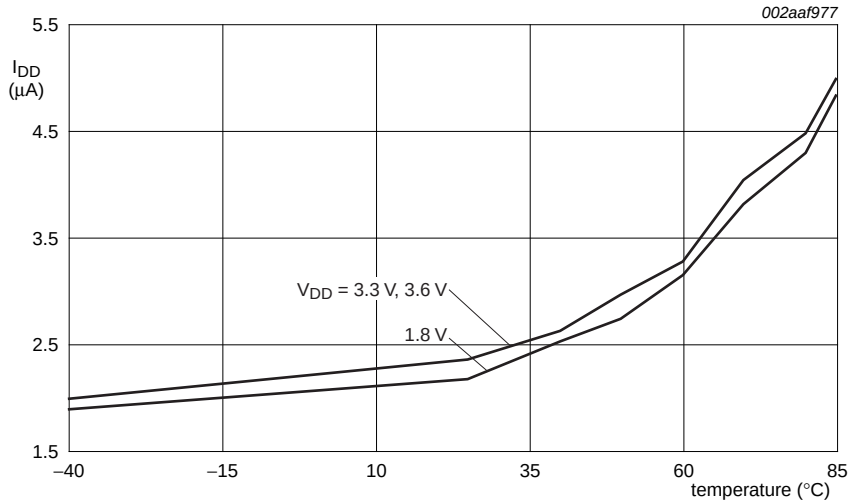

Conditions: BOD disabled; all oscillators and analog blocks disabled in the PDSLEEPCFG register (PDSLEEPCFG = 0x0000 18FF).

Remark: Before entering deep-sleep mode, you must write a 0 to bit 4 and bit 5 of the GPIO0DATA register at location 0x5000 3FFC and a 1 to bit 4 and bit 5 of the GPIO0DIR register at location 0x5000 8000.

Fig 9. Deep-sleep mode: Typical supply current I_{DD} versus temperature for different supply voltages V_{DD}

All information provided in this document is subject to legal disclaimers.

© NXP B.V. 2013. All rights reserved.

9.3 CoreMark data

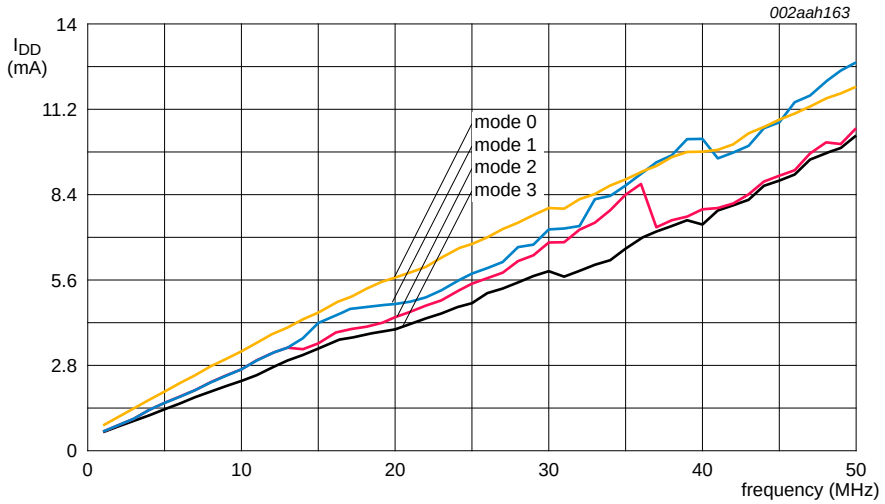

External signal generator providing 1 MHz to 20 MHz signal drives the XTALIN input; when testing 1 MHz to 19 MHz the system PLL is OFF, SYSAHBCLKDIV = 1; when testing 20 MHz to 50 MHz the system PLL is configured so that SYSAHBCLKDIV = 1.

Fig 10. CoreMark current consumption for power modes 0, 1, 2, and 3

9.4 Electrical pin characteristics

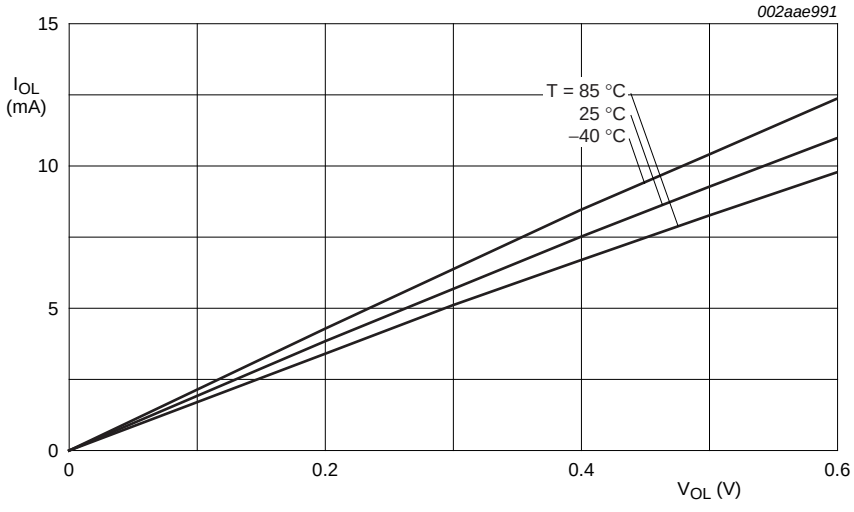

Conditions: V_{DD} = 3.3 V; standard port pins.

Fig 11. Typical LOW-level output current I_{OL} versus LOW-level output voltage V_{OL}

All information provided in this document is subject to legal disclaimers.

© NXP B.V. 2013. All rights reserved.

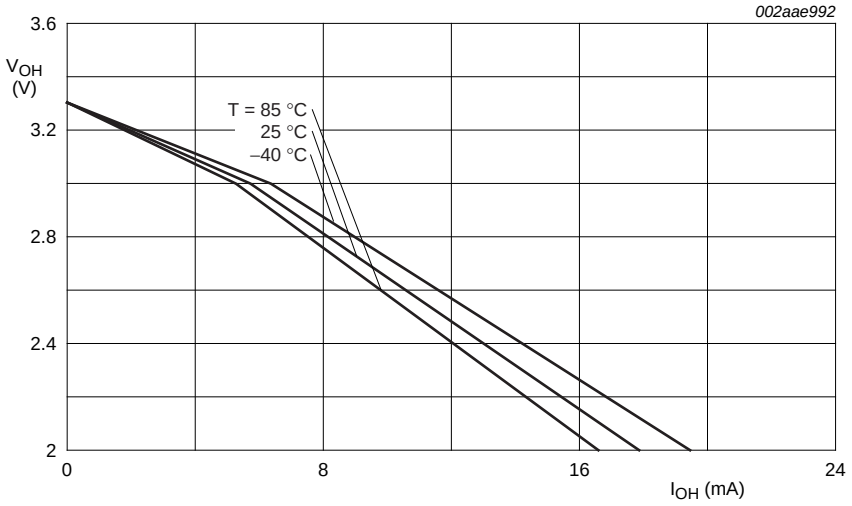

Conditions: V_{DD} = 3.3 V; standard port pins.

Fig 12. Typical HIGH-level output voltage V_{OH} versus HIGH-level output source current I_{OH}

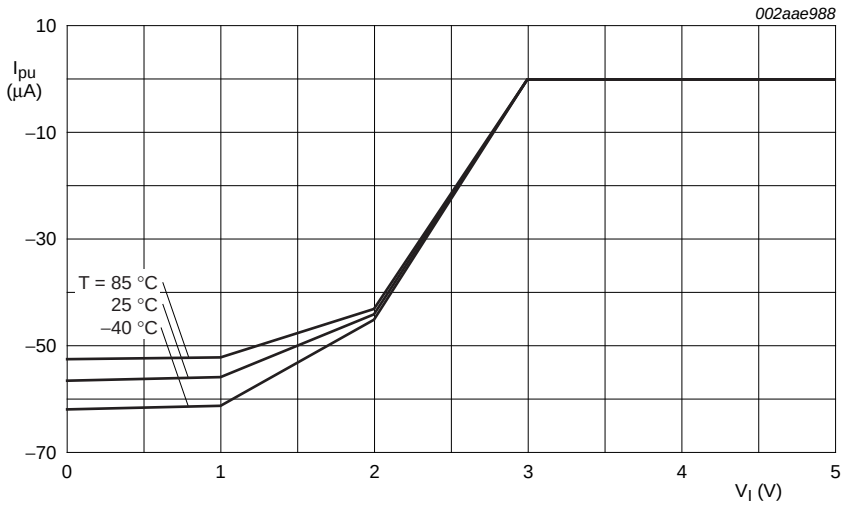

Conditions: V_{DD} = 3.3 V; standard port pins.

Fig 13. Typical pull-up current I_{pu} versus input voltage V_I

All information provided in this document is subject to legal disclaimers.

© NXP B.V. 2013. All rights reserved.

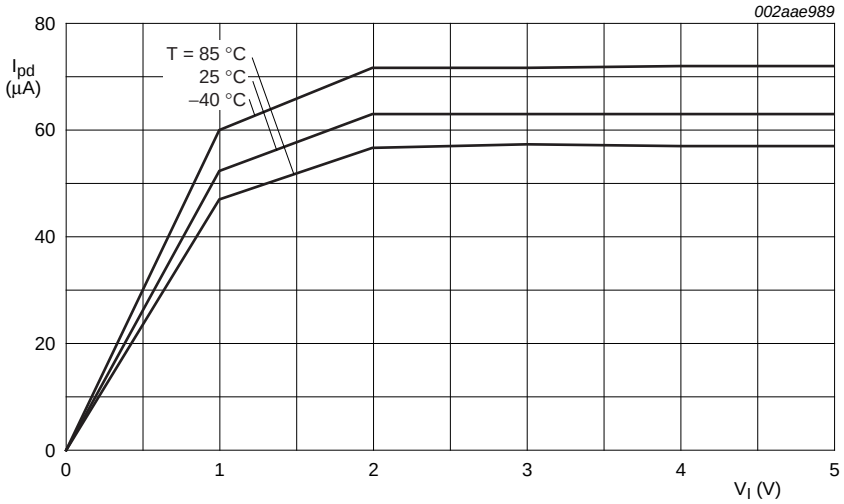

Conditions: V_{DD} = 3.3 V; standard port pins.

Fig 14. Typical pull-down current I_{pd} versus input voltage V_I

All information provided in this document is subject to legal disclaimers.

© NXP B.V. 2013. All rights reserved.

10. Dynamic characteristics

10.1 Power-up ramp conditions

Table 8. Power-up characteristics

T_{amb} = −40 °C to +85 °C.

Symbol	Parameter	Conditions		Min	Typ	Max	Unit
t_r	rise time	at t = t_1: 0 < V_I ≤ 400 mV	[1]	0	-	500	ms
t_{wait}	wait time		[1][2]	12	-	-	µs
V_I	input voltage	at t = t_1 on pin V_{DD}		0	-	400	mV

[1] See Figure 15.

[2] The wait time specifies the time the power supply must be at levels below 400 mV before ramping up.

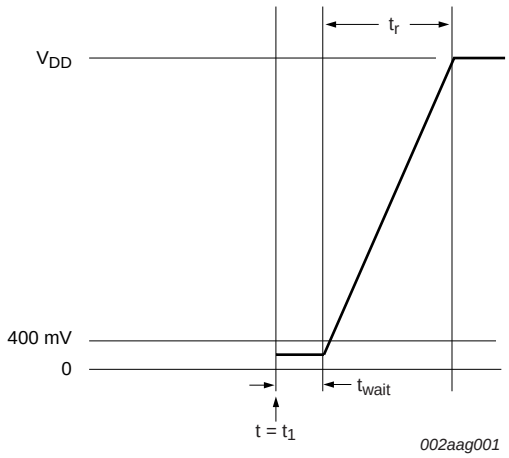

Condition: 0 < V_I ≤ 400 mV at start of power-up (t = t_1)

Fig 15. Power-up ramp

10.2 Flash memory

Table 9. Flash characteristics

T_{amb} = −40 °C to +85 °C, unless otherwise specified.

Symbol	Parameter	Conditions		Min	Typ	Max	Unit
N_{endu}	endurance		[1]	10000	100 000	-	cycles
t_{ret}	retention time	powered		10	-	-	years
		unpowered		20	-	-	years
t_{er}	erase time	sector or multiple consecutive sectors		95	100	105	ms
t_{prog}	programming time		[2]	0.95	1	1.05	ms

[1] Number of program/erase cycles.

[2] Programming times are given for writing 256 bytes from RAM to the flash. Data must be written to the flash in blocks of 256 bytes.

All information provided in this document is subject to legal disclaimers.

© NXP B.V. 2013. All rights reserved.

10.3 External clock

Table 10. Dynamic characteristic: external clock

T_{amb} = −40 °C to +85 °C; V_{DD} over specified ranges.[1]

Symbol	Parameter	Conditions	Min	Typ[2]	Max	Unit
f_{osc}	oscillator frequency		1	-	25	MHz
$T_{cy(clk)}$	clock cycle time		40	-	1000	ns
t_{CHCX}	clock HIGH time		$T_{cy(clk)} \times 0.4$	-	-	ns
t_{CLCX}	clock LOW time		$T_{cy(clk)} \times 0.4$	-	-	ns
t_{CLCH}	clock rise time		-	-	5	ns
t_{CHCL}	clock fall time		-	-	5	ns

[1] Parameters are valid over operating temperature range unless otherwise specified.

[2] Typical ratings are not guaranteed. The values listed are at room temperature (25 °C), nominal supply voltages.

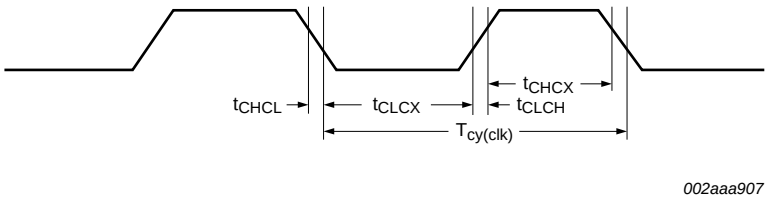

Fig 16. External clock timing (with an amplitude of at least $V_{i(RMS)}$ = 200 mV)

All information provided in this document is subject to legal disclaimers.

© NXP B.V. 2013. All rights reserved.

10.4 Internal oscillators

Table 11. Dynamic characteristic: internal oscillators

T_{amb} = −40 °C to +85 °C; 2.7 V ≤ V_{DD} ≤ 3.6 V.[1]

Symbol	Parameter	Conditions	Min	Typ[2]	Max	Unit
$f_{osc(RC)}$	internal RC oscillator frequency	-	11.88	12	12.12	MHz

[1] Parameters are valid over operating temperature range unless otherwise specified.

[2] Typical ratings are not guaranteed. The values listed are at room temperature (25 °C), nominal supply voltages.

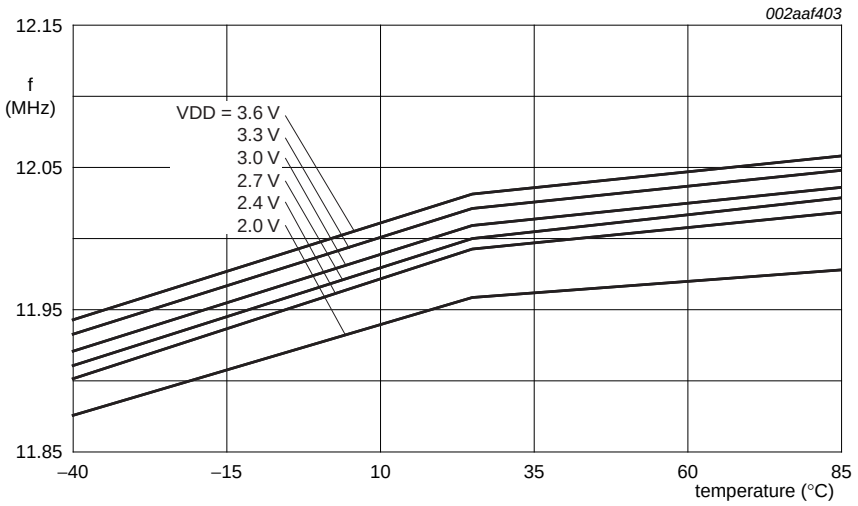

Conditions: Frequency values are typical values. 12 MHz ± 1 % accuracy is guaranteed for 2.7 V ≤ V_{DD} ≤ 3.6 V and T_{amb} = −40 °C to +85 °C. Variations between parts may cause the IRC to fall outside the 12 MHz ± 1 % accuracy specification for voltages below 2.7 V.

Fig 17. Internal RC oscillator frequency versus temperature

Table 12. Dynamic characteristics: Watchdog oscillator

Symbol	Parameter	Conditions		Min	Typ[1]	Max	Unit
$f_{osc(int)}$	internal oscillator frequency	DIVSEL = 0x1F, FREQSEL = 0x1 in the WDTOSCCTRL register;	[2][3]	-	9.4	-	kHz
		DIVSEL = 0x00, FREQSEL = 0xF in the WDTOSCCTRL register	[2][3]	-	2300	-	kHz

[1] Typical ratings are not guaranteed. The values listed are at room temperature (25 °C), nominal supply voltages.

[2] The typical frequency spread over processing and temperature (T_{amb} = −40 °C to +85 °C) is ±40 %.

[3] See *user manual UM10429*.

All information provided in this document is subject to legal disclaimers.

© NXP B.V. 2013. All rights reserved.

10.5 I/O pins

Table 13. Dynamic characteristic: I/O pins[1]
T_{amb} = −40 °C to +85 °C; 3.0 V ≤ V_{DD} ≤ 3.6 V.

Symbol	Parameter	Conditions	Min	Typ	Max	Unit
t_r	rise time	pin configured as output	3.0	-	5.0	ns
t_f	fall time	pin configured as output	2.5	-	5.0	ns

[1] Applies to standard port pins and $\overline{\text{RESET}}$ pin.

10.6 SPI interfaces

Table 14. Dynamic characteristics of SPI pins in SPI mode

Symbol	Parameter	Conditions		Min	Typ	Max	Unit
SPI master (in SPI mode)							
$T_{cy(clk)}$	clock cycle time	when only receiving	[1]	50	-	-	ns
		when only transmitting	[1]	40			ns
t_{DS}	data set-up time	in SPI mode	[2]	15	-	-	ns
		2.4 V ≤ V_{DD} ≤ 3.6 V					
		2.0 V ≤ V_{DD} < 2.4 V	[2]	20			ns
		1.8 V ≤ V_{DD} < 2.0 V	[2]	24	-	-	ns
t_{DH}	data hold time	in SPI mode	[2]	0	-	-	ns
$t_{v(Q)}$	data output valid time	in SPI mode	[2]	-	-	10	ns
$t_{h(Q)}$	data output hold time	in SPI mode	[2]	0	-	-	ns
SPI slave (in SPI mode)							
$T_{cy(PCLK)}$	PCLK cycle time			20	-	-	ns
t_{DS}	data set-up time	in SPI mode	[3][4]	0	-	-	ns
t_{DH}	data hold time	in SPI mode	[3][4]	$3 \times T_{cy(PCLK)} + 4$	-	-	ns
$t_{v(Q)}$	data output valid time	in SPI mode	[3][4]	-	-	$3 \times T_{cy(PCLK)} + 11$	ns
$t_{h(Q)}$	data output hold time	in SPI mode	[3][4]	-	-	$2 \times T_{cy(PCLK)} + 5$	ns

[1] $T_{cy(clk)} = (SSPCLKDIV \times (1 + SCR) \times CPSDVSR) / f_{main}$. The clock cycle time derived from the SPI bit rate $T_{cy(clk)}$ is a function of the main clock frequency f_{main}, the SPI peripheral clock divider (SSPCLKDIV), the SPI SCR parameter (specified in the SSP0CR0 register), and the SPI CPSDVSR parameter (specified in the SPI clock prescale register).

[2] T_{amb} = −40 °C to 85 °C.

[3] $T_{cy(clk)} = 12 \times T_{cy(PCLK)}$.

[4] T_{amb} = 25 °C; for normal voltage supply range: V_{DD} = 3.3 V.

All information provided in this document is subject to legal disclaimers.

© NXP B.V. 2013. All rights reserved.

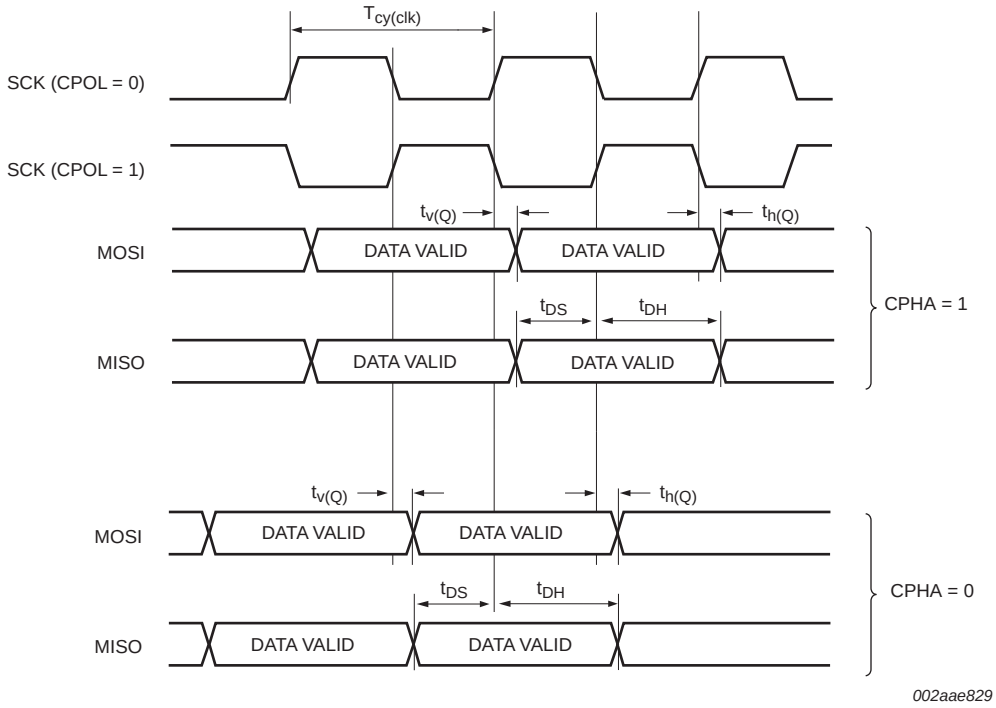

Fig 18. SPI master timing in SPI mode

All information provided in this document is subject to legal disclaimers.

© NXP B.V. 2013. All rights reserved.

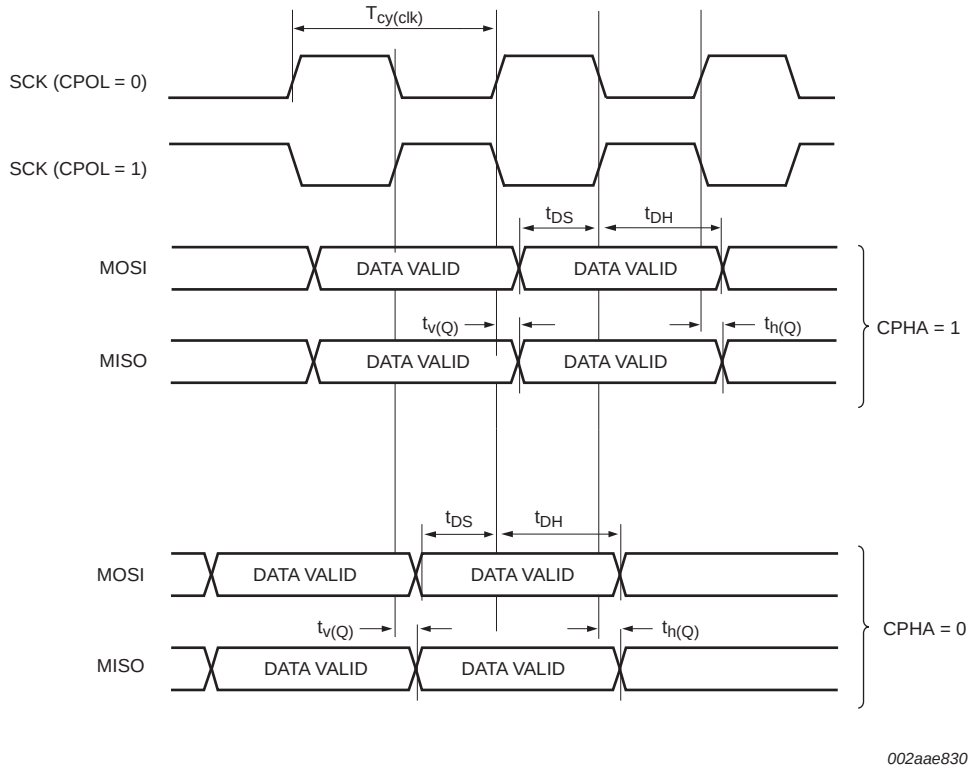

Fig 19. SPI slave timing in SPI mode

All information provided in this document is subject to legal disclaimers.

© NXP B.V. 2013. All rights reserved.

11. Application information

11.1 ADC usage notes

The following guidelines show how to increase the performance of the ADC in a noisy environment beyond the ADC specifications listed in Table 6:

- The ADC input trace must be short and as close as possible to the LPC1102/1104 chip.
- The ADC input traces must be shielded from fast switching digital signals and noisy power supply lines.
- Because the ADC and the digital core share the same power supply, the power supply line must be adequately filtered.
- To improve the ADC performance in a very noisy environment, put the device in Sleep mode during the ADC conversion.

11.2 XTAL input

The input voltage to the on-chip oscillators is limited to 1.8 V. If the oscillator is driven by a clock in slave mode, it is recommended that the input be coupled through a capacitor with C_i = 100 pF. To limit the input voltage to the specified range, choose an additional capacitor to ground C_g which attenuates the input voltage by a factor $C_i/(C_i + C_g)$. In slave mode, a minimum of 200 mV (RMS) is needed.

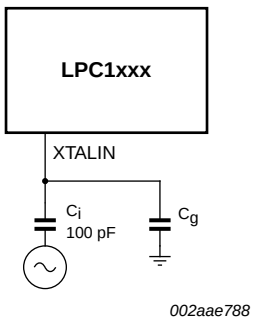

Fig 20. Slave mode operation of the on-chip oscillator

In slave mode the input clock signal should be coupled by means of a capacitor of 100 pF (Figure 20), with an amplitude between 200 mV (RMS) and 1000 mV (RMS). This corresponds to a square wave signal with a signal swing of between 280 mV and 1.4 V.

11.3 Standard I/O pad configuration

Figure 21 shows the possible pin modes for standard I/O pins with analog input function:

- Digital output driver
- Digital input: Pull-up enabled/disabled
- Digital input: Pull-down enabled/disabled
- Digital input: Repeater mode enabled/disabled
- Analog input

All information provided in this document is subject to legal disclaimers.

© NXP B.V. 2013. All rights reserved.

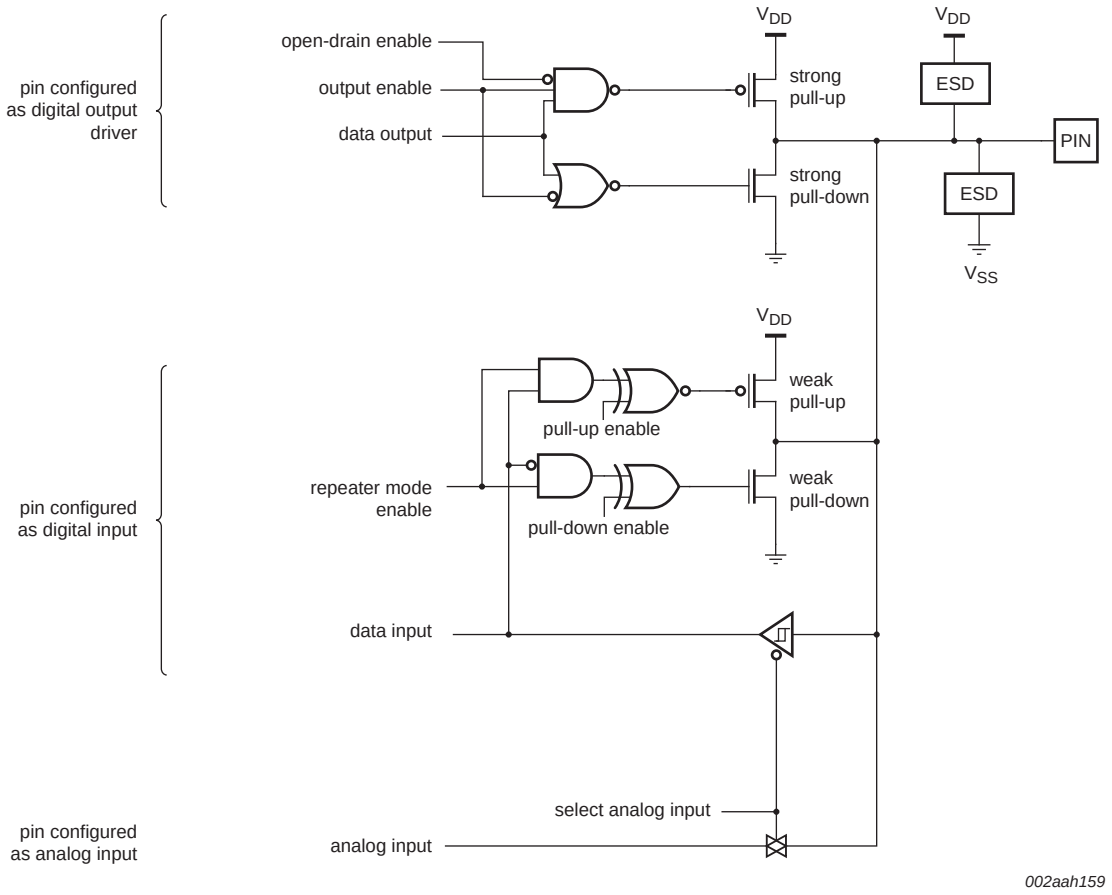

Fig 21. Standard I/O pad configuration

11.4 Reset pad configuration

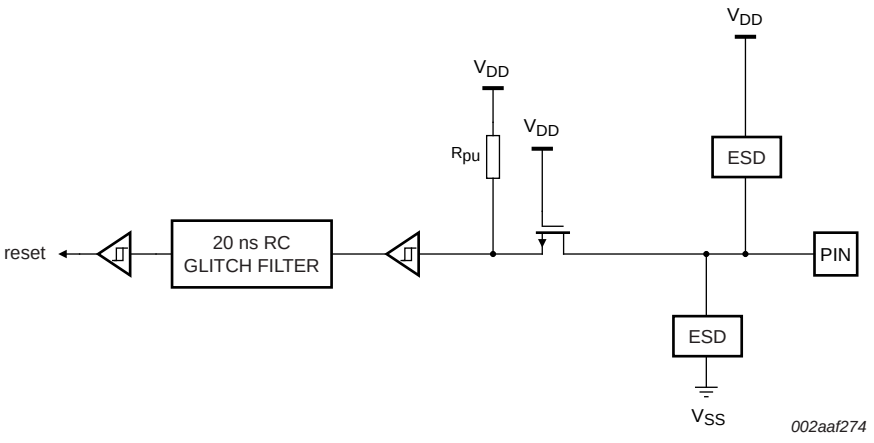

Fig 22. Reset pad configuration

All information provided in this document is subject to legal disclaimers.

© NXP B.V. 2013. All rights reserved.

11.5 ADC effective input impedance

A simplified diagram of the ADC input channels can be used to determine the effective input impedance seen from an external voltage source. See Figure 23.

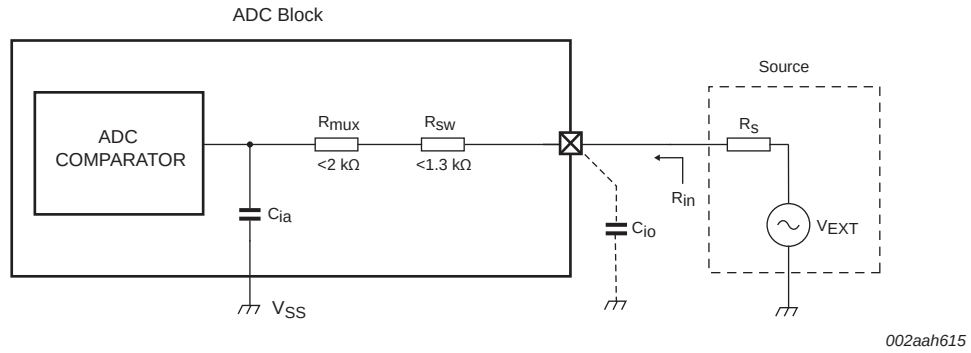

Fig 23. ADC input channel

The effective input impedance, R_{in}, seen by the external voltage source, V_{EXT}, is the parallel impedance of $((1/f_s \times C_{ia}) + R_{mux} + R_{sw})$ and $(1/f_s \times C_{io})$, and can be calculated using Equation 1 with

f_s = sampling frequency

C_{ia} = ADC analog input capacitance

R_{mux} = analog mux resistance

R_{sw} = switch resistance

C_{io} = pin capacitance

$$R_{in} = \left(\frac{1}{f_s \times C_{ia}} + R_{mux} + R_{sw}\right) \| \left(\frac{1}{f_s \times C_{io}}\right) \quad (1)$$

Under nominal operating condition V_{DD} = 3.3 V and with the maximum sampling frequency fs = 400 kHz, the parameters assume the following values:

C_{ia} = 1 pF (max)

R_{mux} = 2 kΩ (max)

R_{sw} = 1.3 kΩ (max)

C_{io} = 7.1 pF (max)

The effective input impedance with these parameters is R_{in} = 308 kΩ.

All information provided in this document is subject to legal disclaimers.

© NXP B.V. 2013. All rights reserved.

12. Package outline

WLCSP16: wafer level chip-size package; 16 bumps; body 2.17 x 2.32 x 0.6 mm **LPC1102UK**

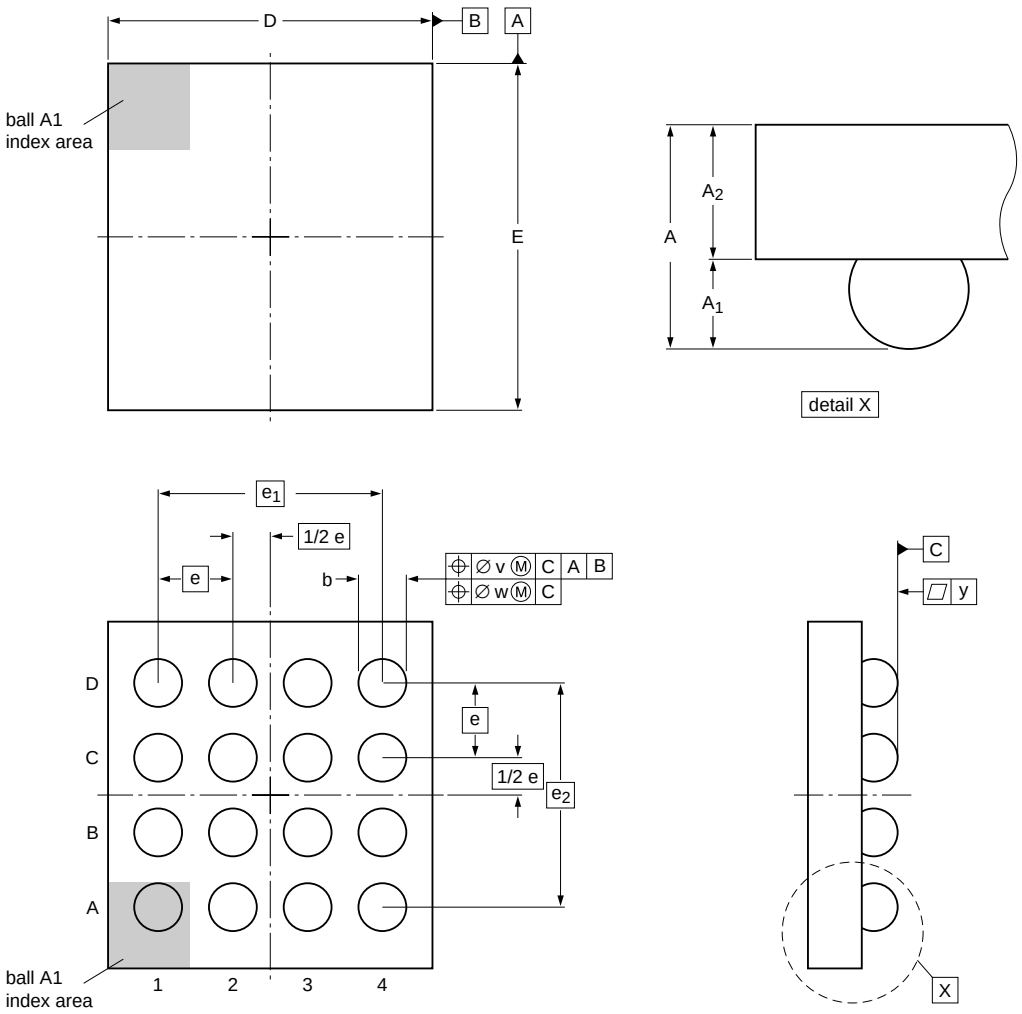

Dimensions

Unit		A	A_1	A_2	b	D	E	e	e_1	e_2	v	w	y
mm	max	0.65	0.27	0.38	0.35	2.21	2.36	0.5	1.5	1.5	0.15	0.05	0.05
	nom	0.60	0.24	0.36	0.32	2.17	2.32						
	min	0.55	0.21	0.34	0.29	2.13	2.28						

lpc1102uk_po

Outline version	References				European projection	Issue date
	IEC	JEDEC	JEITA			
LPC1102UK	- - -	- - -	- - -			~~10-10-15~~ 10-10-18

Fig 24. Package outline LPC1102UK (WLCSP16)

All information provided in this document is subject to legal disclaimers.

© NXP B.V. 2013. All rights reserved.

13. Abbreviations

Table 15. Abbreviations

Acronym	Description
ADC	Analog-to-Digital Converter
AHB	Advanced High-performance Bus
APB	Advanced Peripheral Bus
BOD	BrownOut Detection
GPIO	General Purpose Input/Output
PLL	Phase-Locked Loop
RC	Resistor-Capacitor
SPI	Serial Peripheral Interface
SSI	Serial Synchronous Interface
SSP	Synchronous Serial Port
UART	Universal Asynchronous Receiver/Transmitter

All information provided in this document is subject to legal disclaimers.

© NXP B.V. 2013. All rights reserved.

14. Revision history

Table 16. Revision history

Document ID	Release date	Data sheet status	Change notice	Supersedes
LPC1102_1104 v.7	20130926	Product data sheet	-	LPC1102_1104 v.6
Modifications:	• Parameter V_I updated in Table 4 and Table 5. Condition V_{DD} = 0 added. • Section 11.5 “ADC effective input impedance” added. • Removed $t_{clk(H)}$ and $t_{clk(L)}$ from Figure 18 “SPI master timing in SPI mode” and Figure 19 “SPI slave timing in SPI mode”; spec not characterized.			
LPC1102_1104 v.6	20121231	Product data sheet	-	LPC1102_1104 v.5
Modifications:	• Added Section 9.3 “CoreMark data”. • Conditions for power consumption in Deep-sleep mode updated in Table 5, Table note 8 and Section 9.2. • Table 4 “Limiting values” expanded for clarity. • BOD reset level 0 added in Table 7.			
LPC1102_1104 v.5	20120727	Product data sheet	-	LPC1102 v.4
Modifications:	• Added LPC1104UK. • Removed footnote “The peak current is limited to 25 times the corresponding maximum current.” from Table 4. • For parameters I_{OL}, V_{OL}, I_{OH}, V_{OH}, changed conditions to 1.8 V ≤ V_{DD} < 2.5 V and 2.5 V ≤ V_{DD} ≤ 3.6 V in Table 5). • WDOSc frequency range corrected. • BOD level 0 removed in Table 7.			
LPC1102 v.4	20110624	Product data sheet	-	LPC1102 v.3
Modifications:	• ADC sampling frequency corrected in Table 6 (Table note 7). • Parameter $T_{cy(clk)}$ corrected on Table 14. • Windowed WDT features added (Section 7.13). • Programmable open-drain mode added to GPIO pins (Section 7.7). • Pull-up level specified in Table 3, Table note 1 and Section 7.7. • Condition for parameter T_{stg} in Table 4 updated. • Table note 4 of Table 4 updated.			
LPC1102 v.3	20110418	Product data sheet	-	LPC1102 v.2
Modifications:	• Changed data sheet status to Product. • Power consumption data added (see Figure 6 to Figure 9). • Section 10.1 “Power-up ramp conditions” added. • Reset pad description updated (5 V tolerant) in Table 3. • IRC frequency data added (see Figure 16 “Internal RC oscillator frequency versus temperature”. • Clock output removed from feature list.			
LPC1102 v.2	20101126	Preliminary data sheet	-	LPC1102 v.1
Modifications:	• Changed data sheet status to Preliminary.			
LPC1102 v.1	20101116	Objective data sheet	-	-

All information provided in this document is subject to legal disclaimers.

© NXP B.V. 2013. All rights reserved.

15. Legal information

15.1 Data sheet status

Document status[1][2]	Product status[3]	Definition
Objective [short] data sheet	Development	This document contains data from the objective specification for product development.
Preliminary [short] data sheet	Qualification	This document contains data from the preliminary specification.
Product [short] data sheet	Production	This document contains the product specification.

[1] Please consult the most recently issued document before initiating or completing a design.

[2] The term 'short data sheet' is explained in section "Definitions".

[3] The product status of device(s) described in this document may have changed since this document was published and may differ in case of multiple devices. The latest product status information is available on the Internet at URL http://www.nxp.com.

15.2 Definitions

Draft — The document is a draft version only. The content is still under internal review and subject to formal approval, which may result in modifications or additions. NXP Semiconductors does not give any representations or warranties as to the accuracy or completeness of information included herein and shall have no liability for the consequences of use of such information.

Short data sheet — A short data sheet is an extract from a full data sheet with the same product type number(s) and title. A short data sheet is intended for quick reference only and should not be relied upon to contain detailed and full information. For detailed and full information see the relevant full data sheet, which is available on request via the local NXP Semiconductors sales office. In case of any inconsistency or conflict with the short data sheet, the full data sheet shall prevail.

Product specification — The information and data provided in a Product data sheet shall define the specification of the product as agreed between NXP Semiconductors and its customer, unless NXP Semiconductors and customer have explicitly agreed otherwise in writing. In no event however, shall an agreement be valid in which the NXP Semiconductors product is deemed to offer functions and qualities beyond those described in the Product data sheet.

15.3 Disclaimers

Limited warranty and liability — Information in this document is believed to be accurate and reliable. However, NXP Semiconductors does not give any representations or warranties, expressed or implied, as to the accuracy or completeness of such information and shall have no liability for the consequences of use of such information. NXP Semiconductors takes no responsibility for the content in this document if provided by an information source outside of NXP Semiconductors.

In no event shall NXP Semiconductors be liable for any indirect, incidental, punitive, special or consequential damages (including - without limitation - lost profits, lost savings, business interruption, costs related to the removal or replacement of any products or rework charges) whether or not such damages are based on tort (including negligence), warranty, breach of contract or any other legal theory.

Notwithstanding any damages that customer might incur for any reason whatsoever, NXP Semiconductors' aggregate and cumulative liability towards customer for the products described herein shall be limited in accordance with the *Terms and conditions of commercial sale* of NXP Semiconductors.

Right to make changes — NXP Semiconductors reserves the right to make changes to information published in this document, including without limitation specifications and product descriptions, at any time and without notice. This document supersedes and replaces all information supplied prior to the publication hereof.

Suitability for use — NXP Semiconductors products are not designed, authorized or warranted to be suitable for use in life support, life-critical or safety-critical systems or equipment, nor in applications where failure or malfunction of an NXP Semiconductors product can reasonably be expected to result in personal injury, death or severe property or environmental damage. NXP Semiconductors and its suppliers accept no liability for inclusion and/or use of NXP Semiconductors products in such equipment or applications and therefore such inclusion and/or use is at the customer's own risk.

Applications — Applications that are described herein for any of these products are for illustrative purposes only. NXP Semiconductors makes no representation or warranty that such applications will be suitable for the specified use without further testing or modification.

Customers are responsible for the design and operation of their applications and products using NXP Semiconductors products, and NXP Semiconductors accepts no liability for any assistance with applications or customer product design. It is customer's sole responsibility to determine whether the NXP Semiconductors product is suitable and fit for the customer's applications and products planned, as well as for the planned application and use of customer's third party customer(s). Customers should provide appropriate design and operating safeguards to minimize the risks associated with their applications and products.

NXP Semiconductors does not accept any liability related to any default, damage, costs or problem which is based on any weakness or default in the customer's applications or products, or the application or use by customer's third party customer(s). Customer is responsible for doing all necessary testing for the customer's applications and products using NXP Semiconductors products in order to avoid a default of the applications and the products or of the application or use by customer's third party customer(s). NXP does not accept any liability in this respect.

Limiting values — Stress above one or more limiting values (as defined in the Absolute Maximum Ratings System of IEC 60134) will cause permanent damage to the device. Limiting values are stress ratings only and (proper) operation of the device at these or any other conditions above those given in the Recommended operating conditions section (if present) or the Characteristics sections of this document is not warranted. Constant or repeated exposure to limiting values will permanently and irreversibly affect the quality and reliability of the device.

Terms and conditions of commercial sale — NXP Semiconductors products are sold subject to the general terms and conditions of commercial sale, as published at http://www.nxp.com/profile/terms, unless otherwise agreed in a valid written individual agreement. In case an individual agreement is concluded only the terms and conditions of the respective agreement shall apply. NXP Semiconductors hereby expressly objects to applying the customer's general terms and conditions with regard to the purchase of NXP Semiconductors products by customer.

No offer to sell or license — Nothing in this document may be interpreted or construed as an offer to sell products that is open for acceptance or the grant, conveyance or implication of any license under any copyrights, patents or other industrial or intellectual property rights.

All information provided in this document is subject to legal disclaimers.

© NXP B.V. 2013. All rights reserved.

Export control — This document as well as the item(s) described herein may be subject to export control regulations. Export might require a prior authorization from competent authorities.

Non-automotive qualified products — Unless this data sheet expressly states that this specific NXP Semiconductors product is automotive qualified, the product is not suitable for automotive use. It is neither qualified nor tested in accordance with automotive testing or application requirements. NXP Semiconductors accepts no liability for inclusion and/or use of non-automotive qualified products in automotive equipment or applications.

In the event that customer uses the product for design-in and use in automotive applications to automotive specifications and standards, customer (a) shall use the product without NXP Semiconductors' warranty of the product for such automotive applications, use and specifications, and (b) whenever customer uses the product for automotive applications beyond NXP Semiconductors' specifications such use shall be solely at customer's own risk, and (c) customer fully indemnifies NXP Semiconductors for any liability, damages or failed product claims resulting from customer design and use of the product for automotive applications beyond NXP Semiconductors' standard warranty and NXP Semiconductors' product specifications.

15.4 Trademarks

Notice: All referenced brands, product names, service names and trademarks are the property of their respective owners.

16. Contact information

For more information, please visit: **http://www.nxp.com**

For sales office addresses, please send an email to: **salesaddresses@nxp.com**

All information provided in this document is subject to legal disclaimers.

© NXP B.V. 2013. All rights reserved.

17. Contents

1 General description 1
2 Features and benefits 1
3 Applications 2
4 Ordering information 3
4.1 Ordering options 3
5 Block diagram 4
6 Pinning information 5
6.1 Pinning 5
6.2 Pin description 6
7 Functional description 8
7.1 ARM Cortex-M0 processor 8
7.2 On-chip flash program memory 8
7.3 On-chip SRAM 8
7.4 Memory map 8
7.5 Nested Vectored Interrupt Controller (NVIC) . . 9
7.5.1 Features 9
7.5.2 Interrupt sources 10
7.6 IOCONFIG block 10
7.7 Fast general purpose parallel I/O 10
7.7.1 Features 10
7.8 UART 10
7.8.1 Features 11
7.9 SPI serial I/O controller 11
7.9.1 Features 11
7.10 10-bit ADC 11
7.10.1 Features 11
7.11 General purpose external event counter/timers 12
7.11.1 Features 12
7.12 System tick timer 12
7.13 Windowed WatchDog Timer 12
7.13.1 Features 12
7.14 Clocking and power control 13
7.14.1 Crystal oscillators 13
7.14.1.1 Internal RC oscillator 14
7.14.1.2 Watchdog oscillator 14
7.14.2 System PLL 14
7.14.3 Clock output (LPC1104 only) 15
7.14.4 Wake-up process 15
7.14.5 Power control 15
7.14.5.1 Power profiles 15
7.14.5.2 Sleep mode 15
7.14.5.3 Deep-sleep mode 16
7.15 System control 16
7.15.1 Start logic 16
7.15.2 Reset 16
7.15.3 Brownout detection 16
7.15.4 Code security (Code Read Protection - CRP) 17
7.15.5 APB interface 17
7.15.6 AHBLite 17
7.15.7 External interrupt inputs 17
7.16 Emulation and debugging 17
8 Limiting values 18
9 Static characteristics 19
9.1 BOD static characteristics 23
9.2 Power consumption 23
9.3 CoreMark data 26
9.4 Electrical pin characteristics 26
10 Dynamic characteristics 29
10.1 Power-up ramp conditions 29
10.2 Flash memory 29
10.3 External clock 30
10.4 Internal oscillators 31
10.5 I/O pins 32
10.6 SPI interfaces 32
11 Application information 35
11.1 ADC usage notes 35
11.2 XTAL input 35
11.3 Standard I/O pad configuration 35
11.4 Reset pad configuration 36
11.5 ADC effective input impedance 37
12 Package outline 38
13 Abbreviations 39
14 Revision history 40
15 Legal information 41
15.1 Data sheet status 41
15.2 Definitions 41
15.3 Disclaimers 41
15.4 Trademarks 42
16 Contact information 42
17 Contents 43

Please be aware that important notices concerning this document and the product(s) described herein, have been included in section 'Legal information'.

© NXP B.V. 2013. **All rights reserved.**

For more information, please visit: http://www.nxp.com
For sales office addresses, please send an email to: salesaddresses@nxp.com

Date of release: 26 September 2013
Document identifier: LPC1102_1104