LP5907 250-mA, Ultra-Low-Noise, Low-I_Q LDO

1 Features

- Input Voltage Range: 2.2 V to 5.5 V
- Output Voltage Range: 1.2 V to 4.5 V
- Stable With 1-µF Ceramic Input and Output Capacitors
- No Noise Bypass Capacitor Required
- Remote Output Capacitor Placement
- Thermal-Overload and Short-Circuit Protection
- –40°C to 125°C Operating Junction Temperature
- Low Output Voltage Noise: < 6.5 μV_{RMS}
- PSRR: 82 dB at 1 kHz
- Output Voltage Tolerance: ±2%
- Very Low I_Q (Enabled): 12 µA
- Low Dropout: 120 mV (typical)
- Create a Custom Design Using the LP5907 With the WEBENCH® Power Designer

2 Applications

- Mobile Phones, Tablets
- Digital Cameras and Audio Devices
- Portable and Battery-Powered Equipment
- Portable Medical Equipment
- Smart Meters and Field Transmitters
- RF, PLL, VCO, and Clock Power Supplies
- IP Cameras
- Drones

3 Description

The LP5907 is a low-noise LDO that can supply up to 250 mA output current. Designed to meet the requirements of RF and analog circuits, the LP5907 device provides low noise, high PSRR, low quiescent current, and low line or load transient response figures. Using new innovative design techniques, the LP5907 offers class-leading noise performance without a noise bypass capacitor and the ability for remote output capacitor placement.

The device is designed to work with a 1-µF input and a 1-µF output ceramic capacitor (no separate noise bypass capacitor is required).

This device is available with fixed output voltages from 1.2 V to 4.5 V in 25-mV steps. Contact Texas Instruments Sales for specific voltage option needs.

Device Information(1)

PART NUMBER	PACKAGE	BODY SIZE
LP5907	DSBGA (4)	0.675 mm × 0.675 mm (MAX)
	SOT-23 (5)	2.90 mm × 1.60 mm (NOM)
	X2SON (4)	1.00 mm × 1.00 mm (NOM)

(1) For all available packages, see the orderable addendum at the end of the data sheet.

Simplified Schematic

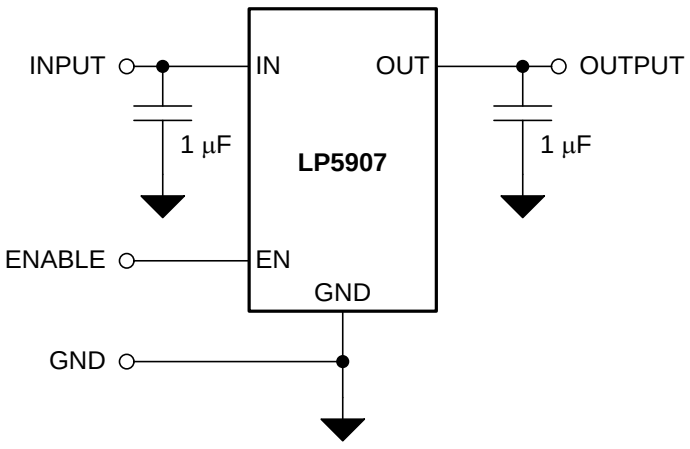

An IMPORTANT NOTICE at the end of this data sheet addresses availability, warranty, changes, use in safety-critical applications, intellectual property matters and other important disclaimers. PRODUCTION DATA.

Table of Contents

1 Features ... 1
2 Applications ... 1
3 Description ... 1
4 Revision History ... 2
5 Pin Configuration and Functions ... 4
6 Specifications ... 5
6.1 Absolute Maximum Ratings ... 5
6.2 ESD Ratings ... 5
6.3 Recommended Operating Conditions ... 5
6.4 Thermal Information ... 6
6.5 Electrical Characteristics ... 6
6.6 Output and Input Capacitors ... 7
6.7 Typical Characteristics ... 8
7 Detailed Description ... 12
7.1 Overview ... 12
7.2 Functional Block Diagram ... 12
7.3 Feature Description ... 12
7.4 Device Functional Modes ... 13
8 Application and Implementation ... 14
8.1 Application Information ... 14
8.2 Typical Application ... 14
9 Power Supply Recommendations ... 17
10 Layout ... 18
10.1 Layout Guidelines ... 18
10.2 Layout Examples ... 18
11 Device and Documentation Support ... 20
11.1 Documentation Support ... 20
11.2 Receiving Notification of Documentation Updates 20
11.3 Community Resources ... 20
11.4 Trademarks ... 20
11.5 Electrostatic Discharge Caution ... 20
11.6 Glossary ... 20
12 Mechanical, Packaging, and Orderable Information ... 21

4 Revision History

NOTE: Page numbers for previous revisions may differ from page numbers in the current version.

Changes from Revision M (January 2018) to Revision N — **Page**

- Added *Overshoot on start-up with EN* row to *Electrical Characteristics* table ... 7

Changes from Revision L (August 2016) to Revision M — **Page**

- Added links for WEBENCH ... 1
- Added information about YKM package option ... 1
- Added minor editorial changes ... 1

Changes from Revision K (May 2016) to Revision L — **Page**

- Changed title of data sheet and updated list of *Applications* and wording of 1st sentence in *Description* ... 1
- Changed "10 μV_{RMS}" to "6.5 μV_{RMS}" ... 1

Changes from Revision J (March 2016) to Revision K — **Page**

- Changed "Linear Regulator" to "LDO" in title and first sentence of Description ... 1

Changes from Revision I (August 2015) to Revision J — **Page**

- Changed V_{OUT} min and max values and V_{EN} min value in Abs Max table and V_{EN} row of ROC table to correct format errors; replace text of footnote 2 of Abs Max table ... 5

Changes from Revision H (November 2014) to Revision I — **Page**

- Added icon for reference design to Top Navs and "ΔV_{OUT} vs Temperature" graph to *Typical Characteristics* ... 1
- Changed Storage Temperature to *Abs Max* table; replace *Handling Ratings* with *ESD Ratings* ... 5
- Deleted "$V_{OUT} \geq 1.8$ V" from first row of ΔVout spec ... 6

Copyright © 2012–2018, Texas Instruments Incorporated

- Added "SOT-23, X2SON packages" to second row of ΔVout spec 6

Changes from Revision G (October 2013) to Revision H **Page**

- Added *Device Information* and *Handling Rating* tables, *Feature Description*, *Device Functional Modes*, *Application and Implementation*, *Power Supply Recommendations*, *Layout*, *Device and Documentation Support*, and *Mechanical, Packaging, and Orderable Information* sections; moved some curves to *Application Curves* section 1

Copyright © 2012–2018, Texas Instruments Incorporated

5 Pin Configuration and Functions

YKE and YKM Packages
4-Pin DSBGA

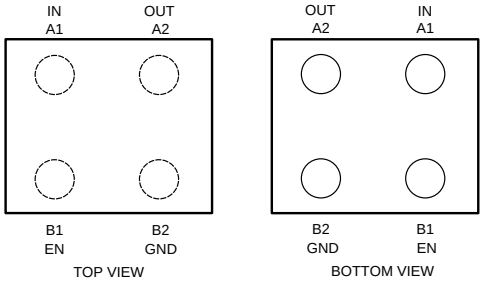

Pin Functions: DSBGA

PIN		I/O	DESCRIPTION
DSBGA NUMBER	NAME		
A1	IN	I	Input voltage supply. Connect a 1-µF capacitor at this input.
A2	OUT	O	Regulated output voltage. Connect a minimum 1-µF low-ESR capacitor to this pin. Connect this output to the load circuit. An internal 230-Ω (typical) pulldown resistor prevents a charge remaining on V_{OUT} when the regulator is in the shutdown mode (V_{EN} low).
B1	EN	I	Enable input. A low voltage (< V_{IL}) on this pin turns the regulator off and discharges the output pin to GND through an internal 230-Ω pulldown resistor. A high voltage (> V_{IH}) on this pin enables the regulator output. This pin has an internal 1-MΩ pulldown resistor to hold the regulator off by default.
B2	GND	—	Common ground

DQN Package
4-Pin X2SON
Bottom View

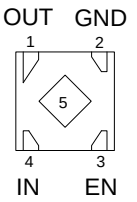

DBV Package
5-Pin SOT-23
Top View

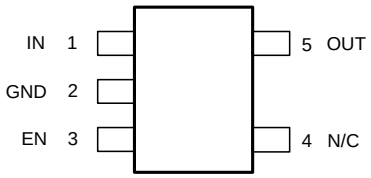

Pin Functions: X2SON, SOT-23

PIN			I/O	DESCRIPTION
NAME	X2SON NUMBER	SOT-23 NUMBER		
IN	4	1	I	Input voltage supply. Connect a 1-µF capacitor at this input.
OUT	1	5	O	Regulated output voltage. Connect a minimum 1-µF low-ESR capacitor to this pin. Connect this output to the load circuit. An internal 230-Ω (typical) pulldown resistor prevents a charge remaining on V_{OUT} when the regulator is in the shutdown mode (V_{EN} low).
EN	3	3	I	Enable input. A low voltage (< V_{IL}) on this pin turns the regulator off and discharges the output pin to GND through an internal 230-Ω pulldown resistor. A high voltage (> V_{IH}) on this pin enables the regulator output. This pin has an internal 1-MΩ pulldown resistor to hold the regulator off by default.
GND	2	2	—	Common ground
N/C	—	4	—	No internal electrical connection.
Thermal Pad	5	—	—	Thermal pad for X2SON package, connect to GND or leave floating. Do not connect to any potential other than GND.

Copyright © 2012–2018, Texas Instruments Incorporated

6 Specifications

6.1 Absolute Maximum Ratings

over operating free-air temperature range (unless otherwise noted)(1)(2)

		MIN	MAX	UNIT
V_{IN}	Input voltage	–0.3	6	V
V_{OUT}	Output voltage	–0.3	See(3)	
V_{EN}	Enable input voltage	–0.3	6	
	Continuous power dissipation(4)	Internally Limited		W
T_{JMAX}	Junction temperature		150	°C
T_{stg}	Storage temperature	–65	150	°C

(1) Stresses beyond those listed under *Absolute Maximum Ratings* may cause permanent damage to the device. These are stress ratings only, and functional operation of the device at these or any other conditions beyond those indicated under *Recommended Operating Conditions* is not implied. Exposure to absolute-maximum-rated conditions for extended periods may affect device reliability.
(2) All voltages are with respect to the GND pin.
(3) Abs Max V_{OUT} is the lessor of V_{IN} + 0.3 V, or 6 V.
(4) Internal thermal shutdown circuitry protects the device from permanent damage.

6.2 ESD Ratings

			VALUE	UNIT
$V_{(ESD)}$	Electrostatic discharge	Human-body model (HBM), per ANSI/ESDA/JEDEC JS-001(1)	±2000	V
		Charged-device model (CDM), per JEDEC specification JESD22-C101(2)	±1000	

(1) JEDEC document JEP155 states that 500-V HBM allows safe manufacturing with a standard ESD control process.
(2) JEDEC document JEP157 states that 250-V CDM allows safe manufacturing with a standard ESD control process.

6.3 Recommended Operating Conditions

over operating free-air temperature range (unless otherwise noted)(1)(2)

		MIN	MAX	UNIT
V_{IN}	Input supply voltage	2.2	5.5	V
V_{EN}	Enable input voltage	0	5.5	
I_{OUT}	Output current	0	250	mA
T_J	Junction temperature	–40	125	°C
T_A	Ambient temperature(3)	–40	85	°C

(1) Stresses beyond those listed under *Absolute Maximum Ratings* may cause permanent damage to the device. These are stress ratings only, and functional operation of the device at these or any other conditions beyond those indicated under *Recommended Operating Conditions* is not implied. Exposure to absolute-maximum-rated conditions for extended periods may affect device reliability.
(2) All voltages are with respect to the GND pin.
(3) In applications where high power dissipation and/or poor package thermal resistance is present, the maximum ambient temperature may have to be derated. Maximum ambient temperature (T_{A-MAX}) is dependent on the maximum operating junction temperature ($T_{J-MAX-OP}$ = 125°C), the maximum power dissipation of the device in the application (P_{D-MAX}), and the junction-to ambient thermal resistance of the part/package in the application ($R_{\theta JA}$), as given by the following equation: $T_{A-MAX} = T_{J-MAX-OP} – (R_{\theta JA} \times P_{D-MAX})$. See *Application and Implementation*.

Copyright © 2012–2018, Texas Instruments Incorporated

6.4 Thermal Information

THERMAL METRIC[1]		LP5907				UNIT
		DBV (SOT-23)	DQN (X2SON)	YKE (DSBGA)	YKM (DSBGA)	
		5 PINS	4 PINS	4 PINS	4 PINS	
$R_{\theta JA}$	Junction-to-ambient thermal resistance	193.4	216.1	206.1	194.1	°C/W
$R_{\theta JC(top)}$	Junction-to-case (top) thermal resistance	102.1	161.7	1.5	3.0	°C/W
$R_{\theta JB}$	Junction-to-board thermal resistance	45.8	162.1	37.0	62.7	°C/W
ψ_{JT}	Junction-to-top characterization parameter	8.4	5.1	15.0	1.1	°C/W
ψ_{JB}	Junction-to-board characterization parameter	45.3	161.7	36.8	62.7	°C/W
$R_{\theta JC(bot)}$	Junction-to-case (bottom) thermal resistance	n/a	123.0	n/a	n/a	°C/W

(1) For more information about traditional and new thermal metrics, see the *Semiconductor and IC Package Thermal Metrics* application report.

6.5 Electrical Characteristics

V_{IN} = $V_{OUT(NOM)}$ + 1 V, V_{EN} = 1.2 V, I_{OUT} = 1 mA, C_{IN} = 1 µF, C_{OUT} = 1 µF (unless otherwise noted)[1][2][3]

PARAMETER		TEST CONDITIONS	MIN	TYP	MAX	UNIT
V_{IN}	Input voltage	T_A = 25°C	2.2		5.5	V
ΔV_{OUT}	Output voltage tolerance	V_{IN} = ($V_{OUT(NOM)}$ + 1 V) to 5.5 V, I_{OUT} = 1 mA to 250 mA	–2		2	%V_{OUT}
		V_{IN} = ($V_{OUT(NOM)}$ + 1 V) to 5.5 V, I_{OUT} = 1 mA to 250 mA (V_{OUT} < 1.8 V, SOT-23, X2SON packages)	–3		3	
	Line regulation	V_{IN} = ($V_{OUT(NOM)}$ + 1 V) to 5.5 V, I_{OUT} = 1 mA		0.02		%/V
	Load regulation	I_{OUT} = 1 mA to 250 mA		0.001		%/mA
I_{LOAD}	Load current	See[4]	0		250	mA
	Maximum output current		250			
I_Q	Quiescent current[5]	V_{EN} = 1.2 V, I_{OUT} = 0 mA		12	25	µA
		V_{EN} = 1.2 V, I_{OUT} = 250 mA		250	425	
		V_{EN} = 0.3 V (disabled)		0.2	1	
I_G	Ground current[6]	V_{EN} = 1.2 V, I_{OUT} = 0 mA		14		µA
V_{DO}	Dropout voltage[7]	I_{OUT} = 100 mA		50		mV
		I_{OUT} = 250 mA (DSBGA package)		120	200	
		I_{OUT} = 250 mA (SOT-23, X2SON packages)			250	
I_{SC}	Short-circuit current limit	T_A = 25°C[8]	250	500		mA

(1) All voltages are with respect to the device GND terminal, unless otherwise stated.
(2) Minimum and maximum limits are ensured through test, design, or statistical correlation over the junction temperature (T_J) range of –40°C to 125°C, unless otherwise stated. Typical values represent the most likely parametric norm at T_A = 25°C, and are provided for reference purposes only.
(3) In applications where high power dissipation and/or poor package thermal resistance is present, the maximum ambient temperature may have to be derated. Maximum ambient temperature (T_{A-MAX}) is dependent on the maximum operating junction temperature ($T_{J-MAX-OP}$ = 125°C), the maximum power dissipation of the device in the application (P_{D-MAX}), and the junction-to ambient thermal resistance of the part/package in the application $R_{\theta JA}$), as given by the following equation: T_{A-MAX} = $T_{J-MAX-OP}$ – ($R_{\theta JA}$ × P_{D-MAX}). See *Application and Implementation*.
(4) The device maintains a stable, regulated output voltage without a load current.
(5) Quiescent current is defined here as the difference in current between the input voltage source and the load at V_{OUT}.
(6) Ground current is defined here as the total current flowing to ground as a result of all input voltages applied to the device.
(7) Dropout voltage is the voltage difference between the input and the output at which the output voltage drops to 100 mV below its nominal value.
(8) Short-circuit current (I_{SC}) for the LP5907 is equivalent to current limit. To minimize thermal effects during testing, I_{SC} is measured with V_{OUT} pulled to 100 mV below its nominal voltage.

Copyright © 2012–2018, Texas Instruments Incorporated

Electrical Characteristics (continued)

V_{IN} = $V_{OUT(NOM)}$ + 1 V, V_{EN} = 1.2 V, I_{OUT} = 1 mA, C_{IN} = 1 µF, C_{OUT} = 1 µF (unless otherwise noted)(1)(2)(3)

PARAMETER		TEST CONDITIONS		MIN	TYP	MAX	UNIT
PSRR	Power-supply rejection ratio(9)	f = 100 Hz, I_{OUT} = 20 mA			90		dB
		f = 1 kHz, I_{OUT} = 20 mA			82		
		f = 10 kHz, I_{OUT} = 20 mA			65		
		f = 100 kHz, I_{OUT} = 20 mA			60		
e_N	Output noise voltage(9)	BW = 10 Hz to 100 kHz	I_{OUT} = 1 mA		10		μV_{RMS}
			I_{OUT} = 250 mA		6.5		
R_{AD}	Output automatic discharge pulldown resistance	V_{EN} < V_{IL} (output disabled)			230		Ω
T_{SD}	Thermal shutdown	T_J rising			160		°C
	Thermal hysteresis	T_J falling from shutdown			15		
LOGIC INPUT THRESHOLDS							
V_{IL}	Low input threshold	V_{IN} = 2.2 V to 5.5 V, V_{EN} falling until the output is disabled				0.4	V
V_{IH}	High input threshold	V_{IN} = 2.2 V to 5.5 V V_{EN} rising until the output is enabled		1.2			V
I_{EN}	Input current at EN pin(10)	V_{EN} = 5.5 V and V_{IN} = 5.5 V			5.5		µA
		V_{EN} = 0 V and V_{IN} = 5.5 V			0.001		
TRANSIENT CHARACTERISTICS							
ΔV_{OUT}	Line transient(9)	V_{IN} = ($V_{OUT(NOM)}$ + 1 V) to ($V_{OUT(NOM)}$) + 1.6 V) in 30 µs		–1			mV
		V_{IN} = ($V_{OUT(NOM)}$ + 1.6 V) to ($V_{OUT(NOM)}$) + 1.6 V) in 30 µs				1	
	Load transient(9)	I_{OUT} = 1 mA to 250 mA in 10 µs		–40			
		I_{OUT} = 250 mA to 1 mA in 10 µs				40	
	Overshoot on start-up(9)	Stated as a percentage of $V_{OUT(NOM)}$				5%	
	Overshoot on start-up with EN(9)	Stated as a percentage of $V_{OUT(NOM)}$, V_{IN} = V_{OUT} + 1 V to 5.5 V, 0.7 µF < C_{OUT} < 10 µF, 0 mA < I_{OUT} < 250 mA, EN rising until the output is enabled				1%	
t_{ON}	Turnon time	From V_{EN} > V_{IH} to V_{OUT} = 95% of $V_{OUT(NOM)}$, T_A = 25°C			80	150	µs

(9) This specification is verified by design.
(10) There is a 1-MΩ resistor between EN and ground on the device.

6.6 Output and Input Capacitors

over operating free-air temperature range (unless otherwise noted)

PARAMETER		TEST CONDITIONS	MIN(1)	TYP	MAX	UNIT
C_{IN}	Input capacitance(2)	Capacitance for stability	0.7	1		µF
C_{OUT}	Output capacitance(2)		0.7	1	10	µF
ESR	Output/Input capacitance(2)		5		500	mΩ

(1) The minimum capacitance should be greater than 0.5 µF over the full range of operating conditions. The capacitor tolerance should be 30% or better over the full temperature range. The full range of operating conditions for the capacitor in the application must be considered during device selection to ensure this minimum capacitance specification is met. X7R capacitors are recommended however capacitor types X5R, Y5V and Z5U may be used with consideration of the application and conditions.
(2) This specification is verified by design.

Copyright © 2012–2018, Texas Instruments Incorporated

6.7 Typical Characteristics

V_{IN} = 3.7 V, V_{OUT} = 2.8 V, I_{OUT} = 1 mA, C_{IN} = 1 µF, C_{OUT} = 1 µF, T_A = 25°C (unless otherwise noted)

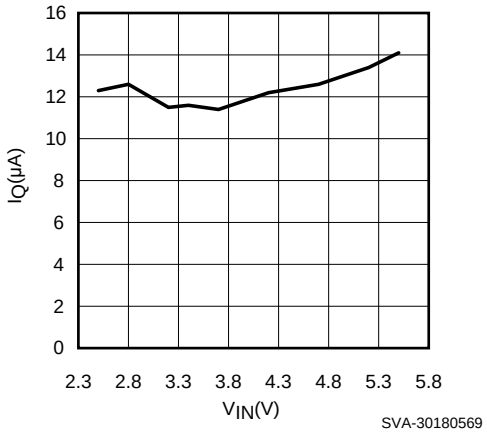

Figure 1. Quiescent Current vs Input Voltage

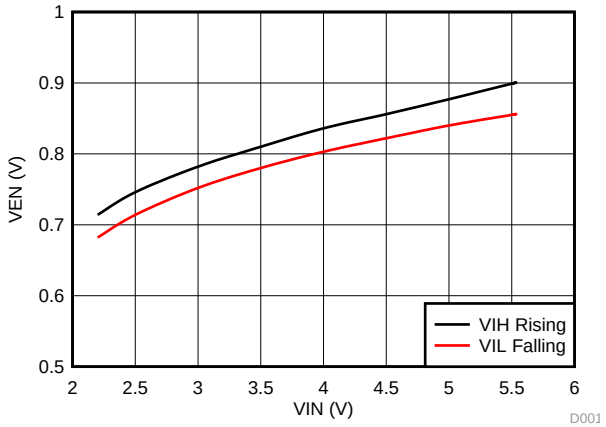

Figure 2. V_{EN} Thresholds vs V_{IN}

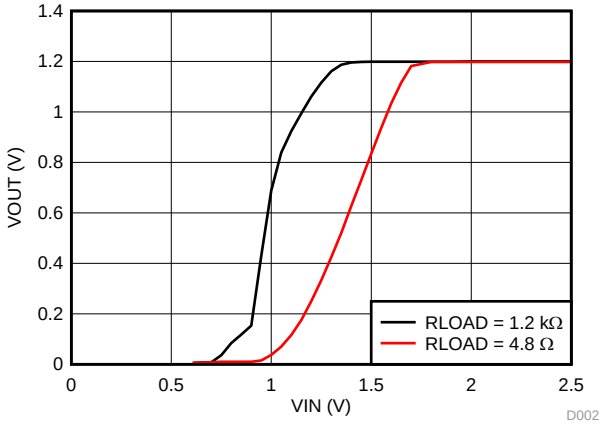

V_{OUT} = 1.2 V, V_{EN} = V_{IN}

Figure 3. V_{OUT} vs V_{IN}

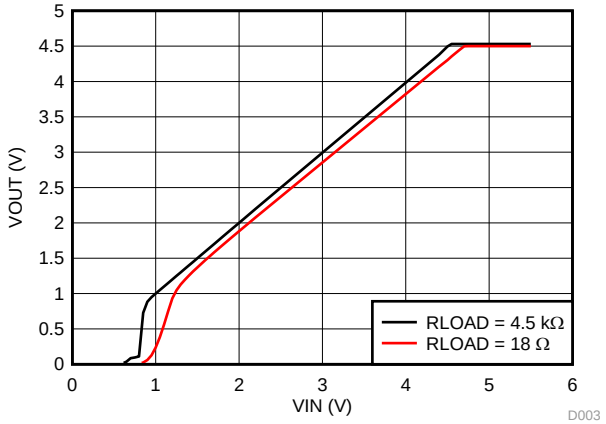

V_{OUT} = 4.5 V, V_{EN} = V_{IN}

Figure 4. V_{OUT} vs V_{IN}

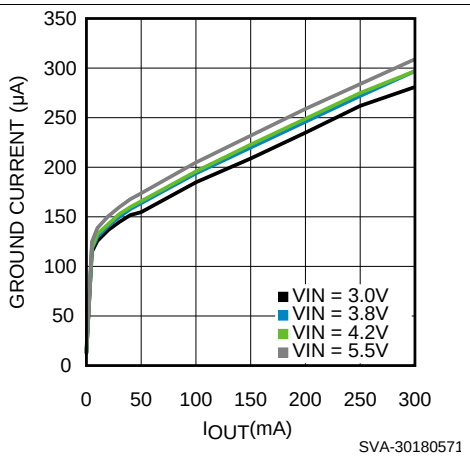

Figure 5. Ground Current vs Output Current

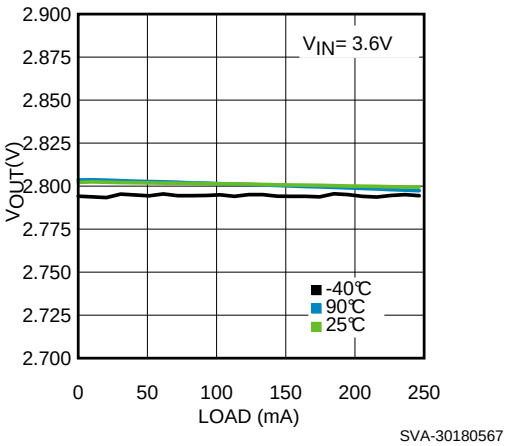

Figure 6. Load Regulation

Copyright © 2012–2018, Texas Instruments Incorporated

Typical Characteristics (continued)

V_{IN} = 3.7 V, V_{OUT} = 2.8 V, I_{OUT} = 1 mA, C_{IN} = 1 µF, C_{OUT} = 1 µF, T_A = 25°C (unless otherwise noted)

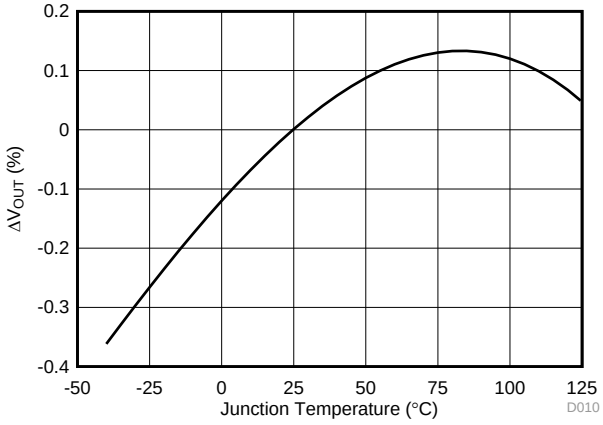

Figure 7. ΔV_{OUT} vs Temperature

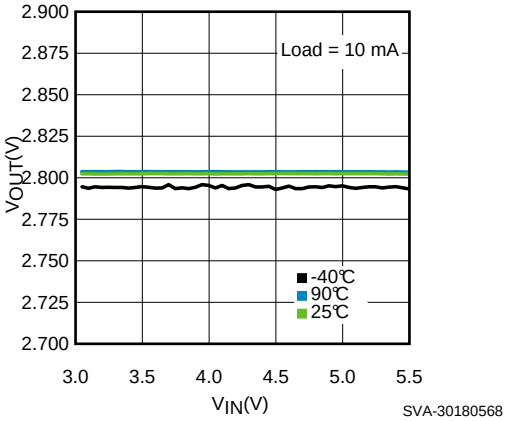

Figure 8. Line Regulation

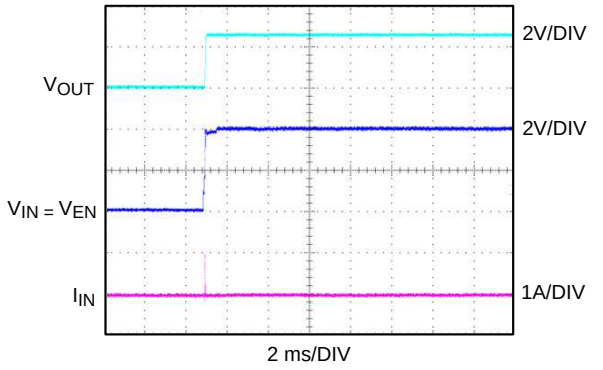

Figure 9. Inrush Current

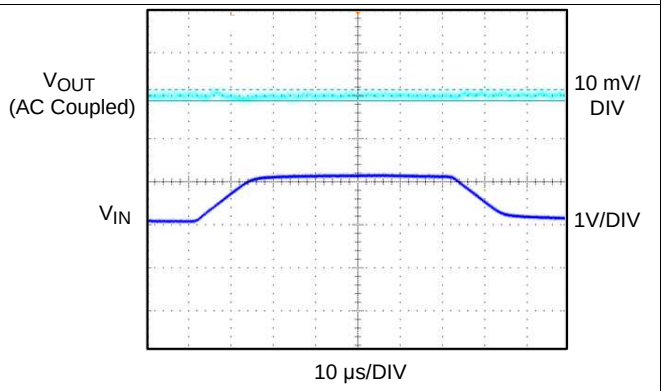

V_{IN} = 3.2 V ↔ 4.2 V, load = 1 mA

Figure 10. Line Transient

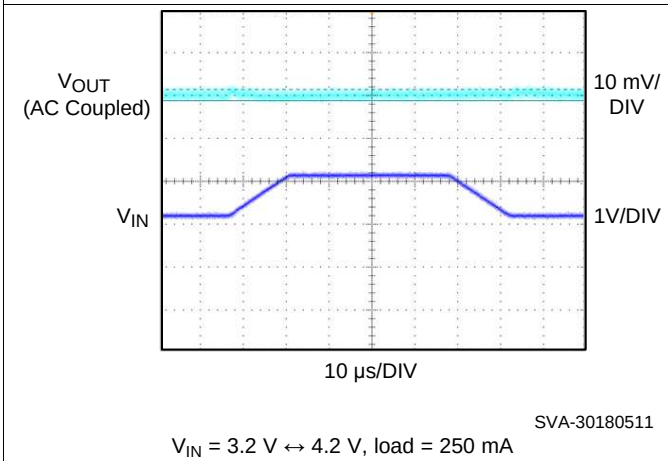

V_{IN} = 3.2 V ↔ 4.2 V, load = 250 mA

Figure 11. Line Transient

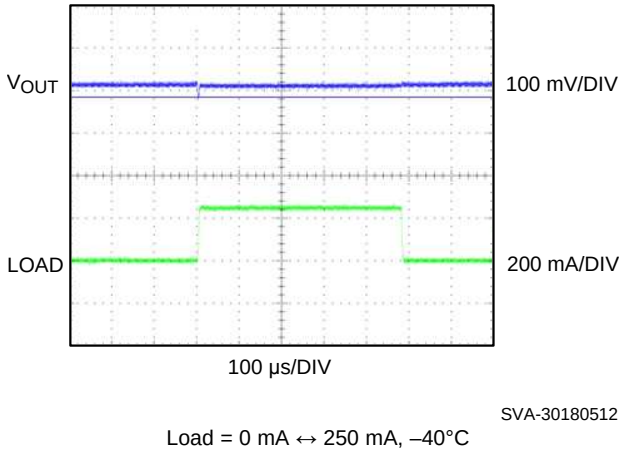

Load = 0 mA ↔ 250 mA, –40°C

Figure 12. Load Transient

Copyright © 2012–2018, Texas Instruments Incorporated

Typical Characteristics (continued)

V_{IN} = 3.7 V, V_{OUT} = 2.8 V, I_{OUT} = 1 mA, C_{IN} = 1 µF, C_{OUT} = 1 µF, T_A = 25°C (unless otherwise noted)

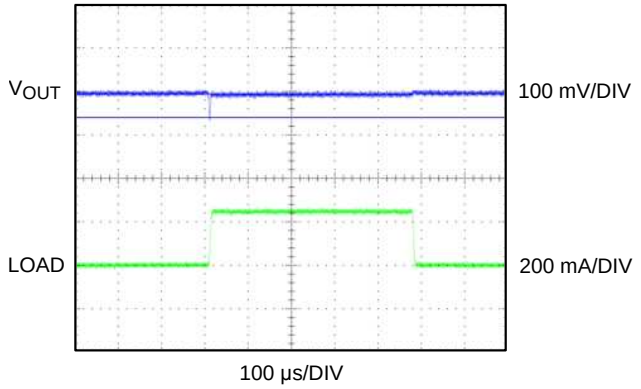

Load = 0 mA ↔ 250 mA, 90°C

Figure 13. Load Transient

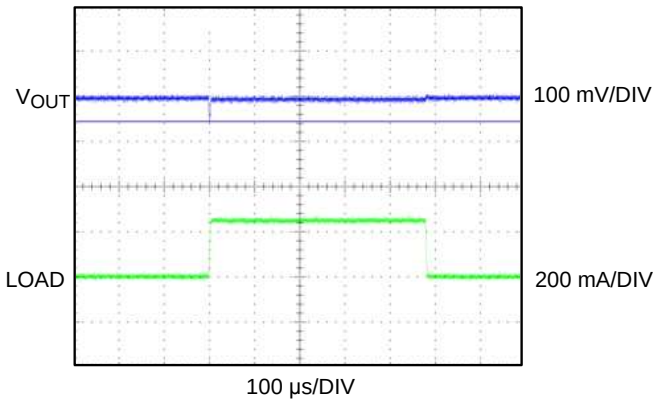

Load = 0 mA ↔ 250 mA, 25°C

Figure 14. Load Transient

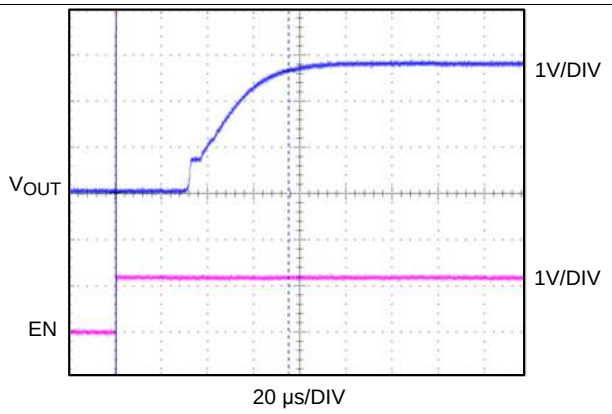

Load = 0 mA

Figure 15. Start-Up

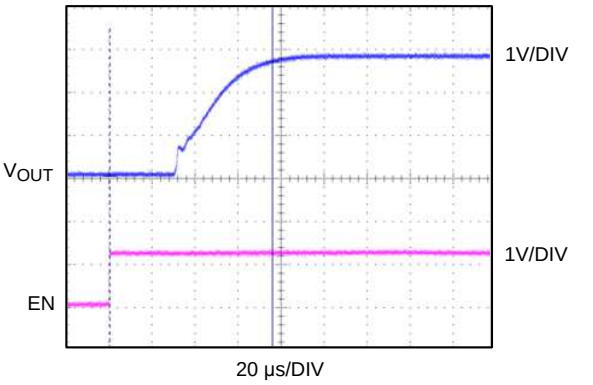

Load = 250 mA

Figure 16. Start-Up

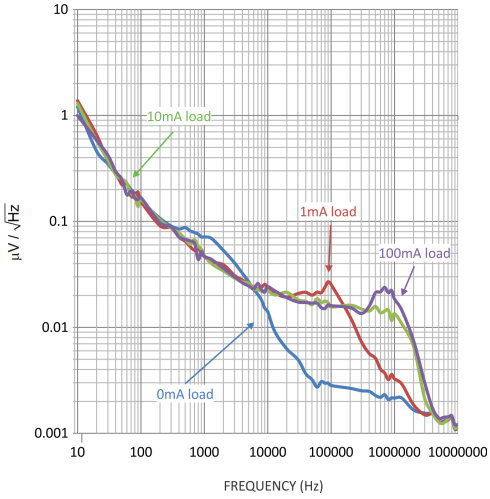

Figure 17. Noise Density Test

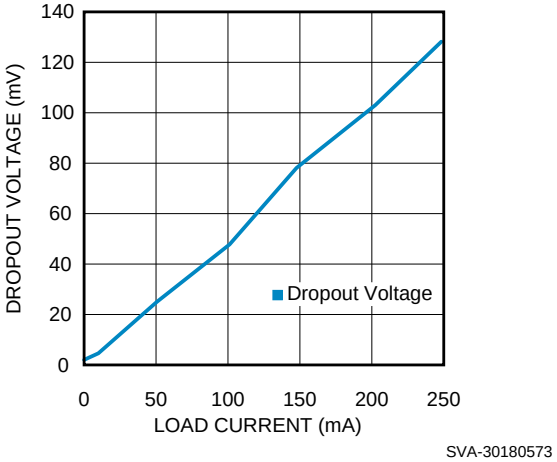

Figure 18. Dropout Voltage vs Load Current

Copyright © 2012–2018, Texas Instruments Incorporated

Typical Characteristics (continued)

V_{IN} = 3.7 V, V_{OUT} = 2.8 V, I_{OUT} = 1 mA, C_{IN} = 1 µF, C_{OUT} = 1 µF, T_A = 25°C (unless otherwise noted)

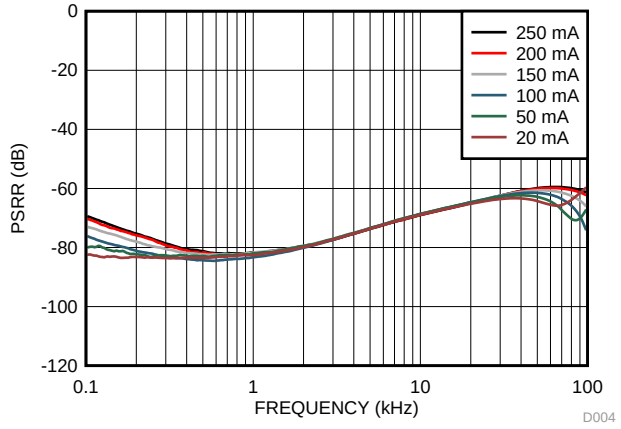

Figure 19. PSRR Loads Averaged 100 Hz to 100 kHz

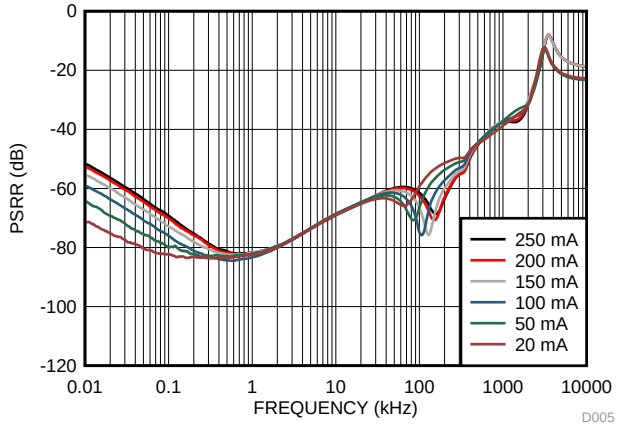

Figure 20. PSRR Loads Averaged 10 Hz to 10 MHz

Copyright © 2012–2018, Texas Instruments Incorporated

7 Detailed Description

7.1 Overview

Designed to meet the needs of sensitive RF and analog circuits, the LP5907 provides low noise, high PSRR, low quiescent current, as well as low line and load transient response figures. Using new innovative design techniques, the LP5907 offers class leading noise performance without the need for a separate noise filter capacitor.

The LP5907 is designed to perform with a single 1-µF input capacitor and a single 1-µF ceramic output capacitor. With a reasonable PCB layout, the single 1-µF ceramic output capacitor can be placed up to 10 cm away from the LP5907 device.

7.2 Functional Block Diagram

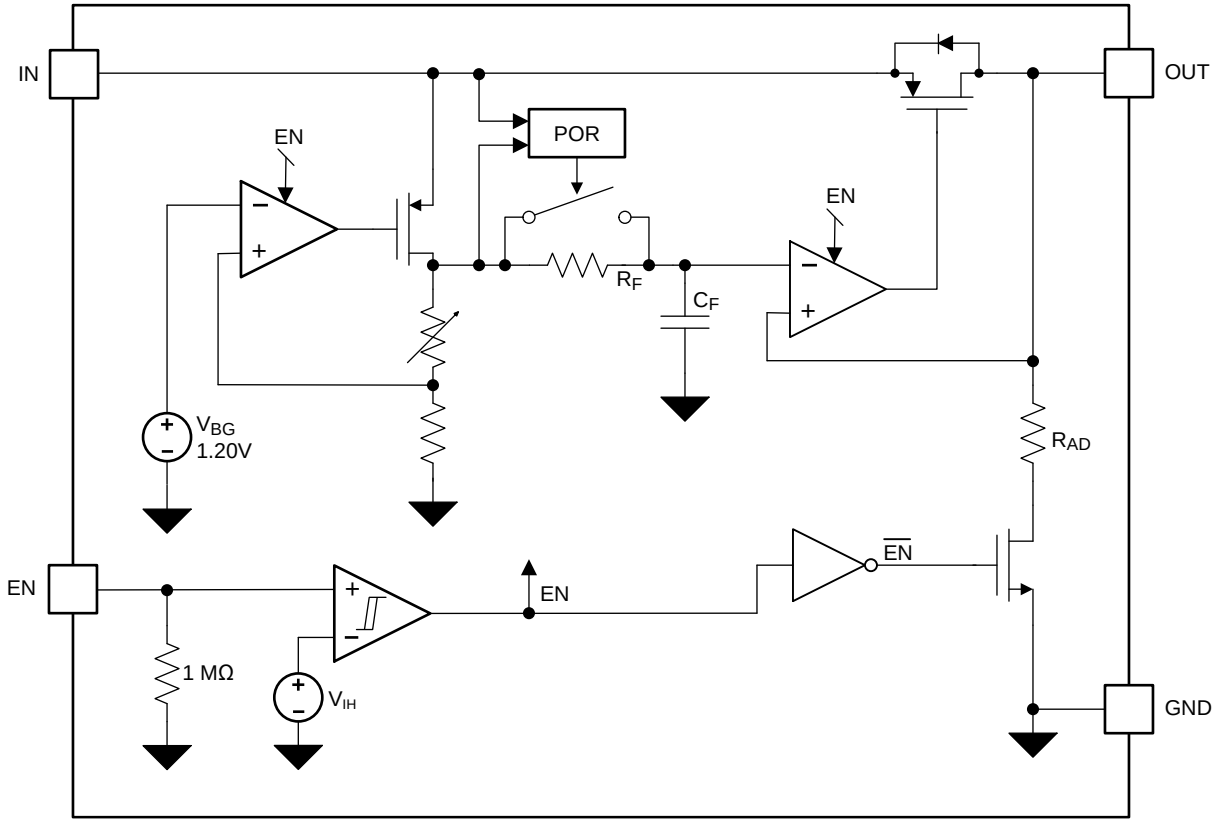

7.3 Feature Description

7.3.1 Enable (EN)

The LP5907 EN pin is internally held low by a 1-MΩ resistor to GND. The EN pin voltage must be higher than the V_{IH} threshold to ensure that the device is fully enabled under all operating conditions. The EN pin voltage must be lower than the V_{IL} threshold to ensure that the device is fully disabled and the automatic output discharge is activated.

7.3.2 Low Output Noise

Any internal noise at the LP5907 reference voltage is reduced by a first order low-pass RC filter before it is passed to the output buffer stage. The low-pass RC filter has a –3 dB cut-off frequency of approximately 0.1 Hz.

Copyright © 2012–2018, Texas Instruments Incorporated

Feature Description (continued)

7.3.3 Output Automatic Discharge

The LP5907 output employs an internal 230-Ω (typical) pulldown resistance to discharge the output when the EN pin is low, and the device is disabled.

7.3.4 Remote Output Capacitor Placement

The LP5907 requires at least a 1-µF capacitor at the OUT pin, but there are no strict requirements about the location of the capacitor in regards the OUT pin. In practical designs, the output capacitor may be located up to 10 cm away from the LDO.

7.3.5 Thermal Overload Protection (T_{SD})

Thermal shutdown disables the output when the junction temperature rises to approximately 160°C which allows the device to cool. When the junction temperature cools to approximately 145°C, the output circuitry enables. Based on power dissipation, thermal resistance, and ambient temperature, the thermal protection circuit may cycle on and off. This thermal cycling limits the dissipation of the regulator and protects it from damage as a result of overheating.

The thermal shutdown circuitry of the LP5907 has been designed to protect against temporary thermal overload conditions. The T_{SD} circuitry was not intended to replace proper heat-sinking. Continuously running the LP5907 device into thermal shutdown may degrade device reliability.

7.4 Device Functional Modes

7.4.1 Enable (EN)

The LP5907 Enable (EN) pin is internally held low by a 1-MΩ resistor to GND. The EN pin voltage must be higher than the V_{IH} threshold to ensure that the device is fully enabled under all operating conditions.

When the EN pin is pulled low, and the output is disabled, the output automatic discharge circuitry is activated. Any charge on the OUT pin is discharged to GND through the internal 230-Ω (typical) pulldown resistance.

7.4.2 Minimum Operating Input Voltage (V_{IN})

The LP5907 does not include any dedicated UVLO circuitry. The LP5907 internal circuitry is not fully functional until V_{IN} is at least 2.2 V. The output voltage is not regulated until V_{IN} has reached at least the greater of 2.2 V or (V_{OUT} + V_{DO}).

Copyright © 2012–2018, Texas Instruments Incorporated

8 Application and Implementation

NOTE

Information in the following applications sections is not part of the TI component specification, and TI does not warrant its accuracy or completeness. TI's customers are responsible for determining suitability of components for their purposes. Customers should validate and test their design implementation to confirm system functionality.

8.1 Application Information

The LP5907 is designed to meet the requirements of RF and analog circuits, by providing low noise, high PSRR, low quiescent current, and low line or load transient response figures. The device offers excellent noise performance without the need for a noise bypass capacitor and is stable with input and output capacitors with a value of 1 µF. The LP5907 delivers this performance in industry standard packages such as DSBGA, X2SON, and SOT-23 which, for this device, are specified with an operating junction temperature (T_J) of –40°C to 125°C.

8.2 Typical Application

Figure 21 shows the typical application circuit for the LP5907. Input and output capacitances may need to be increased above the 1 µF minimum for some applications.

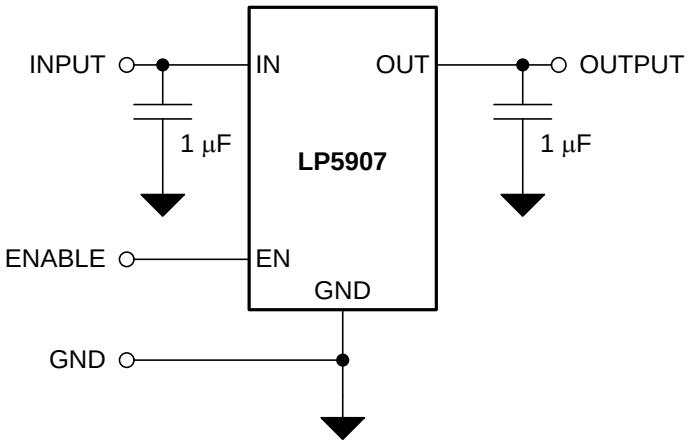

Figure 21. LP5907 Typical Application

8.2.1 Design Requirements

DESIGN PARAMETER	EXAMPLE VALUE
Input voltage range	2.2 V to 5.5 V
Output voltage	1.8 V
Output current	200 mA
Output capacitor range	0.7 µF to 10 µF
Input/Output capacitor ESR range	5 to 500 mΩ

Copyright © 2012–2018, Texas Instruments Incorporated

8.2.2 Detailed Design Procedure

8.2.2.1 Custom Design With WEBENCH® Tools

Click here to create a custom design using the LP5907 device with the WEBENCH® Power Designer.

1. Start by entering the input voltage (V_{IN}), output voltage (V_{OUT}), and output current (I_{OUT}) requirements.
2. Optimize the design for key parameters such as efficiency, footprint, and cost using the optimizer dial.
3. Compare the generated design with other possible solutions from Texas Instruments.

The WEBENCH Power Designer provides a customized schematic along with a list of materials with real-time pricing and component availability.

In most cases, these actions are available:

- Run electrical simulations to see important waveforms and circuit performance
- Run thermal simulations to understand board thermal performance
- Export customized schematic and layout into popular CAD formats
- Print PDF reports for the design, and share the design with colleagues

Get more information about WEBENCH tools at www.ti.com/WEBENCH.

8.2.2.2 Power Dissipation and Device Operation

The permissible power dissipation for any package is a measure of the capability of the device to pass heat from the power source, the junctions of the IC, to the ultimate heat sink, the ambient environment. Thus, the power dissipation is dependent on the ambient temperature and the thermal resistance across the various interfaces between the die junction and ambient air.

The maximum allowable power dissipation for the device in a given package can be calculated using Equation 1:

$$P_{D\text{-}MAX} = ((T_{J\text{-}MAX} - T_A) / R_{\theta JA}) \quad (1)$$

The actual power being dissipated in the device can be represented by Equation 2:

$$P_D = (V_{IN} - V_{OUT}) \times I_{OUT} \quad (2)$$

These two equations establish the relationship between the maximum power dissipation allowed due to thermal consideration, the voltage drop across the device, and the continuous current capability of the device. These two equations should be used to determine the optimum operating conditions for the device in the application.

In applications where lower power dissipation (P_D) and/or excellent package thermal resistance ($R_{\theta JA}$) is present, the maximum ambient temperature ($T_{A\text{-}MAX}$) may be increased.

In applications where high power dissipation and/or poor package thermal resistance is present, the maximum ambient temperature ($T_{A\text{-}MAX}$) may have to be derated. $T_{A\text{-}MAX}$ is dependent on the maximum operating junction temperature ($T_{J\text{-}MAX\text{-}OP}$ = 125°C), the maximum allowable power dissipation in the device package in the application ($P_{D\text{-}MAX}$), and the junction-to-ambient thermal resistance of the part/package in the application ($R_{\theta JA}$), as given by Equation 3:

$$T_{A\text{-}MAX} = (T_{J\text{-}MAX\text{-}OP} - (R_{\theta JA} \times P_{D\text{-}MAX})) \quad (3)$$

Alternately, if $T_{A\text{-}MAX}$ can not be derated, the P_D value must be reduced. This can be accomplished by reducing V_{IN} in the V_{IN}–V_{OUT} term as long as the minimum V_{IN} is met, or by reducing the I_{OUT} term, or by some combination of the two.

8.2.2.3 External Capacitors

Like most low-dropout regulators, the LP5907 requires external capacitors for regulator stability. The device is specifically designed for portable applications requiring minimum board space and smallest components. These capacitors must be correctly selected for good performance.

8.2.2.4 Input Capacitor

An input capacitor is required for stability. The input capacitor should be at least equal to, or greater than, the output capacitor for good load transient performance. At least a 1 µF capacitor has to be connected between the LP5907 input pin and ground for stable operation over full load current range. Basically, it is ok to have more output capacitance than input, as long as the input is at least 1 µF.

Copyright © 2012–2018, Texas Instruments Incorporated

The input capacitor must be located a distance of not more than 1 cm from the input pin and returned to a clean analog ground. Any good quality ceramic, tantalum, or film capacitor may be used at the input.

NOTE

To ensure stable operation it is essential that good PCB practices are employed to minimize ground impedance and keep input inductance low. If these conditions cannot be met, or if long leads are to be used to connect the battery or other power source to the LP5907, TI recommends increasing the input capacitor to at least 10 µF. Also, tantalum capacitors can suffer catastrophic failures due to surge current when connected to a low-impedance source of power (like a battery or a very large capacitor). If a tantalum capacitor is used at the input, it should be verified by the manufacturer to have a surge current rating sufficient for the application. The initial tolerance, applied voltage de-rating, and temperature coefficient must all be considered when selecting the input capacitor to ensure the actual capacitance is never less than 0.7 µF over the entire operating range.

8.2.2.5 Output Capacitor

The LP5907 is designed specifically to work with a very small ceramic output capacitor, typically 1 µF. A ceramic capacitor (dielectric types X5R or X7R) in the 1 µF to 10 µF range, and with ESR between 5 mΩ to 500 mΩ, is suitable in the LP5907 application circuit. For this device the output capacitor should be connected between the OUT pin and a good connection back to the GND pin.

It may also be possible to use tantalum or film capacitors at the device output, V_{OUT}, but these are not as attractive for reasons of size and cost (see *Capacitor Characteristics*).

The output capacitor must meet the requirement for the minimum value of capacitance and have an ESR value that is within the range 5 mΩ to 500 mΩ for stability. Like the input capacitor, the initial tolerance, applied voltage de-rating, and temperature coefficient must all be considered when selecting the input capacitor to ensure the actual capacitance is never less than 0.7 µF over the entire operating range.

8.2.2.6 Capacitor Characteristics

The LP5907 is designed to work with ceramic capacitors on the input and output to take advantage of the benefits they offer. For capacitance values in the range of 1 µF to 10 µF, ceramic capacitors are the smallest, least expensive and have the lowest ESR values, thus making them best for eliminating high frequency noise. The ESR of a typical 1 µF ceramic capacitor is in the range of 20 mΩ to 40 mΩ, which easily meets the ESR requirement for stability for the LP5907.

A better choice for temperature coefficient in a ceramic capacitor is X7R. This type of capacitor is the most stable and holds the capacitance within ±15% over the temperature range. Tantalum capacitors are less desirable than ceramic for use as output capacitors because they are more expensive when comparing equivalent capacitance and voltage ratings in the 1 µF to 10 µF range.

Another important consideration is that tantalum capacitors have higher ESR values than equivalent size ceramics. This means that while it may be possible to find a tantalum capacitor with an ESR value within the stable range, it would have to be larger in capacitance (which means bigger and more costly) than a ceramic capacitor with the same ESR value. It should also be noted that the ESR of a typical tantalum increases about 2:1 as the temperature goes from 25°C down to –40°C, so some guard band must be allowed.

8.2.2.7 Remote Capacitor Operation

The LP5907 requires at least a 1-µF capacitor at the OUT pin, but there is no strict requirements about the location of the capacitor in regards to the pin. In practical designs the output capacitor may be located up to 10 cm away from the LDO. This means that there is no need to have a special capacitor close to the output pin if there is already respective capacitors in the system (like a capacitor at the input of supplied part). The remote capacitor feature helps user to minimize the number of capacitors in the system.

Copyright © 2012–2018, Texas Instruments Incorporated

As a good design practice, keep the wiring parasitic inductance at a minimum, which means to use as wide as possible traces from the LDO output to the capacitors, keeping the LDO output trace layer as close to ground layer as possible and avoiding vias on the path. If there is a need to use vias, implement as many as possible vias between the connection layers. The recommendation is to keep parasitic wiring inductance less than 35 nH. For the applications with fast load transients, it is recommended to use an input capacitor equal to or larger to the sum of the capacitance at the output node for the best load transient performance.

8.2.2.8 No-Load Stability

The LP5907 remains stable, and in regulation, with no external load.

8.2.2.9 Enable Control

The LP5907 may be switched ON or OFF by a logic input at the EN pin. A voltage on this pin greater than V_{IH} turns the device on, while a voltage less than V_{IL} turns the device off.

When the EN pin is low, the regulator output is off and the device typically consumes less than 1 µA. Additionally, an output pulldown circuit is activated which ensures that any charge stored on C_{OUT} is discharged to ground.

If the application does not require the use of the shutdown feature, the EN pin can be tied directly to the IN pin to keep the regulator output permanently on.

An internal 1-MΩ pulldown resistor ties the EN input to ground, ensuring that the device remains off if the EN pin is left open circuit. To ensure proper operation, the signal source used to drive the EN pin must be able to swing above and below the specified turnon or turnoff voltage thresholds listed in the *Electrical Characteristics* under V_{IL} and V_{IH}.

8.2.3 Application Curves

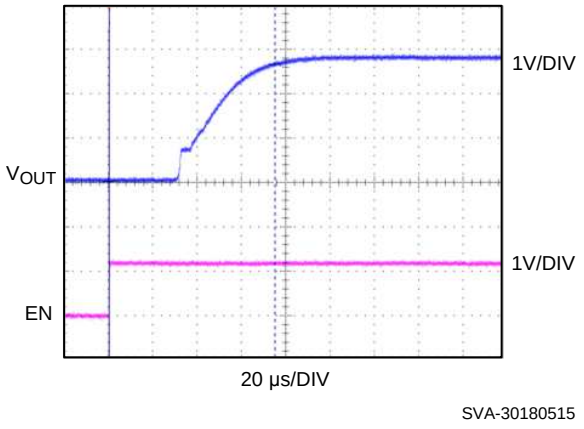

Figure 22. Start-Up

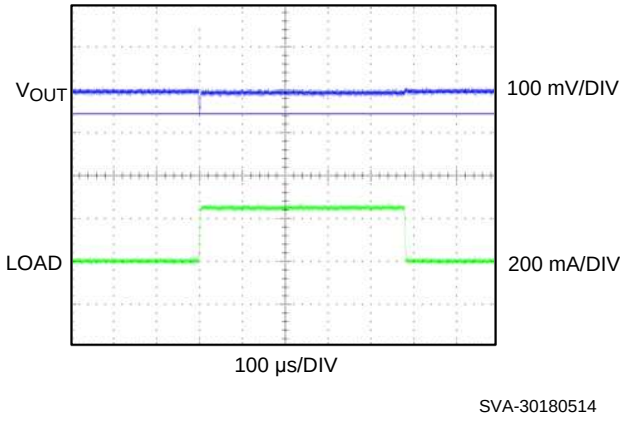

Figure 23. Load Transient Response

9 Power Supply Recommendations

This device is designed to operate from an input supply voltage range of 2.2 V to 5.5 V. The input supply must be well regulated and free of spurious noise. To ensure that the LP5907 output voltage is well regulated and dynamic performance is optimum, the input supply must be at least V_{OUT} + 1 V. A minimum capacitor value of 1 µF is required to be within 1 cm of the IN pin.

Copyright © 2012–2018, Texas Instruments Incorporated

10 Layout

10.1 Layout Guidelines

The dynamic performance of the LP5907 is dependant on the layout of the PCB. PCB layout practices that are adequate for typical LDOs may degrade the PSRR, noise, or transient performance of the LP5907.

Best performance is achieved by placing C_{IN} and C_{OUT} on the same side of the PCB as the LP5907, and as close to the package as is practical. The ground connections for C_{IN} and C_{OUT} must be back to the LP5907 ground pin using as wide and short a copper trace as is practical.

Connections using long trace lengths, narrow trace widths, and/or connections through vias must be avoided. These add parasitic inductances and resistance that results in inferior performance especially during transient conditions

10.1.1 X2SON Mounting

The X2SON package thermal pad must be soldered to the printed circuit board for proper thermal and mechanical performance. For more information, see the *QFN/SON PCB Attachment* application report.

10.1.2 DSBGA Mounting

The DSBGA package requires specific mounting techniques, which are detailed in *AN-1112 DSBGA Wafer Level Chip Scale Package*. For best results during assembly, alignment ordinals on the PC board may be used to facilitate placement of the DSBGA device.

10.1.3 DSBGA Light Sensitivity

Exposing the DSBGA device to direct light may cause incorrect operation of the device. Light sources such as halogen lamps can affect electrical performance if they are situated in proximity to the device. Light with wavelengths in the red and infrared part of the spectrum have the most detrimental effect; thus, the fluorescent lighting used inside most buildings has very little effect on performance.

10.2 Layout Examples

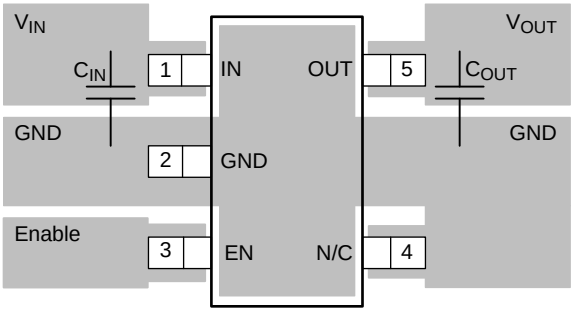

Figure 24. LP5907MF-x.x (SOT-23) Typical Layout

Copyright © 2012–2018, Texas Instruments Incorporated

Layout Examples (continued)

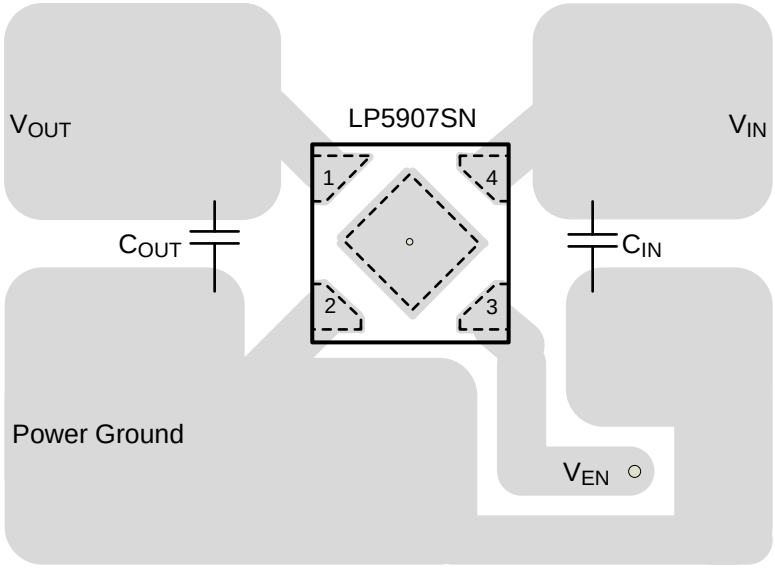

Figure 25. LP5907SN-xx (X2SON) Typical Layout

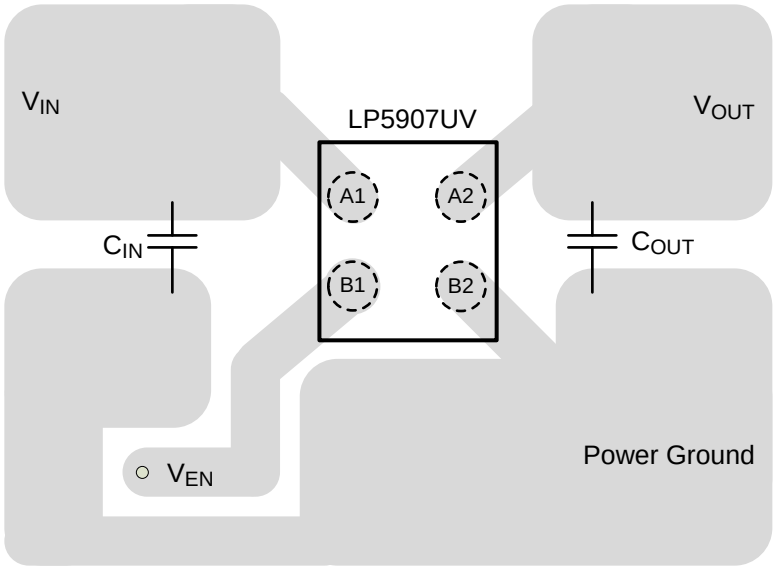

Figure 26. LP5907A/UV-x.x (DSBGA) Typical Layout

11 Device and Documentation Support

11.1 Documentation Support

11.1.1 Custom Design With WEBENCH® Tools

Click here to create a custom design using the LP5907 device with the WEBENCH® Power Designer.

1. Start by entering the input voltage (V_{IN}), output voltage (V_{OUT}), and output current (I_{OUT}) requirements.
2. Optimize the design for key parameters such as efficiency, footprint, and cost using the optimizer dial.
3. Compare the generated design with other possible solutions from Texas Instruments.

The WEBENCH Power Designer provides a customized schematic along with a list of materials with real-time pricing and component availability.

In most cases, these actions are available:

- Run electrical simulations to see important waveforms and circuit performance
- Run thermal simulations to understand board thermal performance
- Export customized schematic and layout into popular CAD formats
- Print PDF reports for the design, and share the design with colleagues

Get more information about WEBENCH tools at www.ti.com/WEBENCH.

11.1.2 Related Documentation

For related documentation, see the following:

- *AN-1112 DSBGA Wafer Level Chip Scale Package*
- *QFN/SON PCB Attachment* Application Report

11.2 Receiving Notification of Documentation Updates

To receive notification of documentation updates, navigate to the device product folder on ti.com. In the upper right corner, click on *Alert me* to register and receive a weekly digest of any product information that has changed. For change details, review the revision history included in any revised document.

11.3 Community Resources

The following links connect to TI community resources. Linked contents are provided "AS IS" by the respective contributors. They do not constitute TI specifications and do not necessarily reflect TI's views; see TI's Terms of Use.

TI E2E™ Online Community ***TI's Engineer-to-Engineer (E2E) Community.*** Created to foster collaboration among engineers. At e2e.ti.com, you can ask questions, share knowledge, explore ideas and help solve problems with fellow engineers.

Design Support ***TI's Design Support*** Quickly find helpful E2E forums along with design support tools and contact information for technical support.

11.4 Trademarks

E2E is a trademark of Texas Instruments.
WEBENCH is a registered trademark of Texas Instruments.
All other trademarks are the property of their respective owners.

11.5 Electrostatic Discharge Caution



These devices have limited built-in ESD protection. The leads should be shorted together or the device placed in conductive foam during storage or handling to prevent electrostatic damage to the MOS gates.

11.6 Glossary

SLYZ022 — *TI Glossary*.

This glossary lists and explains terms, acronyms, and definitions.

Copyright © 2012–2018, Texas Instruments Incorporated

12 Mechanical, Packaging, and Orderable Information

The following pages include mechanical, packaging, and orderable information. This information is the most current data available for the designated devices. This data is subject to change without notice and revision of this document. For browser-based versions of this data sheet, refer to the left-hand navigation.

Copyright © 2012–2018, Texas Instruments Incorporated

PACKAGING INFORMATION

Orderable Device	Status (1)	Package Type	Package Drawing	Pins	Package Qty	Eco Plan (2)	Lead/Ball Finish (6)	MSL Peak Temp (3)	Op Temp (°C)	Device Marking (4/5)	Samples
LP5907A28YKMR	ACTIVE	DSBGA	YKM	4	3000	Green (RoHS & no Sb/Br)	SAC396	Level-1-260C-UNLIM	-40 to 125	Q	Samples
LP5907A29YKMR	ACTIVE	DSBGA	YKM	4	3000	Green (RoHS & no Sb/Br)	SAC396	Level-1-260C-UNLIM	-40 to 125	Y	Samples
LP5907A33YKMR	ACTIVE	DSBGA	YKM	4	3000	Green (RoHS & no Sb/Br)	Call TI	Level-1-260C-UNLIM	-40 to 125	N	Samples
LP5907MFX-1.2/NOPB	ACTIVE	SOT-23	DBV	5	3000	Green (RoHS & no Sb/Br)	CU SN	Level-1-260C-UNLIM	-40 to 125	LLTB	Samples
LP5907MFX-1.5/NOPB	ACTIVE	SOT-23	DBV	5	3000	Green (RoHS & no Sb/Br)	CU SN	Level-1-260C-UNLIM	-40 to 125	LN8B	Samples
LP5907MFX-1.8/NOPB	ACTIVE	SOT-23	DBV	5	3000	Green (RoHS & no Sb/Br)	CU SN	Level-1-260C-UNLIM	-40 to 125	LLUB	Samples
LP5907MFX-2.5/NOPB	ACTIVE	SOT-23	DBV	5	3000	Green (RoHS & no Sb/Br)	CU SN	Level-1-260C-UNLIM	-40 to 125	LN7B	Samples
LP5907MFX-2.8/NOPB	ACTIVE	SOT-23	DBV	5	3000	Green (RoHS & no Sb/Br)	CU SN	Level-1-260C-UNLIM	-40 to 125	LLYB	Samples
LP5907MFX-2.85/NOPB	ACTIVE	SOT-23	DBV	5	3000	Green (RoHS & no Sb/Br)	CU SN	Level-1-260C-UNLIM	-40 to 125	LN4B	Samples
LP5907MFX-2.9/NOPB	ACTIVE	SOT-23	DBV	5	3000	Green (RoHS & no Sb/Br)	CU SN	Level-1-260C-UNLIM	-40 to 125	1E5X	Samples
LP5907MFX-3.0/NOPB	ACTIVE	SOT-23	DBV	5	3000	Green (RoHS & no Sb/Br)	CU SN	Level-1-260C-UNLIM	-40 to 125	LLZB	Samples
LP5907MFX-3.1/NOPB	ACTIVE	SOT-23	DBV	5	3000	Green (RoHS & no Sb/Br)	CU SN	Level-1-260C-UNLIM	-40 to 125	LN5B	Samples
LP5907MFX-3.2/NOPB	ACTIVE	SOT-23	DBV	5	3000	Green (RoHS & no Sb/Br)	CU SN	Level-1-260C-UNLIM	-40 to 125	LN6B	Samples
LP5907MFX-3.3/NOPB	ACTIVE	SOT-23	DBV	5	3000	Green (RoHS & no Sb/Br)	CU SN	Level-1-260C-UNLIM	-40 to 125	LLVB	Samples
LP5907MFX-4.5/NOPB	ACTIVE	SOT-23	DBV	5	3000	Green (RoHS & no Sb/Br)	CU SN	Level-1-260C-UNLIM	-40 to 125	LLXB	Samples
LP5907SNX-1.2/NOPB	ACTIVE	X2SON	DQN	4	3000	Green (RoHS & no Sb/Br)	CU NIPDAU	Level-1-260C-UNLIM	-40 to 125	CF	Samples
LP5907SNX-1.8/NOPB	ACTIVE	X2SON	DQN	4	3000	Green (RoHS & no Sb/Br)	CU NIPDAU	Level-1-260C-UNLIM	-40 to 125	CG	Samples

Orderable Device	Status (1)	Package Type	Package Drawing	Pins	Package Qty	Eco Plan (2)	Lead/Ball Finish (6)	MSL Peak Temp (3)	Op Temp (°C)	Device Marking (4/5)	Samples
LP5907SNX-1.9	ACTIVE	X2SON	DQN	4	3000	Green (RoHS & no Sb/Br)	CU NIPDAU	Level-1-260C-UNLIM	-40 to 125	3Z	Samples
LP5907SNX-2.2/NOPB	ACTIVE	X2SON	DQN	4	3000	Green (RoHS & no Sb/Br)	CU NIPDAU	Level-1-260C-UNLIM	-40 to 125	EP	Samples
LP5907SNX-2.5/NOPB	ACTIVE	X2SON	DQN	4	3000	Green (RoHS & no Sb/Br)	CU NIPDAU	Level-1-260C-UNLIM	-40 to 125	F9	Samples
LP5907SNX-2.7/NOPB	ACTIVE	X2SON	DQN	4	3000	Green (RoHS & no Sb/Br)	CU NIPDAU	Level-1-260C-UNLIM	-40 to 125	CH	Samples
LP5907SNX-2.75	ACTIVE	X2SON	DQN	4	3000	Green (RoHS & no Sb/Br)	CU NIPDAU	Level-1-260C-UNLIM	-40 to 125	HI	Samples
LP5907SNX-2.8/NOPB	ACTIVE	X2SON	DQN	4	3000	Green (RoHS & no Sb/Br)	CU NIPDAU	Level-1-260C-UNLIM	-40 to 125	CI	Samples
LP5907SNX-2.85/NOPB	ACTIVE	X2SON	DQN	4	3000	Green (RoHS & no Sb/Br)	CU NIPDAU	Level-1-260C-UNLIM	-40 to 125	CJ	Samples
LP5907SNX-2.9/NOPB	ACTIVE	X2SON	DQN	4	3000	Green (RoHS & no Sb/Br)	CU NIPDAU	Level-1-260C-UNLIM	-40 to 125	GV	Samples
LP5907SNX-3.0/NOPB	ACTIVE	X2SON	DQN	4	3000	Green (RoHS & no Sb/Br)	CU NIPDAU	Level-1-260C-UNLIM	-40 to 125	CK	Samples
LP5907SNX-3.1/NOPB	ACTIVE	X2SON	DQN	4	3000	Green (RoHS & no Sb/Br)	CU NIPDAU	Level-1-260C-UNLIM	-40 to 125	CL	Samples
LP5907SNX-3.2/NOPB	ACTIVE	X2SON	DQN	4	3000	Green (RoHS & no Sb/Br)	CU NIPDAU	Level-1-260C-UNLIM	-40 to 125	CM	Samples
LP5907SNX-3.3/NOPB	ACTIVE	X2SON	DQN	4	3000	Green (RoHS & no Sb/Br)	CU NIPDAU	Level-1-260C-UNLIM	-40 to 125	CN	Samples
LP5907SNX-4.0/NOPB	ACTIVE	X2SON	DQN	4	3000	Green (RoHS & no Sb/Br)	CU NIPDAU	Level-1-260C-UNLIM	-40 to 125	GU	Samples
LP5907SNX-4.5/NOPB	ACTIVE	X2SON	DQN	4	3000	Green (RoHS & no Sb/Br)	CU NIPDAU	Level-1-260C-UNLIM	-40 to 125	CO	Samples
LP5907UVE-1.2/NOPB	ACTIVE	DSBGA	YKE	4	250	Green (RoHS & no Sb/Br)	SNAGCU	Level-1-260C-UNLIM	-40 to 125	R	Samples
LP5907UVE-1.8/NOPB	ACTIVE	DSBGA	YKE	4	250	Green (RoHS & no Sb/Br)	SNAGCU	Level-1-260C-UNLIM	-40 to 125	S	Samples
LP5907UVE-2.8/NOPB	ACTIVE	DSBGA	YKE	4	250	Green (RoHS & no Sb/Br)	SNAGCU	Level-1-260C-UNLIM	-40 to 125	U	Samples
LP5907UVE-2.85/NOPB	ACTIVE	DSBGA	YKE	4	250	Green (RoHS & no Sb/Br)	SNAGCU	Level-1-260C-UNLIM	-40 to 125	V	Samples

Orderable Device	Status (1)	Package Type	Package Drawing	Pins	Package Qty	Eco Plan (2)	Lead/Ball Finish (6)	MSL Peak Temp (3)	Op Temp (°C)	Device Marking (4/5)	Samples
LP5907UVE-3.0/NOPB	ACTIVE	DSBGA	YKE	4	250	Green (RoHS & no Sb/Br)	SNAGCU	Level-1-260C-UNLIM	-40 to 125	B	Samples
LP5907UVE-3.1/NOPB	ACTIVE	DSBGA	YKE	4	250	Green (RoHS & no Sb/Br)	SNAGCU	Level-1-260C-UNLIM	-40 to 125	X	Samples
LP5907UVE-3.2/NOPB	ACTIVE	DSBGA	YKE	4	250	Green (RoHS & no Sb/Br)	SNAGCU	Level-1-260C-UNLIM	-40 to 125	C	Samples
LP5907UVE-3.3/NOPB	ACTIVE	DSBGA	YKE	4	250	Green (RoHS & no Sb/Br)	SNAGCU	Level-1-260C-UNLIM	-40 to 125	D	Samples
LP5907UVE-4.5/NOPB	ACTIVE	DSBGA	YKE	4	250	Green (RoHS & no Sb/Br)	SNAGCU	Level-1-260C-UNLIM	-40 to 125	Z	Samples
LP5907UVX-1.2/NOPB	ACTIVE	DSBGA	YKE	4	3000	Green (RoHS & no Sb/Br)	SNAGCU	Level-1-260C-UNLIM	-40 to 125	R	Samples
LP5907UVX-1.6/NOPB	ACTIVE	DSBGA	YKE	4	3000	Green (RoHS & no Sb/Br)	SAC396	Level-1-260C-UNLIM	-40 to 125	J	Samples
LP5907UVX-1.8/NOPB	ACTIVE	DSBGA	YKE	4	3000	Green (RoHS & no Sb/Br)	SNAGCU	Level-1-260C-UNLIM	-40 to 125	S	Samples
LP5907UVX-2.2/NOPB	ACTIVE	DSBGA	YKE	4	3000	Green (RoHS & no Sb/Br)	SAC396	Level-1-260C-UNLIM	-40 to 125	5	Samples
LP5907UVX-2.5/NOPB	ACTIVE	DSBGA	YKE	4	3000	Green (RoHS & no Sb/Br)	SNAGCU	Level-1-260C-UNLIM	-40 to 125	E	Samples
LP5907UVX-2.8/NOPB	ACTIVE	DSBGA	YKE	4	3000	Green (RoHS & no Sb/Br)	SNAGCU	Level-1-260C-UNLIM	-40 to 125	U	Samples
LP5907UVX-2.85/NOPB	ACTIVE	DSBGA	YKE	4	3000	Green (RoHS & no Sb/Br)	SNAGCU	Level-1-260C-UNLIM	-40 to 125	V	Samples
LP5907UVX-3.0/NOPB	ACTIVE	DSBGA	YKE	4	3000	Green (RoHS & no Sb/Br)	SNAGCU	Level-1-260C-UNLIM	-40 to 125	B	Samples
LP5907UVX-3.1/NOPB	ACTIVE	DSBGA	YKE	4	3000	Green (RoHS & no Sb/Br)	SNAGCU	Level-1-260C-UNLIM	-40 to 125	X	Samples
LP5907UVX-3.2/NOPB	ACTIVE	DSBGA	YKE	4	3000	Green (RoHS & no Sb/Br)	SNAGCU	Level-1-260C-UNLIM	-40 to 125	C	Samples
LP5907UVX-3.3/NOPB	ACTIVE	DSBGA	YKE	4	3000	Green (RoHS & no Sb/Br)	SNAGCU	Level-1-260C-UNLIM	-40 to 125	D	Samples
LP5907UVX-4.5/NOPB	ACTIVE	DSBGA	YKE	4	3000	Green (RoHS & no Sb/Br)	SNAGCU	Level-1-260C-UNLIM	-40 to 125	Z	Samples
LP5907UVX19/NOPB	ACTIVE	DSBGA	YKE	4	3000	Green (RoHS & no Sb/Br)	SNAGCU	Level-1-260C-UNLIM	-40 to 125	8	Samples

Orderable Device	Status (1)	Package Type	Package Drawing	Pins	Package Qty	Eco Plan (2)	Lead/Ball Finish (6)	MSL Peak Temp (3)	Op Temp (°C)	Device Marking (4/5)	Samples
LP5907UVX37/NOPB	ACTIVE	DSBGA	YKE	4	3000	Green (RoHS & no Sb/Br)	SNAGCU	Level-1-260C-UNLIM	-40 to 125	9	Samples
LP5907YKGR-2.85	PREVIEW	DSBGA	YKG	4	3000	TBD	Call TI	Call TI	-40 to 125		

(1) The marketing status values are defined as follows:
ACTIVE: Product device recommended for new designs.
LIFEBUY: TI has announced that the device will be discontinued, and a lifetime-buy period is in effect.
NRND: Not recommended for new designs. Device is in production to support existing customers, but TI does not recommend using this part in a new design.
PREVIEW: Device has been announced but is not in production. Samples may or may not be available.
OBSOLETE: TI has discontinued the production of the device.

(2) **RoHS:** TI defines "RoHS" to mean semiconductor products that are compliant with the current EU RoHS requirements for all 10 RoHS substances, including the requirement that RoHS substance do not exceed 0.1% by weight in homogeneous materials. Where designed to be soldered at high temperatures, "RoHS" products are suitable for use in specified lead-free processes. TI may reference these types of products as "Pb-Free".
RoHS Exempt: TI defines "RoHS Exempt" to mean products that contain lead but are compliant with EU RoHS pursuant to a specific EU RoHS exemption.
Green: TI defines "Green" to mean the content of Chlorine (Cl) and Bromine (Br) based flame retardants meet JS709B low halogen requirements of <=1000ppm threshold. Antimony trioxide based flame retardants must also meet the <=1000ppm threshold requirement.

(3) MSL, Peak Temp. - The Moisture Sensitivity Level rating according to the JEDEC industry standard classifications, and peak solder temperature.

(4) There may be additional marking, which relates to the logo, the lot trace code information, or the environmental category on the device.

(5) Multiple Device Markings will be inside parentheses. Only one Device Marking contained in parentheses and separated by a "~" will appear on a device. If a line is indented then it is a continuation of the previous line and the two combined represent the entire Device Marking for that device.

(6) Lead/Ball Finish - Orderable Devices may have multiple material finish options. Finish options are separated by a vertical ruled line. Lead/Ball Finish values may wrap to two lines if the finish value exceeds the maximum column width.

Important Information and Disclaimer: The information provided on this page represents TI's knowledge and belief as of the date that it is provided. TI bases its knowledge and belief on information provided by third parties, and makes no representation or warranty as to the accuracy of such information. Efforts are underway to better integrate information from third parties. TI has taken and continues to take reasonable steps to provide representative and accurate information but may not have conducted destructive testing or chemical analysis on incoming materials and chemicals. TI and TI suppliers consider certain information to be proprietary, and thus CAS numbers and other limited information may not be available for release.

In no event shall TI's liability arising out of such information exceed the total purchase price of the TI part(s) at issue in this document sold by TI to Customer on an annual basis.

OTHER QUALIFIED VERSIONS OF LP5907 :

- Automotive: LP5907-Q1

NOTE: Qualified Version Definitions:

- Automotive - Q100 devices qualified for high-reliability automotive applications targeting zero defects

TAPE AND REEL INFORMATION

REEL DIMENSIONS

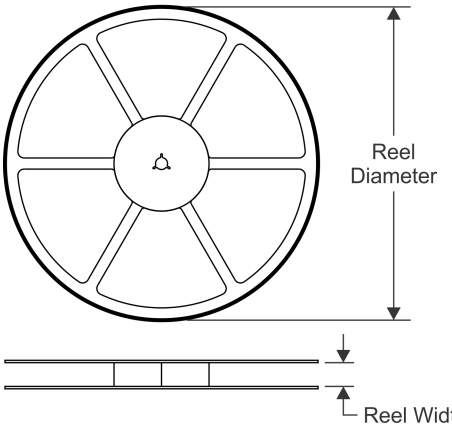

TAPE DIMENSIONS

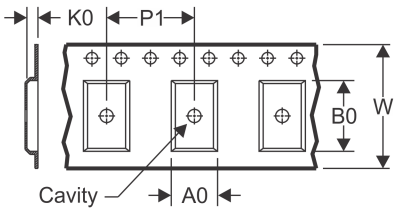

A0	Dimension designed to accommodate the component width
B0	Dimension designed to accommodate the component length
K0	Dimension designed to accommodate the component thickness
W	Overall width of the carrier tape
P1	Pitch between successive cavity centers

QUADRANT ASSIGNMENTS FOR PIN 1 ORIENTATION IN TAPE

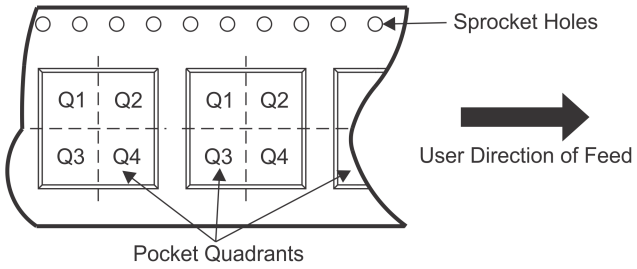

*All dimensions are nominal

Device	Package Type	Package Drawing	Pins	SPQ	Reel Diameter (mm)	Reel Width W1 (mm)	A0 (mm)	B0 (mm)	K0 (mm)	P1 (mm)	W (mm)	Pin1 Quadrant
LP5907A28YKMR	DSBGA	YKM	4	3000	178.0	8.4	0.74	0.74	0.54	4.0	8.0	Q1
LP5907A29YKMR	DSBGA	YKM	4	3000	178.0	8.4	0.74	0.74	0.54	4.0	8.0	Q1
LP5907A33YKMR	DSBGA	YKM	4	3000	178.0	8.4	0.74	0.74	0.54	4.0	8.0	Q1
LP5907MFX-1.2/NOPB	SOT-23	DBV	5	3000	178.0	8.4	3.2	3.2	1.4	4.0	8.0	Q3
LP5907MFX-1.5/NOPB	SOT-23	DBV	5	3000	178.0	8.4	3.2	3.2	1.4	4.0	8.0	Q3
LP5907MFX-1.8/NOPB	SOT-23	DBV	5	3000	178.0	8.4	3.2	3.2	1.4	4.0	8.0	Q3
LP5907MFX-2.5/NOPB	SOT-23	DBV	5	3000	178.0	8.4	3.2	3.2	1.4	4.0	8.0	Q3
LP5907MFX-2.8/NOPB	SOT-23	DBV	5	3000	178.0	8.4	3.2	3.2	1.4	4.0	8.0	Q3
LP5907MFX-2.85/NOPB	SOT-23	DBV	5	3000	178.0	8.4	3.2	3.2	1.4	4.0	8.0	Q3
LP5907MFX-2.9/NOPB	SOT-23	DBV	5	3000	178.0	8.4	3.2	3.2	1.4	4.0	8.0	Q3
LP5907MFX-3.0/NOPB	SOT-23	DBV	5	3000	178.0	8.4	3.2	3.2	1.4	4.0	8.0	Q3
LP5907MFX-3.1/NOPB	SOT-23	DBV	5	3000	178.0	8.4	3.2	3.2	1.4	4.0	8.0	Q3
LP5907MFX-3.2/NOPB	SOT-23	DBV	5	3000	178.0	8.4	3.2	3.2	1.4	4.0	8.0	Q3
LP5907MFX-3.3/NOPB	SOT-23	DBV	5	3000	178.0	8.4	3.2	3.2	1.4	4.0	8.0	Q3
LP5907MFX-4.5/NOPB	SOT-23	DBV	5	3000	178.0	8.4	3.2	3.2	1.4	4.0	8.0	Q3
LP5907SNX-1.2/NOPB	X2SON	DQN	4	3000	180.0	9.5	1.16	1.16	0.63	4.0	8.0	Q2
LP5907SNX-1.8/NOPB	X2SON	DQN	4	3000	180.0	9.5	1.16	1.16	0.63	4.0	8.0	Q2
LP5907SNX-1.9	X2SON	DQN	4	3000	180.0	9.5	1.16	1.16	0.63	4.0	8.0	Q2

Device	Package Type	Package Drawing	Pins	SPQ	Reel Diameter (mm)	Reel Width W1 (mm)	A0 (mm)	B0 (mm)	K0 (mm)	P1 (mm)	W (mm)	Pin1 Quadrant
LP5907SNX-2.2/NOPB	X2SON	DQN	4	3000	180.0	9.5	1.16	1.16	0.63	4.0	8.0	Q2
LP5907SNX-2.5/NOPB	X2SON	DQN	4	3000	180.0	9.5	1.16	1.16	0.63	4.0	8.0	Q2
LP5907SNX-2.7/NOPB	X2SON	DQN	4	3000	180.0	9.5	1.16	1.16	0.63	4.0	8.0	Q2
LP5907SNX-2.75	X2SON	DQN	4	3000	180.0	9.5	1.16	1.16	0.63	4.0	8.0	Q2
LP5907SNX-2.8/NOPB	X2SON	DQN	4	3000	180.0	9.5	1.16	1.16	0.63	4.0	8.0	Q2
LP5907SNX-2.85/NOPB	X2SON	DQN	4	3000	180.0	9.5	1.16	1.16	0.63	4.0	8.0	Q2
LP5907SNX-2.9/NOPB	X2SON	DQN	4	3000	180.0	9.5	1.16	1.16	0.63	4.0	8.0	Q2
LP5907SNX-3.0/NOPB	X2SON	DQN	4	3000	180.0	9.5	1.16	1.16	0.63	4.0	8.0	Q2
LP5907SNX-3.1/NOPB	X2SON	DQN	4	3000	180.0	9.5	1.16	1.16	0.63	4.0	8.0	Q2
LP5907SNX-3.2/NOPB	X2SON	DQN	4	3000	180.0	9.5	1.16	1.16	0.63	4.0	8.0	Q2
LP5907SNX-3.3/NOPB	X2SON	DQN	4	3000	180.0	9.5	1.16	1.16	0.63	4.0	8.0	Q2
LP5907SNX-4.0/NOPB	X2SON	DQN	4	3000	180.0	9.5	1.16	1.16	0.63	4.0	8.0	Q2
LP5907SNX-4.5/NOPB	X2SON	DQN	4	3000	180.0	9.5	1.16	1.16	0.63	4.0	8.0	Q2
LP5907UVE-1.2/NOPB	DSBGA	YKE	4	250	178.0	8.4	0.71	0.71	0.51	2.0	8.0	Q1
LP5907UVE-1.2/NOPB	DSBGA	YKE	4	250	178.0	8.4	0.74	0.74	0.5	2.0	8.0	Q1
LP5907UVE-1.8/NOPB	DSBGA	YKE	4	250	178.0	8.4	0.71	0.71	0.51	2.0	8.0	Q1
LP5907UVE-1.8/NOPB	DSBGA	YKE	4	250	178.0	8.4	0.74	0.74	0.5	2.0	8.0	Q1
LP5907UVE-2.8/NOPB	DSBGA	YKE	4	250	178.0	8.4	0.71	0.71	0.51	2.0	8.0	Q1
LP5907UVE-2.8/NOPB	DSBGA	YKE	4	250	178.0	8.4	0.74	0.74	0.5	2.0	8.0	Q1
LP5907UVE-3.0/NOPB	DSBGA	YKE	4	250	178.0	8.4	0.71	0.71	0.51	2.0	8.0	Q1
LP5907UVE-3.0/NOPB	DSBGA	YKE	4	250	178.0	8.4	0.74	0.74	0.5	2.0	8.0	Q1
LP5907UVE-3.1/NOPB	DSBGA	YKE	4	250	178.0	8.4	0.74	0.74	0.5	2.0	8.0	Q1
LP5907UVE-3.1/NOPB	DSBGA	YKE	4	250	178.0	8.4	0.71	0.71	0.51	2.0	8.0	Q1
LP5907UVE-3.2/NOPB	DSBGA	YKE	4	250	178.0	8.4	0.74	0.74	0.5	2.0	8.0	Q1
LP5907UVE-3.2/NOPB	DSBGA	YKE	4	250	178.0	8.4	0.71	0.71	0.51	2.0	8.0	Q1
LP5907UVE-3.3/NOPB	DSBGA	YKE	4	250	178.0	8.4	0.71	0.71	0.51	2.0	8.0	Q1
LP5907UVE-3.3/NOPB	DSBGA	YKE	4	250	178.0	8.4	0.74	0.74	0.5	2.0	8.0	Q1
LP5907UVE-4.5/NOPB	DSBGA	YKE	4	250	178.0	8.4	0.71	0.71	0.51	2.0	8.0	Q1
LP5907UVE-4.5/NOPB	DSBGA	YKE	4	250	178.0	8.4	0.74	0.74	0.5	2.0	8.0	Q1
LP5907UVX-1.2/NOPB	DSBGA	YKE	4	3000	178.0	8.4	0.74	0.74	0.5	2.0	8.0	Q1
LP5907UVX-1.2/NOPB	DSBGA	YKE	4	3000	178.0	8.4	0.71	0.71	0.51	2.0	8.0	Q1
LP5907UVX-1.6/NOPB	DSBGA	YKE	4	3000	178.0	8.4	0.74	0.74	0.5	4.0	8.0	Q1
LP5907UVX-1.8/NOPB	DSBGA	YKE	4	3000	178.0	8.4	0.71	0.71	0.51	2.0	8.0	Q1
LP5907UVX-1.8/NOPB	DSBGA	YKE	4	3000	178.0	8.4	0.74	0.74	0.5	2.0	8.0	Q1
LP5907UVX-2.2/NOPB	DSBGA	YKE	4	3000	178.0	8.4	0.74	0.74	0.5	2.0	8.0	Q1
LP5907UVX-2.5/NOPB	DSBGA	YKE	4	3000	178.0	8.4	0.71	0.71	0.51	2.0	8.0	Q1
LP5907UVX-2.8/NOPB	DSBGA	YKE	4	3000	178.0	8.4	0.74	0.74	0.5	2.0	8.0	Q1
LP5907UVX-2.8/NOPB	DSBGA	YKE	4	3000	178.0	8.4	0.71	0.71	0.51	2.0	8.0	Q1
LP5907UVX-2.85/NOPB	DSBGA	YKE	4	3000	178.0	8.4	0.74	0.74	0.5	2.0	8.0	Q1
LP5907UVX-2.85/NOPB	DSBGA	YKE	4	3000	178.0	8.4	0.71	0.71	0.51	2.0	8.0	Q1
LP5907UVX-3.0/NOPB	DSBGA	YKE	4	3000	178.0	8.4	0.74	0.74	0.5	2.0	8.0	Q1
LP5907UVX-3.0/NOPB	DSBGA	YKE	4	3000	178.0	8.4	0.71	0.71	0.51	2.0	8.0	Q1
LP5907UVX-3.1/NOPB	DSBGA	YKE	4	3000	178.0	8.4	0.71	0.71	0.51	2.0	8.0	Q1

Device	Package Type	Package Drawing	Pins	SPQ	Reel Diameter (mm)	Reel Width W1 (mm)	A0 (mm)	B0 (mm)	K0 (mm)	P1 (mm)	W (mm)	Pin1 Quadrant
LP5907UVX-3.1/NOPB	DSBGA	YKE	4	3000	178.0	8.4	0.74	0.74	0.5	2.0	8.0	Q1
LP5907UVX-3.2/NOPB	DSBGA	YKE	4	3000	178.0	8.4	0.74	0.74	0.5	2.0	8.0	Q1
LP5907UVX-3.2/NOPB	DSBGA	YKE	4	3000	178.0	8.4	0.71	0.71	0.51	2.0	8.0	Q1
LP5907UVX-3.3/NOPB	DSBGA	YKE	4	3000	178.0	8.4	0.74	0.74	0.5	2.0	8.0	Q1
LP5907UVX-3.3/NOPB	DSBGA	YKE	4	3000	178.0	8.4	0.71	0.71	0.51	2.0	8.0	Q1
LP5907UVX-4.5/NOPB	DSBGA	YKE	4	3000	178.0	8.4	0.71	0.71	0.51	2.0	8.0	Q1
LP5907UVX-4.5/NOPB	DSBGA	YKE	4	3000	178.0	8.4	0.74	0.74	0.5	2.0	8.0	Q1
LP5907UVX19/NOPB	DSBGA	YKE	4	3000	178.0	8.4	0.71	0.71	0.51	2.0	8.0	Q1
LP5907UVX19/NOPB	DSBGA	YKE	4	3000	178.0	8.4	0.74	0.74	0.5	2.0	8.0	Q1
LP5907UVX37/NOPB	DSBGA	YKE	4	3000	178.0	8.4	0.74	0.74	0.5	2.0	8.0	Q1
LP5907UVX37/NOPB	DSBGA	YKE	4	3000	178.0	8.4	0.71	0.71	0.51	2.0	8.0	Q1

TAPE AND REEL BOX DIMENSIONS

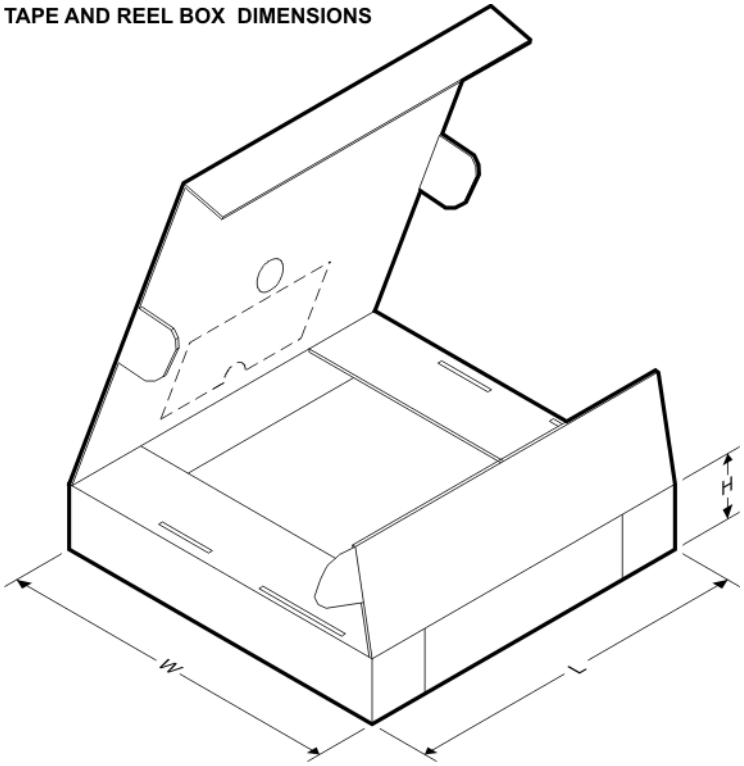

*All dimensions are nominal

Device	Package Type	Package Drawing	Pins	SPQ	Length (mm)	Width (mm)	Height (mm)
LP5907A28YKMR	DSBGA	YKM	4	3000	220.0	220.0	35.0
LP5907A29YKMR	DSBGA	YKM	4	3000	220.0	220.0	35.0
LP5907A33YKMR	DSBGA	YKM	4	3000	220.0	220.0	35.0
LP5907MFX-1.2/NOPB	SOT-23	DBV	5	3000	210.0	185.0	35.0
LP5907MFX-1.5/NOPB	SOT-23	DBV	5	3000	210.0	185.0	35.0
LP5907MFX-1.8/NOPB	SOT-23	DBV	5	3000	210.0	185.0	35.0

Device	Package Type	Package Drawing	Pins	SPQ	Length (mm)	Width (mm)	Height (mm)
LP5907MFX-2.5/NOPB	SOT-23	DBV	5	3000	210.0	185.0	35.0
LP5907MFX-2.8/NOPB	SOT-23	DBV	5	3000	210.0	185.0	35.0
LP5907MFX-2.85/NOPB	SOT-23	DBV	5	3000	210.0	185.0	35.0
LP5907MFX-2.9/NOPB	SOT-23	DBV	5	3000	210.0	185.0	35.0
LP5907MFX-3.0/NOPB	SOT-23	DBV	5	3000	210.0	185.0	35.0
LP5907MFX-3.1/NOPB	SOT-23	DBV	5	3000	210.0	185.0	35.0
LP5907MFX-3.2/NOPB	SOT-23	DBV	5	3000	210.0	185.0	35.0
LP5907MFX-3.3/NOPB	SOT-23	DBV	5	3000	210.0	185.0	35.0
LP5907MFX-4.5/NOPB	SOT-23	DBV	5	3000	210.0	185.0	35.0
LP5907SNX-1.2/NOPB	X2SON	DQN	4	3000	184.0	184.0	19.0
LP5907SNX-1.8/NOPB	X2SON	DQN	4	3000	184.0	184.0	19.0
LP5907SNX-1.9	X2SON	DQN	4	3000	184.0	184.0	19.0
LP5907SNX-2.2/NOPB	X2SON	DQN	4	3000	184.0	184.0	19.0
LP5907SNX-2.5/NOPB	X2SON	DQN	4	3000	184.0	184.0	19.0
LP5907SNX-2.7/NOPB	X2SON	DQN	4	3000	184.0	184.0	19.0
LP5907SNX-2.75	X2SON	DQN	4	3000	184.0	184.0	19.0
LP5907SNX-2.8/NOPB	X2SON	DQN	4	3000	184.0	184.0	19.0
LP5907SNX-2.85/NOPB	X2SON	DQN	4	3000	184.0	184.0	19.0
LP5907SNX-2.9/NOPB	X2SON	DQN	4	3000	184.0	184.0	19.0
LP5907SNX-3.0/NOPB	X2SON	DQN	4	3000	184.0	184.0	19.0
LP5907SNX-3.1/NOPB	X2SON	DQN	4	3000	184.0	184.0	19.0
LP5907SNX-3.2/NOPB	X2SON	DQN	4	3000	184.0	184.0	19.0
LP5907SNX-3.3/NOPB	X2SON	DQN	4	3000	184.0	184.0	19.0
LP5907SNX-4.0/NOPB	X2SON	DQN	4	3000	184.0	184.0	19.0
LP5907SNX-4.5/NOPB	X2SON	DQN	4	3000	184.0	184.0	19.0
LP5907UVE-1.2/NOPB	DSBGA	YKE	4	250	210.0	185.0	35.0
LP5907UVE-1.2/NOPB	DSBGA	YKE	4	250	220.0	220.0	35.0
LP5907UVE-1.8/NOPB	DSBGA	YKE	4	250	210.0	185.0	35.0
LP5907UVE-1.8/NOPB	DSBGA	YKE	4	250	220.0	220.0	35.0
LP5907UVE-2.8/NOPB	DSBGA	YKE	4	250	210.0	185.0	35.0
LP5907UVE-2.8/NOPB	DSBGA	YKE	4	250	220.0	220.0	35.0
LP5907UVE-3.0/NOPB	DSBGA	YKE	4	250	210.0	185.0	35.0
LP5907UVE-3.0/NOPB	DSBGA	YKE	4	250	220.0	220.0	35.0
LP5907UVE-3.1/NOPB	DSBGA	YKE	4	250	220.0	220.0	35.0
LP5907UVE-3.1/NOPB	DSBGA	YKE	4	250	210.0	185.0	35.0
LP5907UVE-3.2/NOPB	DSBGA	YKE	4	250	220.0	220.0	35.0
LP5907UVE-3.2/NOPB	DSBGA	YKE	4	250	210.0	185.0	35.0
LP5907UVE-3.3/NOPB	DSBGA	YKE	4	250	210.0	185.0	35.0
LP5907UVE-3.3/NOPB	DSBGA	YKE	4	250	220.0	220.0	35.0
LP5907UVE-4.5/NOPB	DSBGA	YKE	4	250	210.0	185.0	35.0
LP5907UVE-4.5/NOPB	DSBGA	YKE	4	250	220.0	220.0	35.0
LP5907UVX-1.2/NOPB	DSBGA	YKE	4	3000	220.0	220.0	35.0
LP5907UVX-1.2/NOPB	DSBGA	YKE	4	3000	210.0	185.0	35.0
LP5907UVX-1.6/NOPB	DSBGA	YKE	4	3000	220.0	220.0	35.0

Device	Package Type	Package Drawing	Pins	SPQ	Length (mm)	Width (mm)	Height (mm)
LP5907UVX-1.8/NOPB	DSBGA	YKE	4	3000	210.0	185.0	35.0
LP5907UVX-1.8/NOPB	DSBGA	YKE	4	3000	220.0	220.0	35.0
LP5907UVX-2.2/NOPB	DSBGA	YKE	4	3000	220.0	220.0	35.0
LP5907UVX-2.5/NOPB	DSBGA	YKE	4	3000	210.0	185.0	35.0
LP5907UVX-2.8/NOPB	DSBGA	YKE	4	3000	220.0	220.0	35.0
LP5907UVX-2.8/NOPB	DSBGA	YKE	4	3000	210.0	185.0	35.0
LP5907UVX-2.85/NOPB	DSBGA	YKE	4	3000	220.0	220.0	35.0
LP5907UVX-2.85/NOPB	DSBGA	YKE	4	3000	210.0	185.0	35.0
LP5907UVX-3.0/NOPB	DSBGA	YKE	4	3000	220.0	220.0	35.0
LP5907UVX-3.0/NOPB	DSBGA	YKE	4	3000	210.0	185.0	35.0
LP5907UVX-3.1/NOPB	DSBGA	YKE	4	3000	210.0	185.0	35.0
LP5907UVX-3.1/NOPB	DSBGA	YKE	4	3000	220.0	220.0	35.0
LP5907UVX-3.2/NOPB	DSBGA	YKE	4	3000	220.0	220.0	35.0
LP5907UVX-3.2/NOPB	DSBGA	YKE	4	3000	210.0	185.0	35.0
LP5907UVX-3.3/NOPB	DSBGA	YKE	4	3000	220.0	220.0	35.0
LP5907UVX-3.3/NOPB	DSBGA	YKE	4	3000	210.0	185.0	35.0
LP5907UVX-4.5/NOPB	DSBGA	YKE	4	3000	210.0	185.0	35.0
LP5907UVX-4.5/NOPB	DSBGA	YKE	4	3000	220.0	220.0	35.0
LP5907UVX19/NOPB	DSBGA	YKE	4	3000	210.0	185.0	35.0
LP5907UVX19/NOPB	DSBGA	YKE	4	3000	220.0	220.0	35.0
LP5907UVX37/NOPB	DSBGA	YKE	4	3000	220.0	220.0	35.0
LP5907UVX37/NOPB	DSBGA	YKE	4	3000	210.0	185.0	35.0

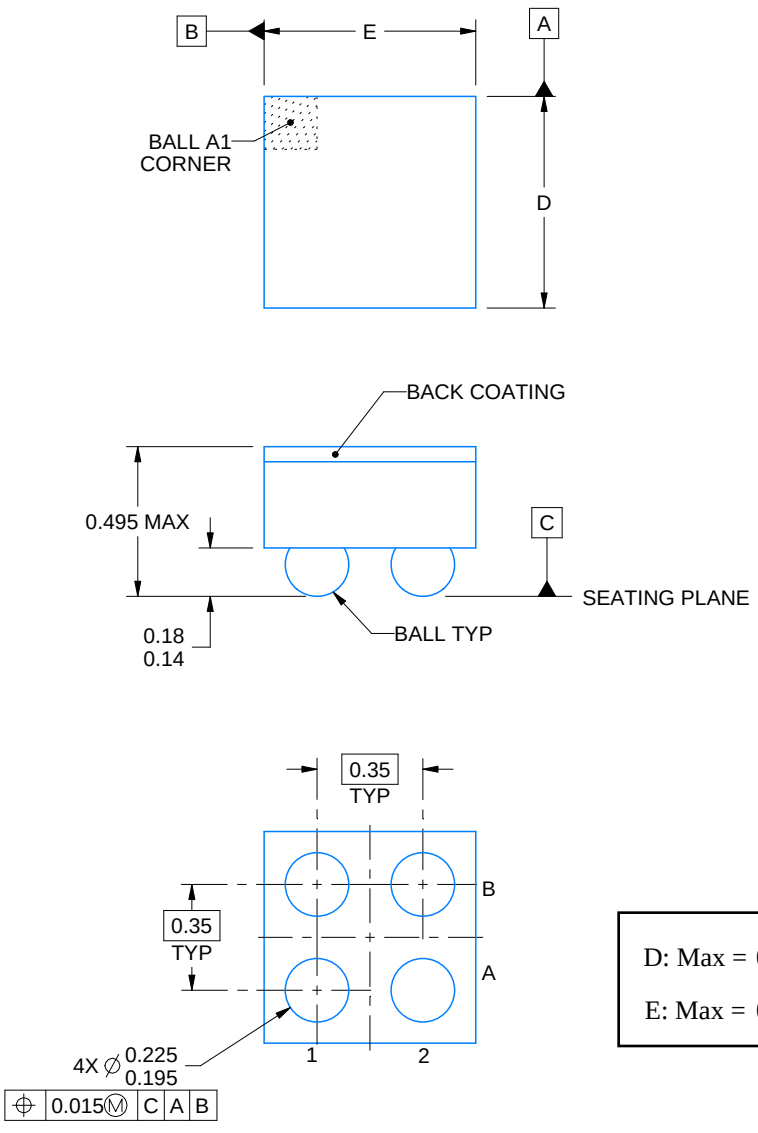

D: Max = 0.675 mm, Min =0.615 mm

E: Max = 0.675 mm, Min =0.615 mm

4223494/A 11/2014

NOTES:

1. All linear dimensions are in millimeters. Any dimensions in parenthesis are for reference only. Dimensioning and tolerancing per ASME Y14.5M.
2. This drawing is subject to change without notice.

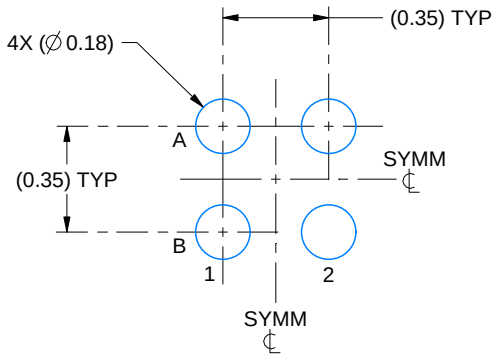

LAND PATTERN EXAMPLE
EXPOSED METAL SHOWN
SCALE:40X

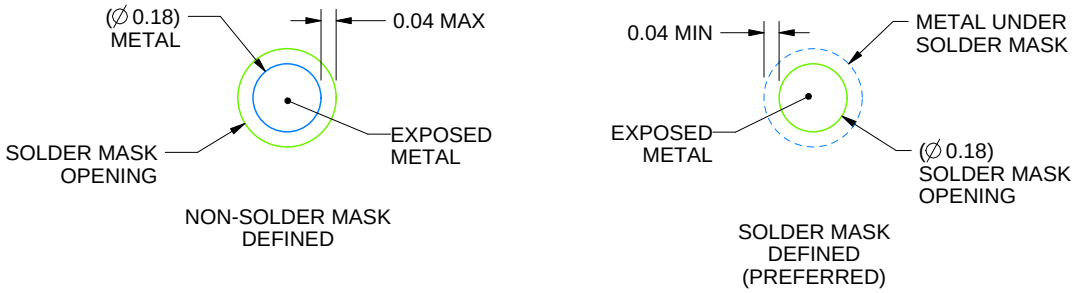

SOLDER MASK DETAILS
NOT TO SCALE

4223494/A 11/2014

NOTES: (continued)

3. Final dimensions may vary due to manufacturing tolerance considerations and also routing constraints.
Refer to Texas Instruments Literature No. SNVA009 (www.ti.com/lit/snva009).

EXAMPLE STENCIL DESIGN

YKM0004

DSBGA - 0.495 mm max height

DIE SIZE BALL GRID ARRAY

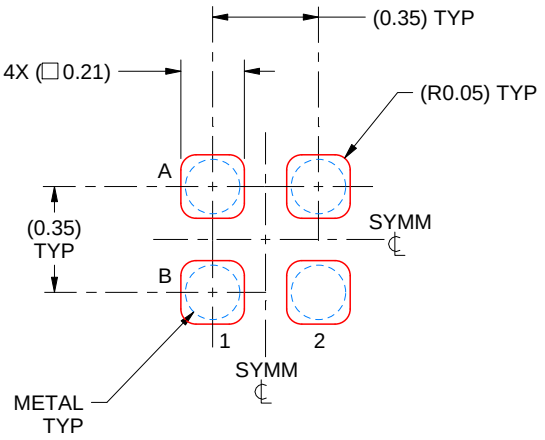

SOLDER PASTE EXAMPLE
BASED ON 0.075 - 0.1mm THICK STENCIL
SCALE:40X

4223494/A 11/2014

NOTES: (continued)

4. Laser cutting apertures with trapezoidal walls and rounded corners may offer better paste release.

PACKAGE OUTLINE

YKE0004

DSBGA - 0.445mm max height

DIE SIZE BALL GRID ARRAY

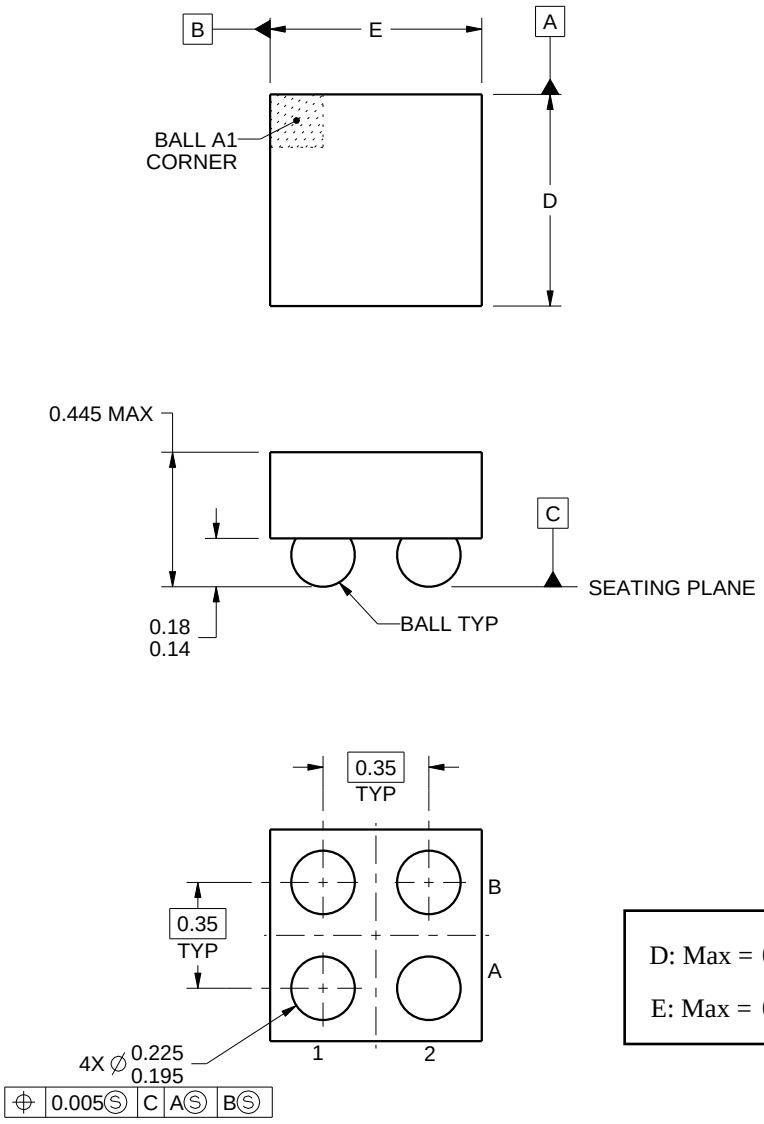

D: Max = 0.675 mm, Min =0.615 mm

E: Max = 0.675 mm, Min =0.615 mm

4220102/A 11/2014

NOTES:

1. All linear dimensions are in millimeters. Any dimensions in parenthesis are for reference only. Dimensioning and tolerancing per ASME Y14.5M.
2. This drawing is subject to change without notice.

EXAMPLE BOARD LAYOUT

YKE0004

DSBGA - 0.445mm max height

DIE SIZE BALL GRID ARRAY

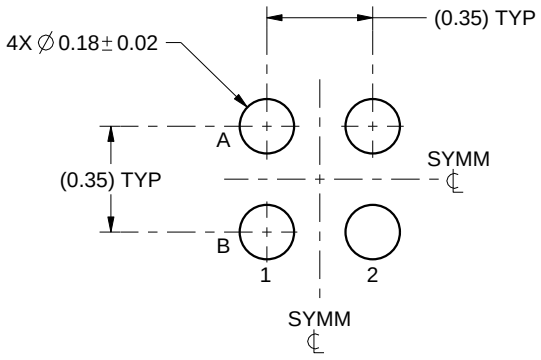

LAND PATTERN EXAMPLE
SCALE:40X

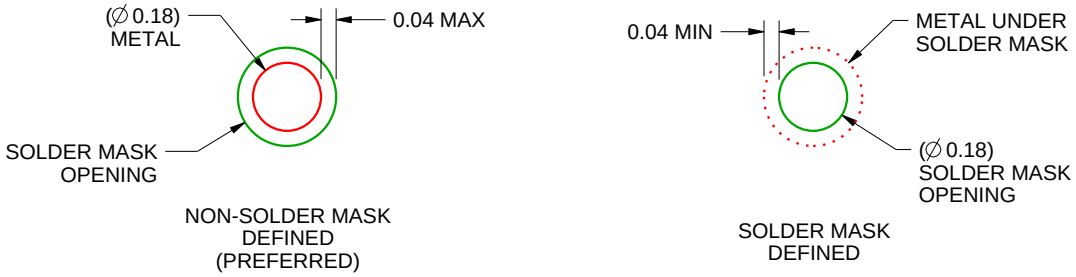

SOLDER MASK DETAILS
NOT TO SCALE

4220102/A 11/2014

NOTES: (continued)

3. Final dimensions may vary due to manufacturing tolerance considerations and also routing constraints.
   Refer to Texas Instruments Literature No. SNVA009 (www.ti.com/lit/snva009).

EXAMPLE STENCIL DESIGN

YKE0004

DSBGA - 0.445mm max height

DIE SIZE BALL GRID ARRAY

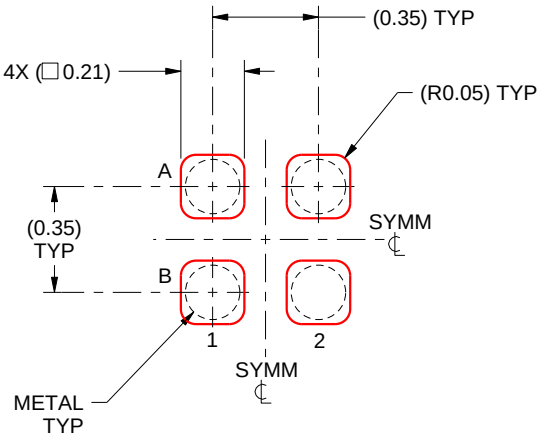

SOLDER PASTE EXAMPLE
BASED ON 0.075 - 0.1mm THICK STENCIL
SCALE:40X

4220102/A 11/2014

NOTES: (continued)

4. Laser cutting apertures with trapezoidal walls and rounded corners may offer better paste release.

PACKAGE OUTLINE

DBV0005A

SOT-23 - 1.45 mm max height

SMALL OUTLINE TRANSISTOR

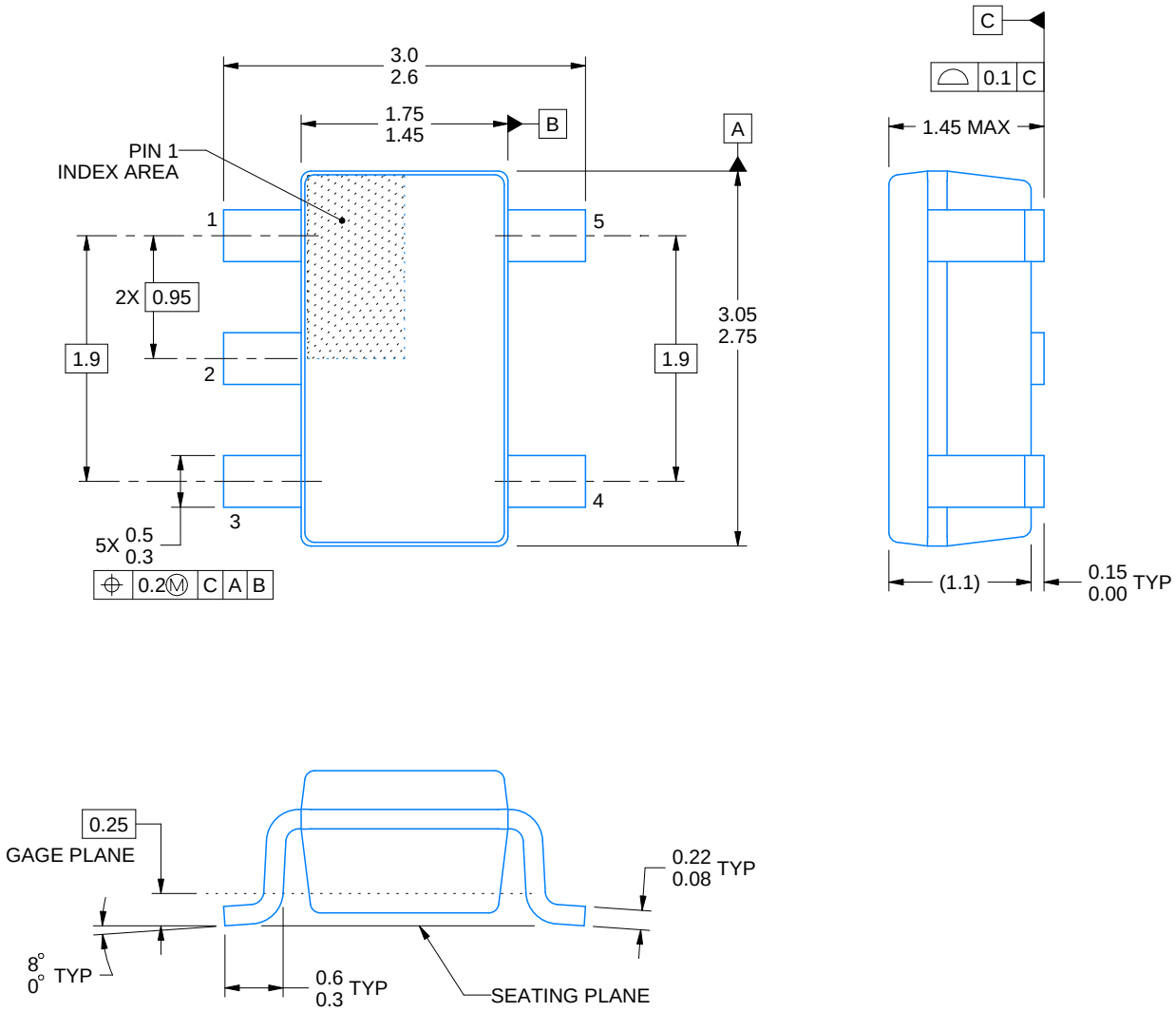

4214839/D 11/2018

NOTES:

1. All linear dimensions are in millimeters. Any dimensions in parenthesis are for reference only. Dimensioning and tolerancing per ASME Y14.5M.
2. This drawing is subject to change without notice.
3. Refernce JEDEC MO-178.
4. Body dimensions do not include mold flash, protrusions, or gate burrs. Mold flash, protrusions, or gate burrs shall not exceed 0.15 mm per side.

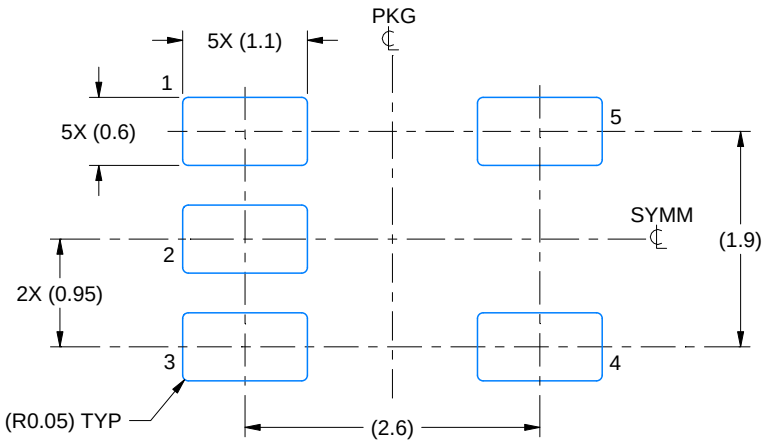

LAND PATTERN EXAMPLE
EXPOSED METAL SHOWN
SCALE:15X

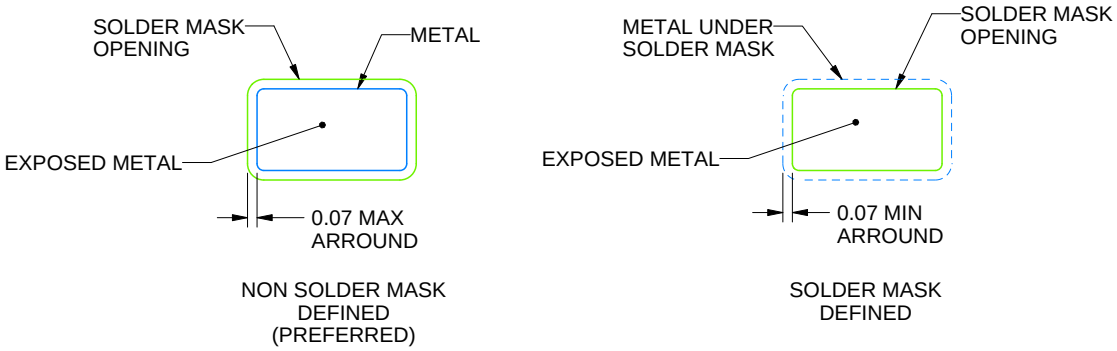

SOLDER MASK DETAILS

4214839/D 11/2018

NOTES: (continued)

5. Publication IPC-7351 may have alternate designs.
6. Solder mask tolerances between and around signal pads can vary based on board fabrication site.

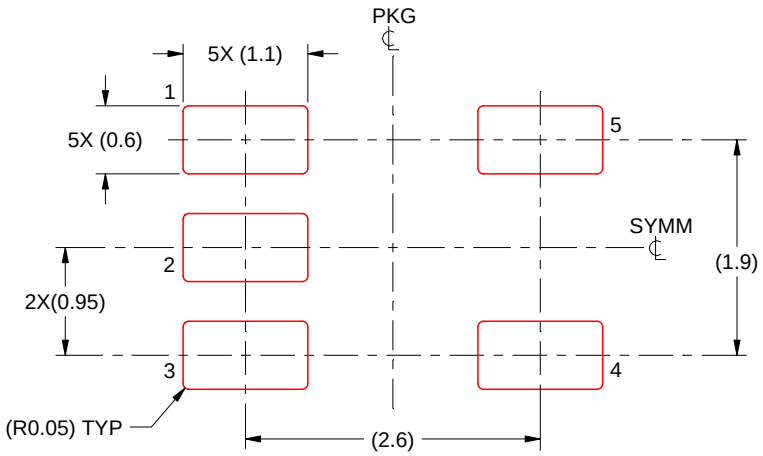

SOLDER PASTE EXAMPLE
BASED ON 0.125 mm THICK STENCIL
SCALE:15X

4214839/D 11/2018

NOTES: (continued)

7. Laser cutting apertures with trapezoidal walls and rounded corners may offer better paste release. IPC-7525 may have alternate design recommendations.
8. Board assembly site may have different recommendations for stencil design.

PACKAGE OUTLINE

DQN0004A

X2SON - 0.4 mm max height

PLASTIC SMALL OUTLINE - NO LEAD

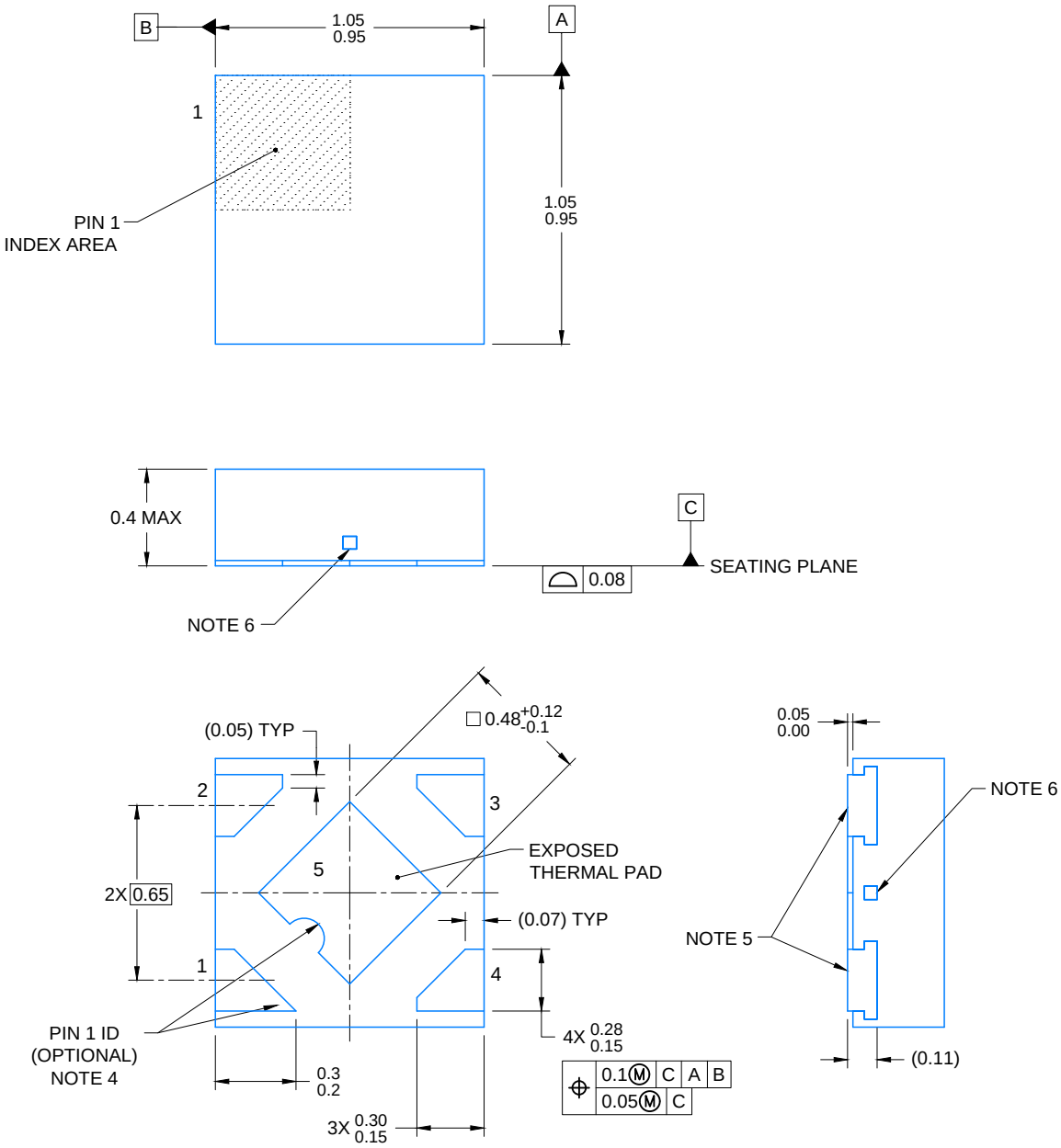

NOTES:

1. All linear dimensions are in millimeters. Any dimensions in parenthesis are for reference only. Dimensioning and tolerancing per ASME Y14.5M.
2. This drawing is subject to change without notice.
3. The package thermal pad must be soldered to the printed circuit board for optimal thermal and mechanical performance.
4. Features may not exist. Recommend use of pin 1 marking on top of package for orientation purposes.
5. Shape of exposed side leads may differ.
6. Number and location of exposed tie bars may vary.

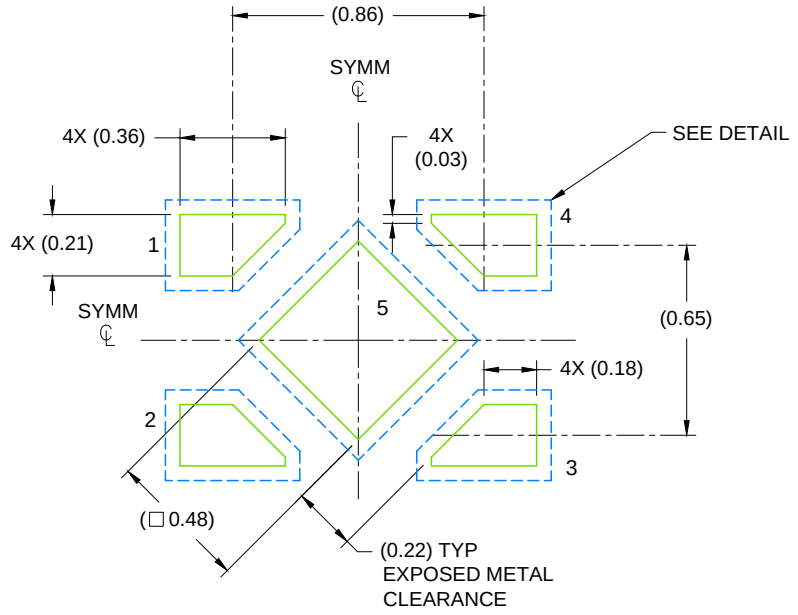

LAND PATTERN EXAMPLE

SCALE: 40X

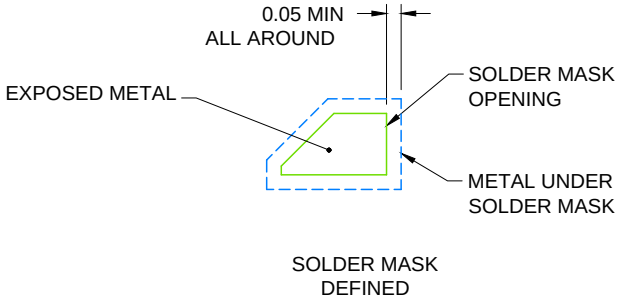

SOLDER MASK DETAIL

4215302/E 12/2016

NOTES: (continued)

7. This package is designed to be soldered to a thermal pad on the board. For more information, see Texas Instruments literature number SLUA271 (www.ti.com/lit/slua271).
8. If any vias are implemented, it is recommended that vias under paste be filled, plugged or tented.

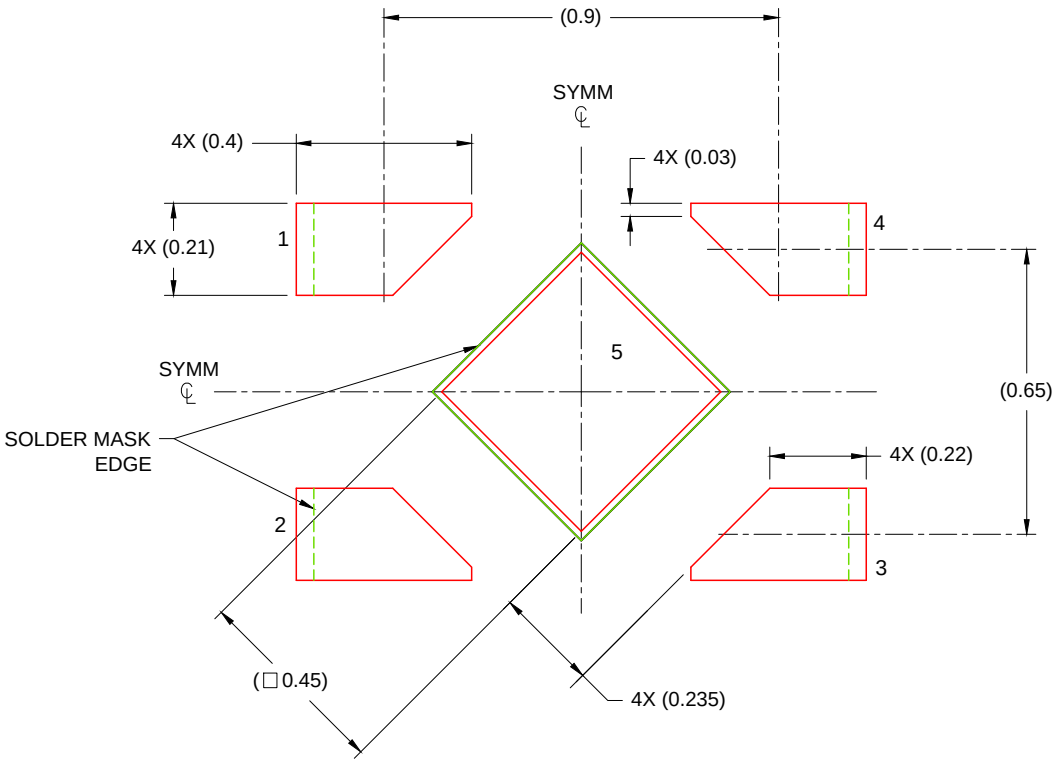

SOLDER PASTE EXAMPLE
BASED ON 0.075 - 0.1mm THICK STENCIL

EXPOSED PAD
88% PRINTED SOLDER COVERAGE BY AREA
SCALE: 60X

4215302/E 12/2016

NOTES: (continued)

9. Laser cutting apertures with trapezoidal walls and rounded corners may offer better paste release. IPC-7525 may have alternate design recommendations.

IMPORTANT NOTICE AND DISCLAIMER

TI PROVIDES TECHNICAL AND RELIABILITY DATA (INCLUDING DATASHEETS), DESIGN RESOURCES (INCLUDING REFERENCE DESIGNS), APPLICATION OR OTHER DESIGN ADVICE, WEB TOOLS, SAFETY INFORMATION, AND OTHER RESOURCES “AS IS” AND WITH ALL FAULTS, AND DISCLAIMS ALL WARRANTIES, EXPRESS AND IMPLIED, INCLUDING WITHOUT LIMITATION ANY IMPLIED WARRANTIES OF MERCHANTABILITY, FITNESS FOR A PARTICULAR PURPOSE OR NON-INFRINGEMENT OF THIRD PARTY INTELLECTUAL PROPERTY RIGHTS.

These resources are intended for skilled developers designing with TI products. You are solely responsible for (1) selecting the appropriate TI products for your application, (2) designing, validating and testing your application, and (3) ensuring your application meets applicable standards, and any other safety, security, or other requirements. These resources are subject to change without notice. TI grants you permission to use these resources only for development of an application that uses the TI products described in the resource. Other reproduction and display of these resources is prohibited. No license is granted to any other TI intellectual property right or to any third party intellectual property right. TI disclaims responsibility for, and you will fully indemnify TI and its representatives against, any claims, damages, costs, losses, and liabilities arising out of your use of these resources.

TI’s products are provided subject to TI’s Terms of Sale (www.ti.com/legal/termsofsale.html) or other applicable terms available either on ti.com or provided in conjunction with such TI products. TI’s provision of these resources does not expand or otherwise alter TI’s applicable warranties or warranty disclaimers for TI products.

Mailing Address: Texas Instruments, Post Office Box 655303, Dallas, Texas 75265
Copyright © 2019, Texas Instruments Incorporated