User's Guide
SNVU650–May 2019

LP5012EVM User's Guide

This user's guide describes the characteristics, setup, and use of the LP5012EVM evaluation module (EVM). The LP5012EVM helps the user evaluate the features of the Texas Instruments LP5012 device, which is an I^2C bus-controlled, 12-channel, constant-current LED driver. This user's guide includes setup instructions, a schematic diagram, a bill of materials, printed-circuit board layout drawings, and software instructions.

The LP5012EVM can be converted for testing the LP5009 device by removing the factory-installed device (U1) and replacing it with the LP5009 counterpart. When testing the LP5009 device, select the corresponding LP5009 tag from the menu on the GUI home page (Figure 5) for the evaluation.

Contents

1 What You Get 2
2 What You Need In Addition 4
3 How to Get Started 4
4 Board Layout 15

List of Figures

1 LP5012EVM Kit 2
2 LP5012EVM Key Connectors 3
3 LP5012EVM Hardware Setup 4
4 LP5012EVM USB Cable Direction 5
5 LP50 Family GUI Home Page 6
6 Landing Page of LP5012EVM GUI 6
7 LED Control Panel 7
8 LP50 EVM GUI Connection Status 8
9 LP50xx Global Setting 9
10 LED Color and Brightness Setting 10
11 Bank Management Entry 11
12 Bank Setting 11
13 LED Lighting Pattern 12
14 Register Map 13
15 Tool Bar 14
16 Top Layer Routing 15
17 Bottom Layer Routing (Mirrored) 16
18 LP5012EVM Schematic Diagram 17

List of Tables

1 LP5012EVM Parameters 3
2 Bill of Materials (BOM) 18

Trademarks

All trademarks are the property of their respective owners.

Copyright © 2019, Texas Instruments Incorporated

1 What You Get

The LP5012EVM kit (Figure 1) contains:

- USB2ANY
  - Ribbon cable
  - USB cable
- LP5012EVM

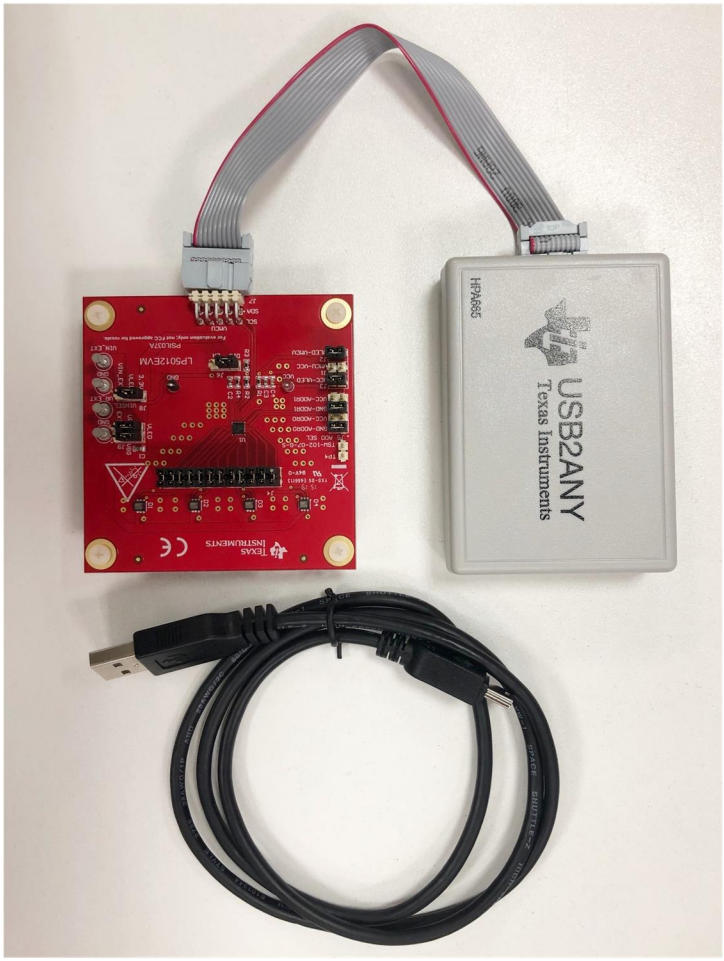

Figure 1. LP5012EVM Kit

Copyright © 2019, Texas Instruments Incorporated

Figure 2 shows the key connectors used to operate LP5012EVM.

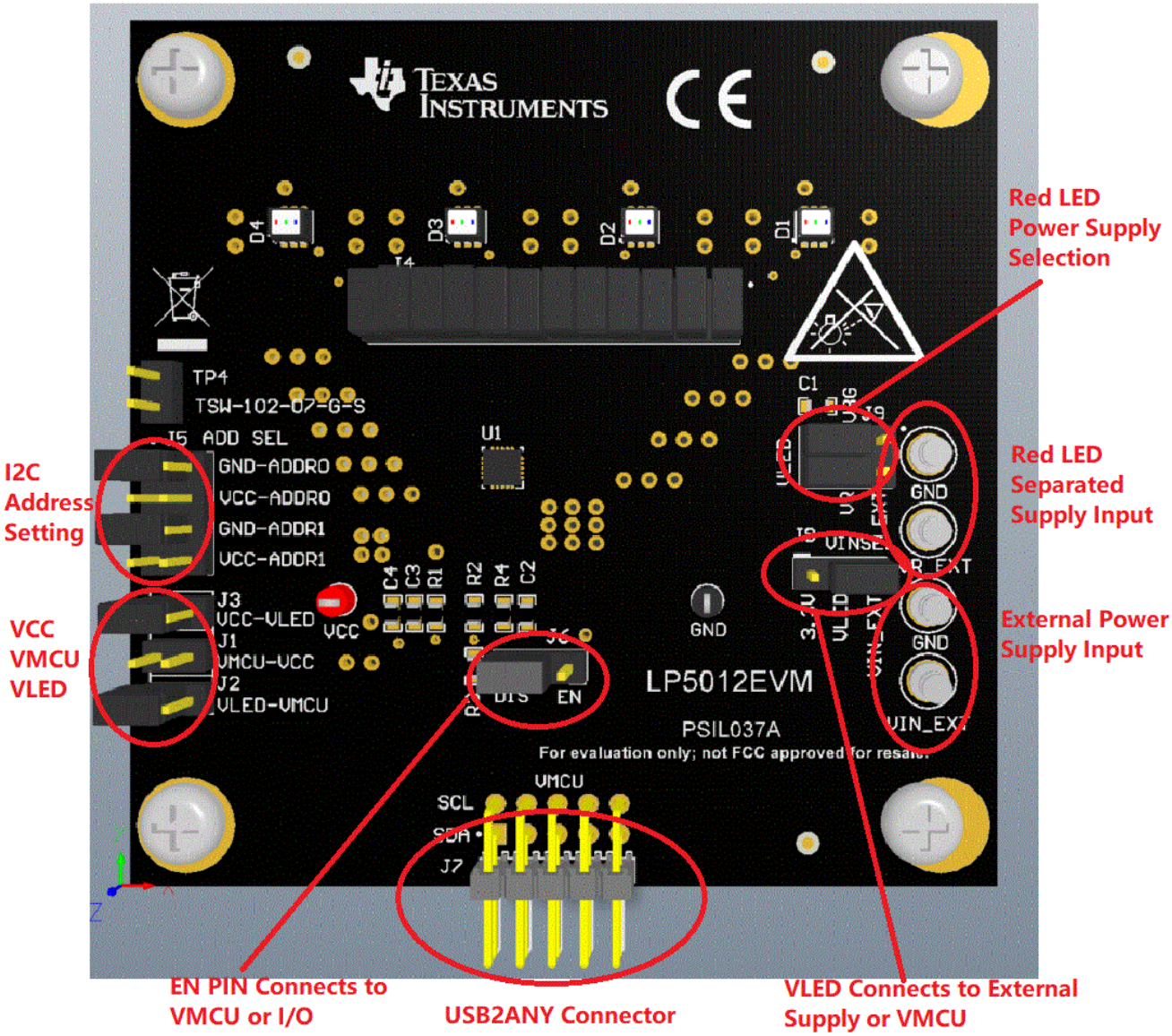

Figure 2. LP5012EVM Key Connectors

Table 1. LP5012EVM Parameters

PARAMETER	RANGE
VCC	3 V–5.5 V
VLED	3 V–5.5 V
VMCU	1.8 V, 3.3 V, 5 V
Channel current	35 mA (maximum)

Note: Channel current is set at 20 mA when the LED supply voltage is 5 V. Although the LP5012 device can withstand 6-V maximum LED supply voltage with 35 mA per channel, make sure that the PCB thermal performance can meet the power dissipation requirement, because increased LED supply voltage increases channel output current.

Copyright © 2019, Texas Instruments Incorporated

2 What You Need In Addition

A PC on which to install the LP50EVM GUI (click here to download software)

DC supply

3 How to Get Started

3.1 Hardware Setup

Figure 3 shows the hardware setup of the LP5012EVM.

- Connect a 5-V power supply to TP1 (VIN_EXT) and TP6 (GND).
- Using the USB cable, connect the USB2ANY module to the PC.
- Using the ribbon cable, connect the USB2ANY module to the LP5012EVM.

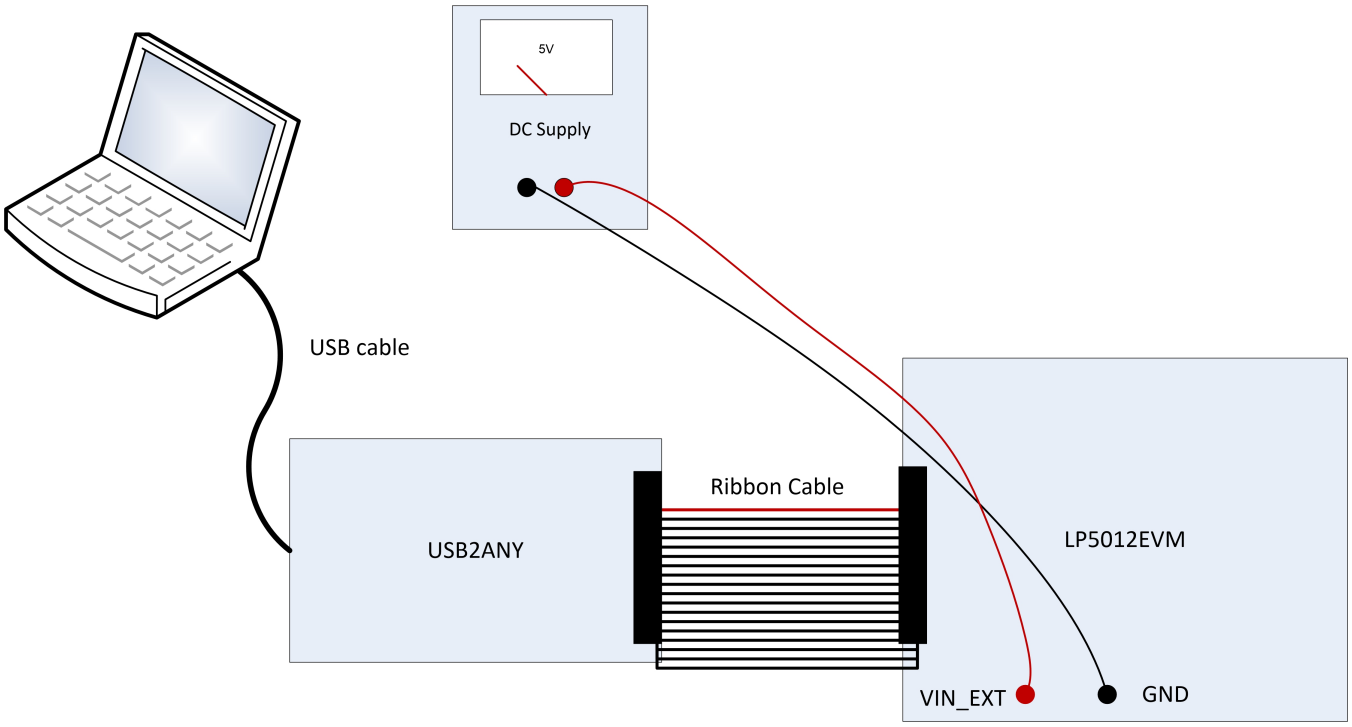

Figure 3. LP5012EVM Hardware Setup

Copyright © 2019, Texas Instruments Incorporated

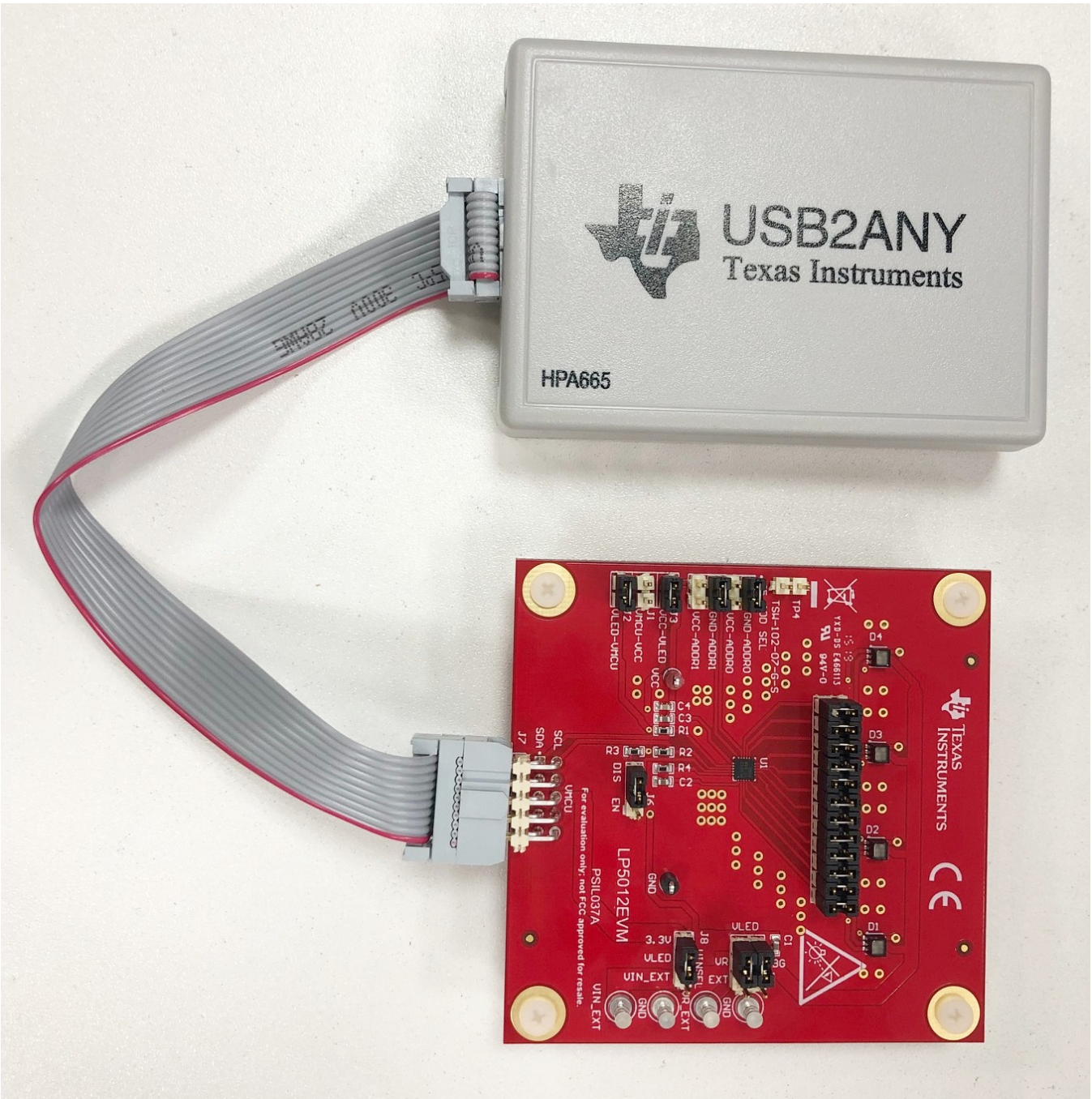

Figure 4. LP5012EVM USB Cable Direction

3.2 Software Installation

Download the GUI software from the product folder. After downloading, install the LP50EVM GUI on the PC. A shortcut to the GUI will be found on the desktop. A shortcut can also be found in the startup menu under the Texas Instruments folder. Figure 6 shows the landing page of the LP50EVM GUI. The landing page contains the LP50xx introduction information and LP5012EVM information. Clicking the menu icon (≡) shows more information.

Copyright © 2019, Texas Instruments Incorporated

Figure 5. LP50 Family GUI Home Page

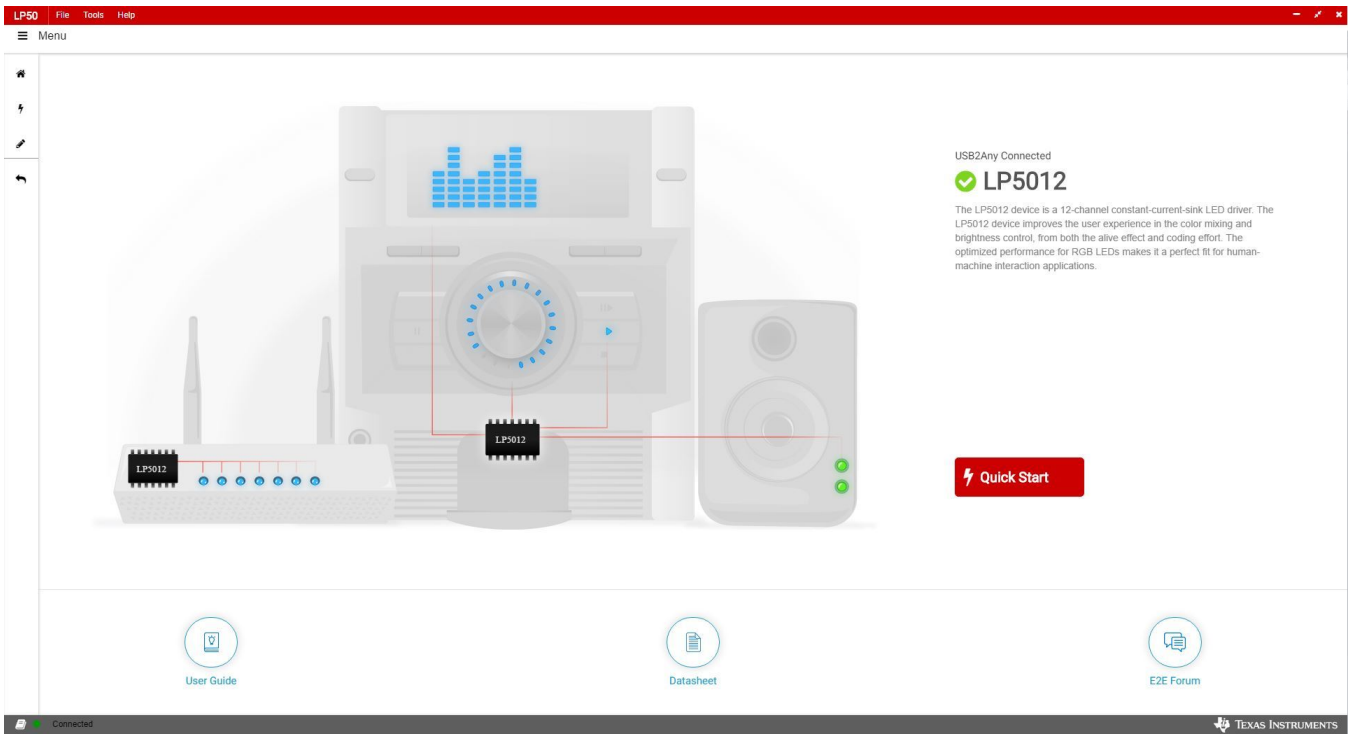

Figure 6. Landing Page of LP5012EVM GUI

Copyright © 2019, Texas Instruments Incorporated

3.3 GUI Function

Click the Quick Start button in the lower-right corner. The GUI displays a detailed LED control panel as shown in Figure 7.

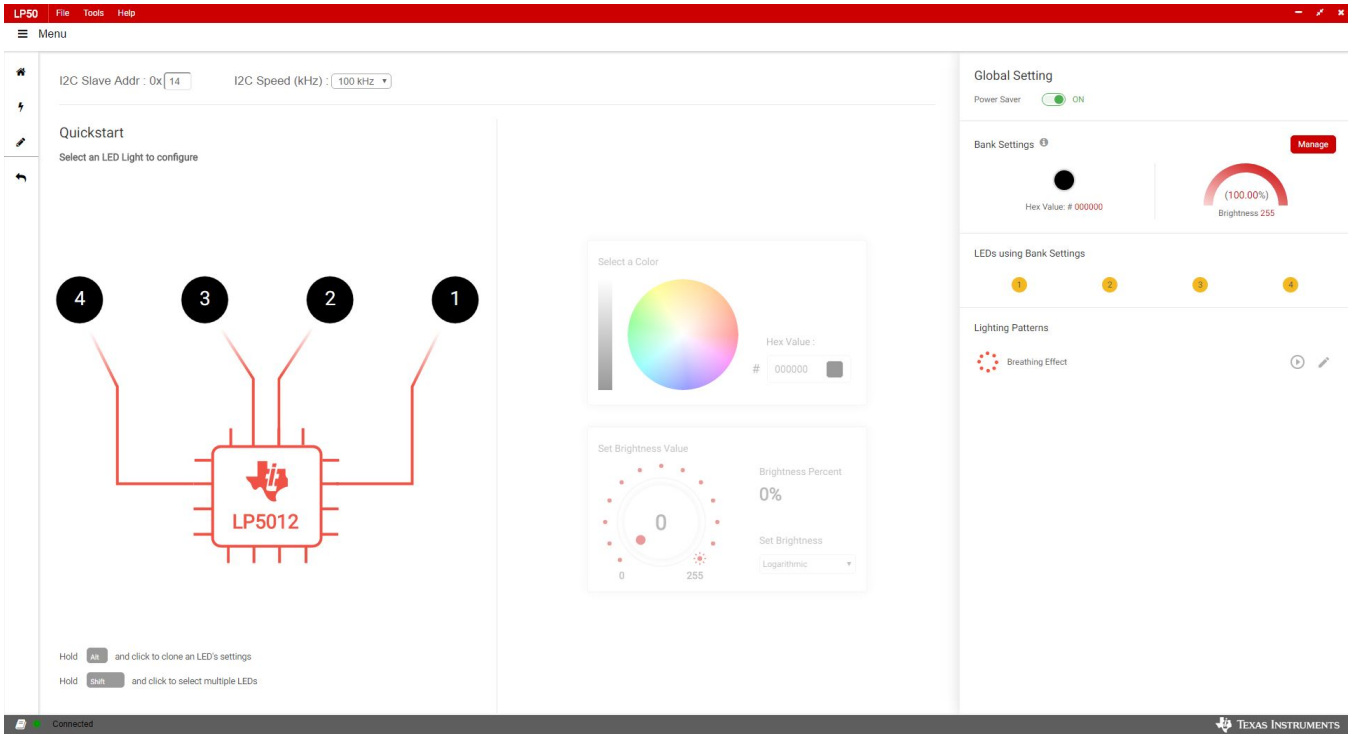

Figure 7. LED Control Panel

Copyright © 2019, Texas Instruments Incorporated

3.3.1 Connection Status

Before using the GUI, make sure the connection status indicator at the bottom left corner is *green*, which means the USB2ANY is connected to the computer successfully. If the status indicator is *red*, try to reconnect the USB2ANY cable and restart the LP50EVM GUI.

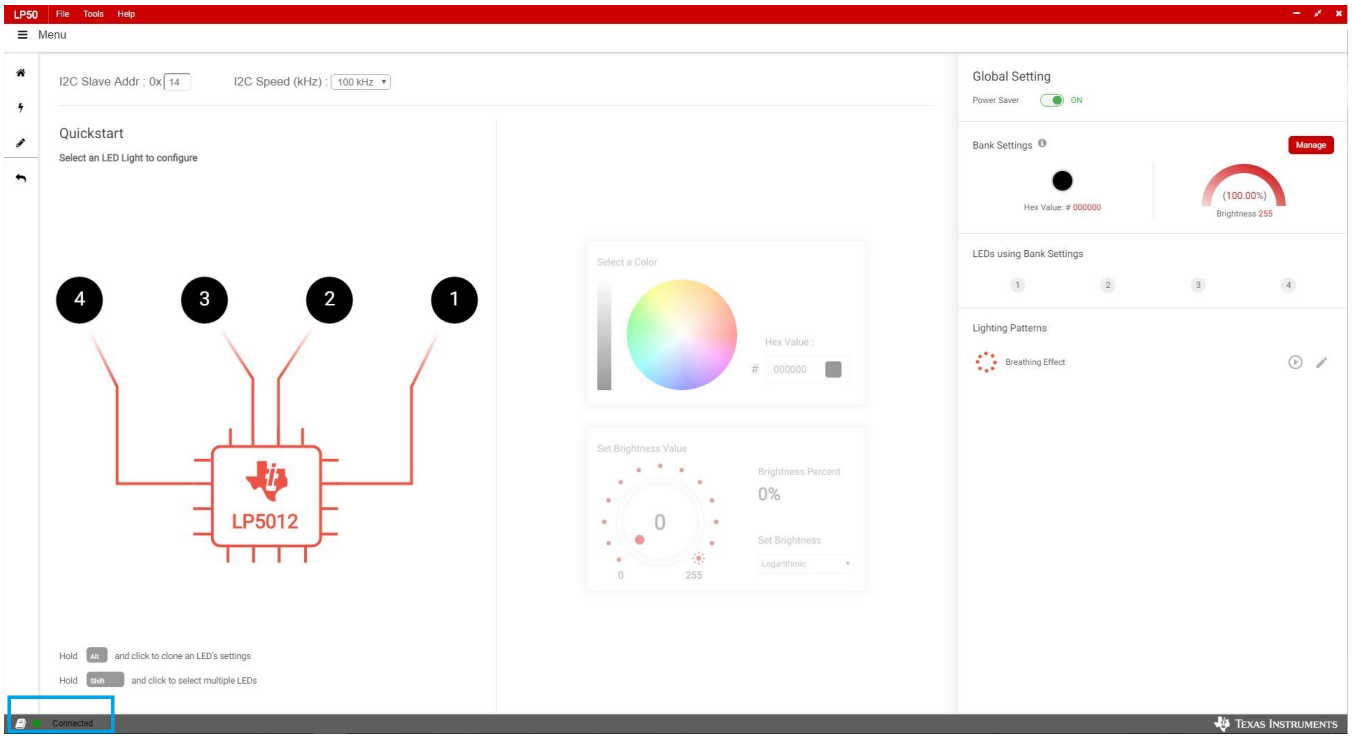

Figure 8. LP50 EVM GUI Connection Status

Copyright © 2019, Texas Instruments Incorporated

3.3.2 GUI Functions

3.3.2.1 Global Setting

When all the LED outputs are inactive, the LP50xx device is able to enter power-save mode automatically, thus lowering idle-current consumption down to 10 µA (typical). The automatic power-save mode is enabled when register bit Power_Save_EN = 1 (default) and all the LEDs are off for a duration of > 30 ms. Almost all analog blocks are powered down in power-save mode. If any I^2C command to the device occurs, the LP50xx device returns to the NORMAL mode. Set the Power Saver switch to activate the function (see Figure 8).

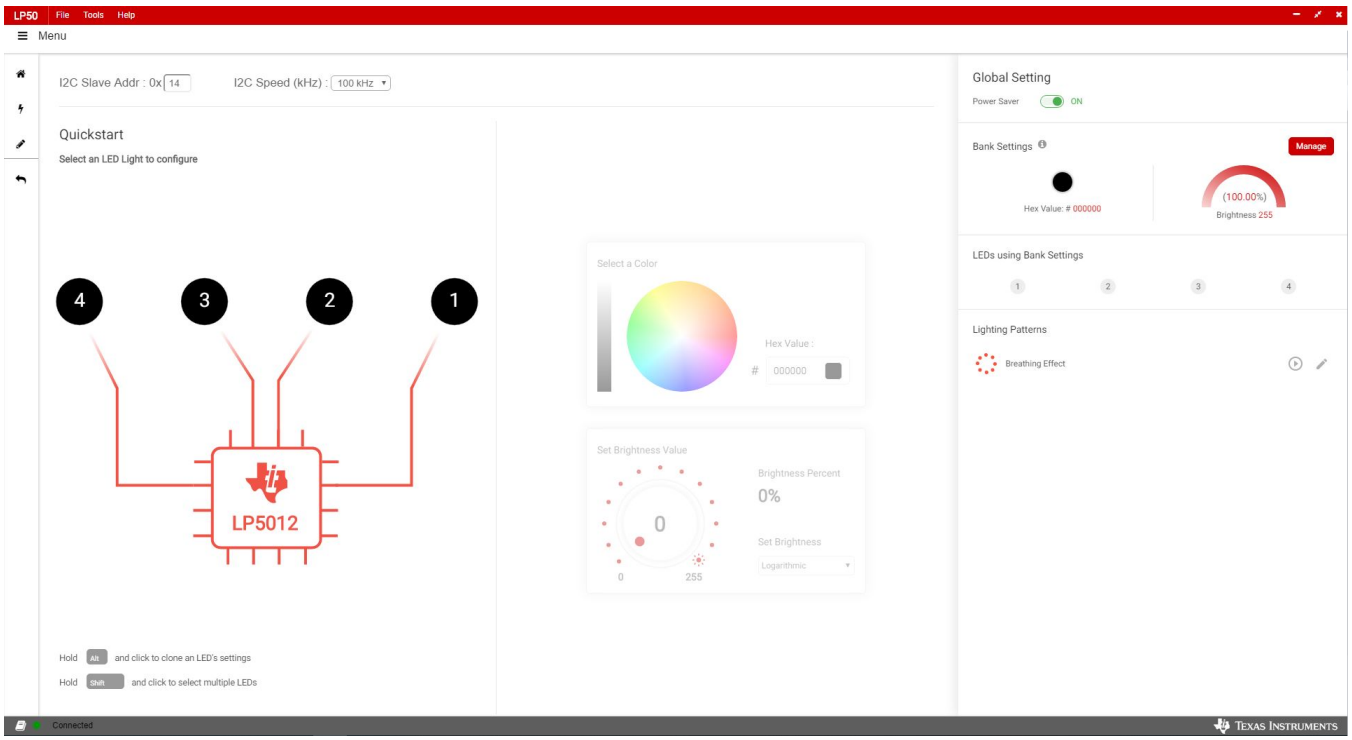

Figure 9. LP50xx Global Setting

Copyright © 2019, Texas Instruments Incorporated

3.3.2.2 RGB LED Color and Intensity Control

Each output channel has its own individual 8-bit color-setting register (OUTx_COLOR). The device allows every RGB LED module to achieve > 16 million (256 × 256 × 256) color-mixing. When color is fixed, the independent *intensity control*, formerly called brightness control, is used to achieve accurate and flexible dimming control for every RGB LED module. Every three consecutive output channels are assigned to their respective intensity-control register (LEDx_BRIGHTNESS). The LP50xx device allows 256-step intensity control for each RGB LED module, which helps achieve a smooth dimming effect. For human-eye-friendly visual performance, a logarithmic-scale dimming curve is usually implemented in LED drivers. The LP50xx device, with independent color-mixing and intensity-control registers, implements the logarithmic scale dimming control inside the intensity control function, which solves the color distortion issue effectively. Also, the LP50xx device allows users to configure the dimming scale either logarithmically or linearly through the global Log_Scale_EN register. Click the Manage button, shown in Figure 10. to set the color and brightness.

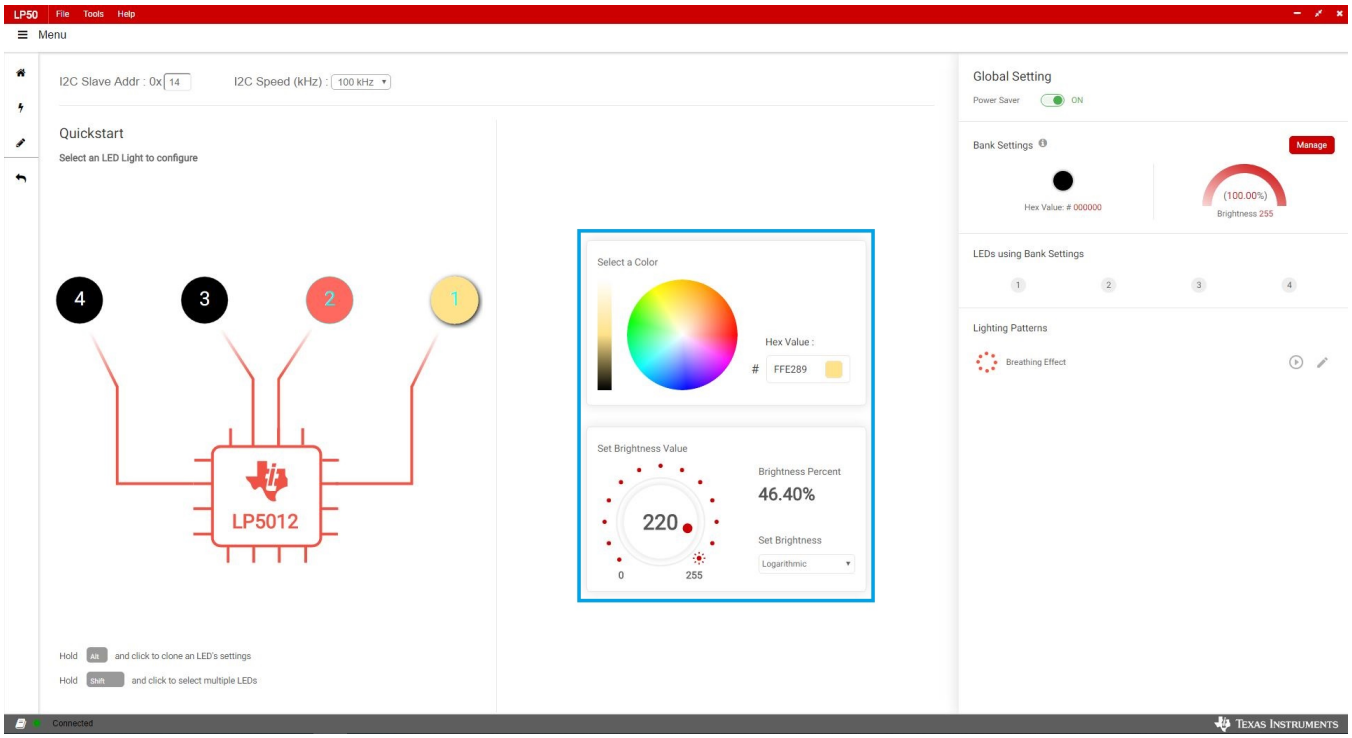

Figure 10. LED Color and Brightness Setting

3.3.2.3 Bank Management

For most LED-animation effects, like blinking and breathing, all the RGB LEDs have the same lighting pattern. Instead of controlling the individual LED separately, which occupies the microcontroller resources heavily, the LP50xx device provides an easy coding approach, the LED bank control. Each channel can be configured as either independent control or bank control through the LEDx_Bank_EN register. When LEDx_Bank_EN = 0 (default), the LED is controlled independently by the related color-mixing and intensity-control registers. When LEDx_Bank_EN = 1, the LP50xx device drives the LED in LED bank-control mode. The LED bank has its own independent PWM control scheme, which is the same structure as the PWM scheme of each channel. See the register map Figure 14 for more details. When a channel is configured in LED bank-control mode, the related color mixing and intensity control is governed by the bank control registers (BANK_A_COLOR, BANK_B_COLOR, BANK_C_COLOR, and BANK_BRIGHTNESS) regardless of the inputs on its own color-mixing and intensity-control registers.

Copyright © 2019, Texas Instruments Incorporated

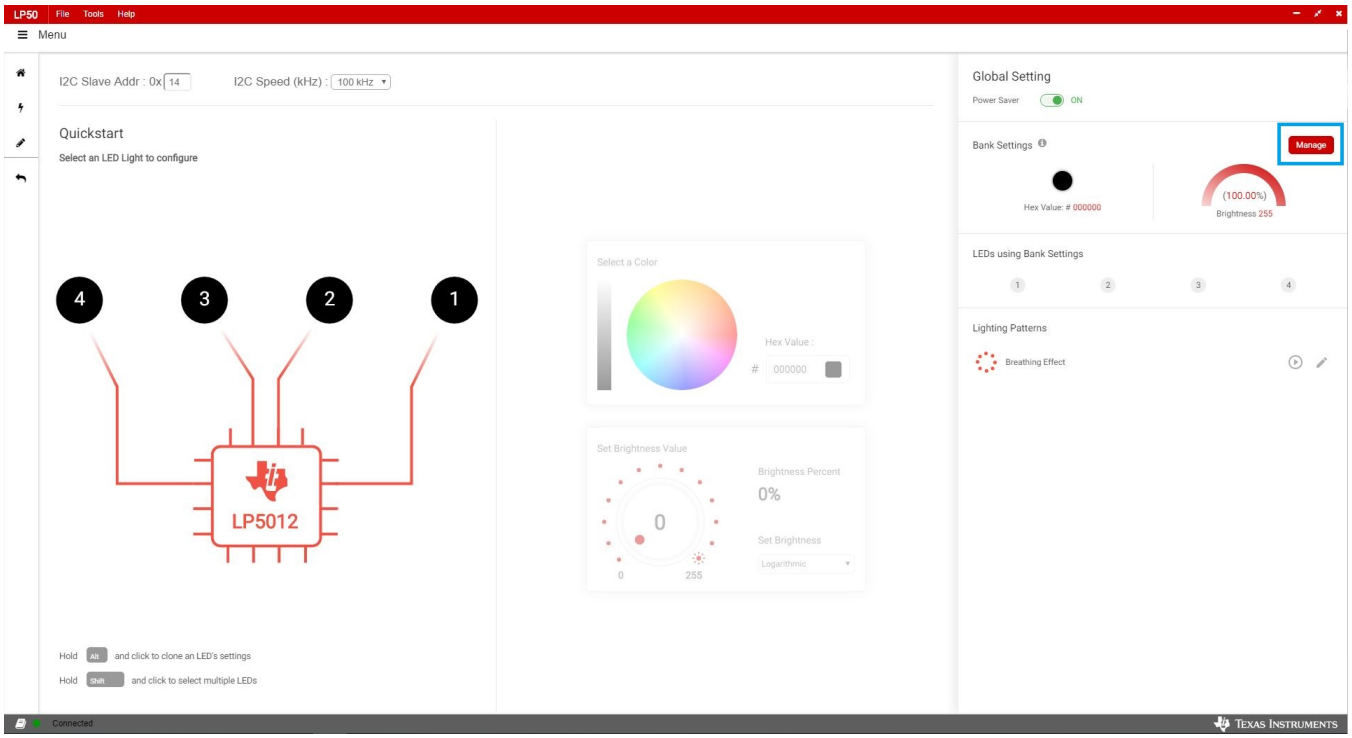

Figure 11. Bank Management Entry

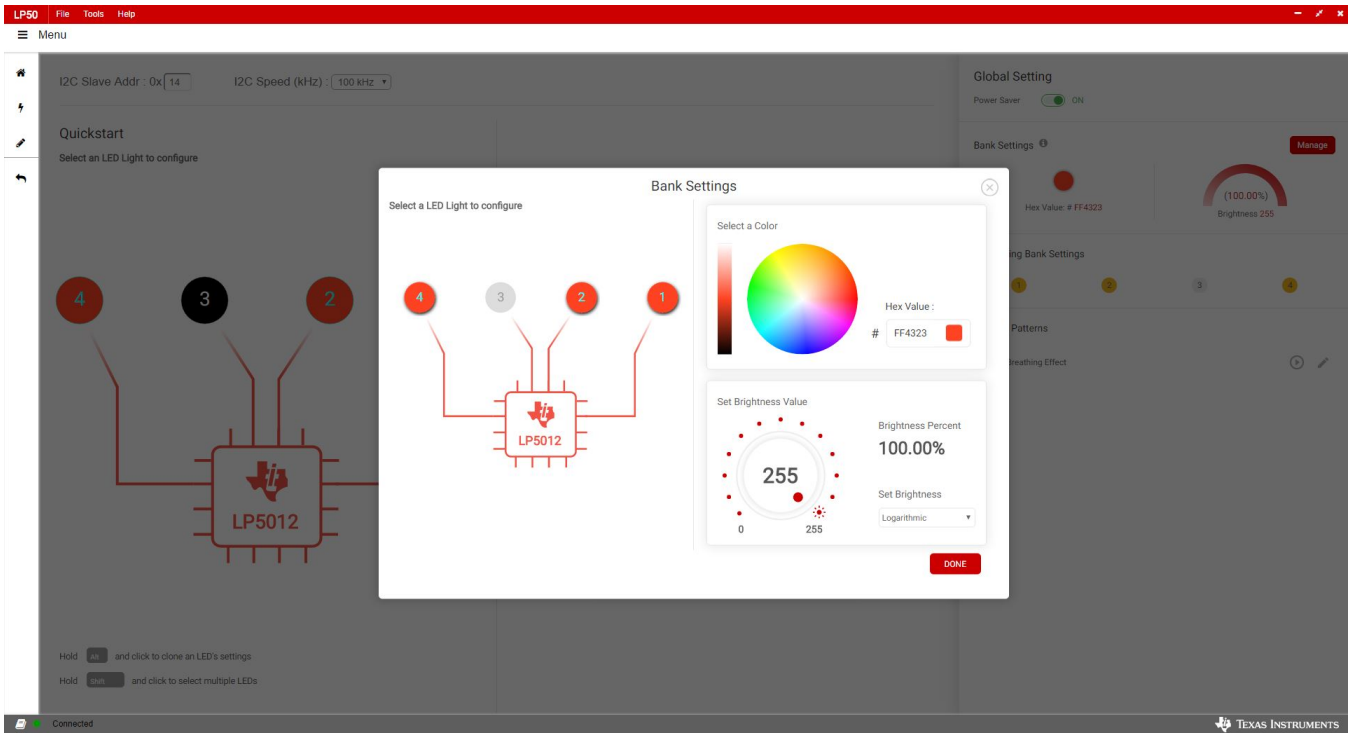

Figure 12. Bank Setting

Copyright © 2019, Texas Instruments Incorporated

3.3.3 Lighting Patterns

The GUI also can run the preset lighting patterns and customize the lighting pattens by modifying some parameters.

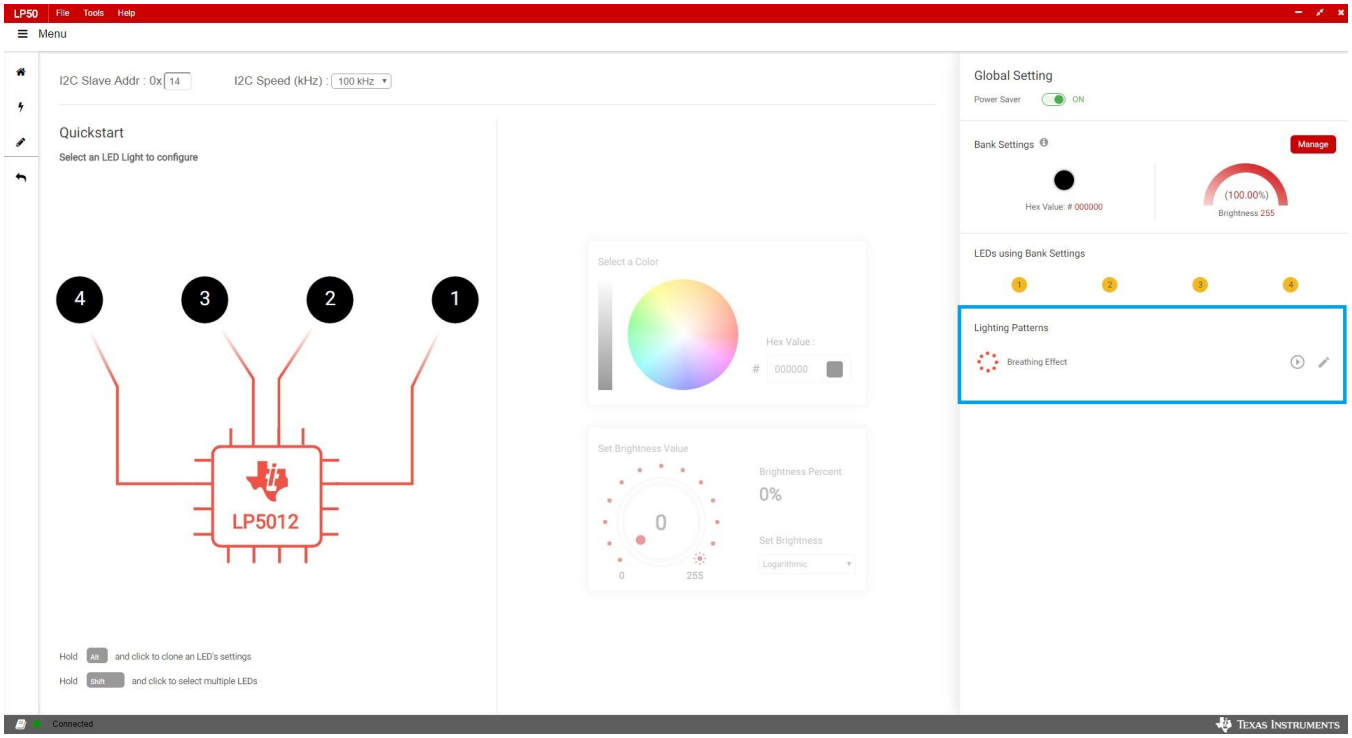

Figure 13. LED Lighting Pattern

Copyright © 2019, Texas Instruments Incorporated

3.3.4 Register Map

The register view appears when the Register icon in Figure 14 is clicked. The register view provides the register values, field values, and descriptions. The registers can be operated directly through the input check box.

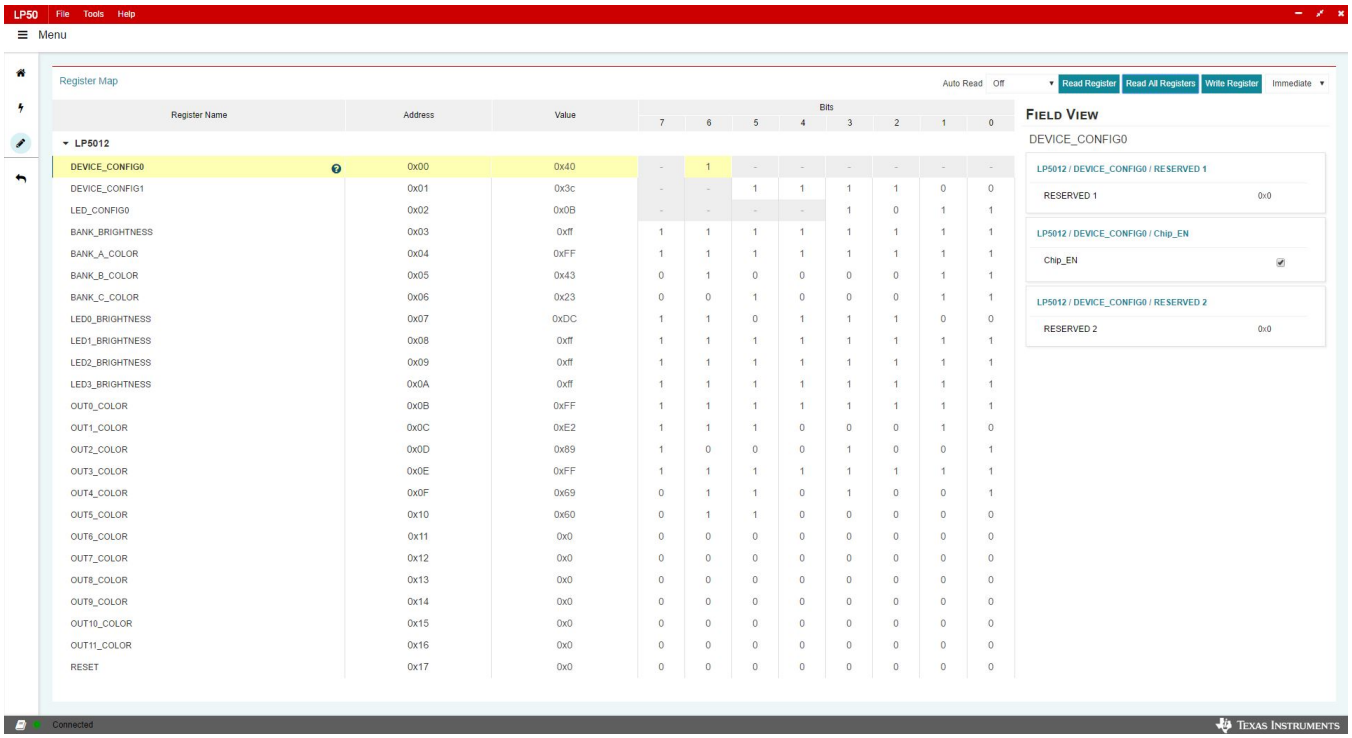

Figure 14. Register Map

Enter the desired hex value in the registers (Value column), perform a bit-wise configuration of any register fields by double-clicking on the corresponding register bit, or configure a register field by entering the desired value as hex in the Value column, binary in the Bits columns, or by using the input boxes for each field under FIELD VIEW to set values for the corresponding variables. Field View displays the description of all fields of the selected register. Each register can be read independently or all registers can be read at once by using the Read Register or Read All Registers button, respectively. The data is written to the registers in one of two ways, depending on the update mode (Immediate↓ or Deferred↓) button. Clicking the button toggles between the two modes. In Immediate mode, the register data is written immediately following a Current Value , an individual bit, or a Value change. In Deferred mode, the displayed data is written to all registers on depression of the Write Register button. Press the Read All Registers button to read back all the registers and update the values in this table. If any register value must be changed, simply double-click on the individual bit values to change the value in this table in immediate updated mode or press the Write Register button to write all the registers at a time if Deferred is selected instead of Immediate from the drop-down box. Register settings can be saved in text-file format by selecting Save Registers from the file menu. A register settings file in text-file format can be loaded and programmed automatically by selecting Load Register from the file menu.

Copyright © 2019, Texas Instruments Incorporated

3.3.5 Tool Bar

Registers can be loaded and saved through the tool bar under the File menu.

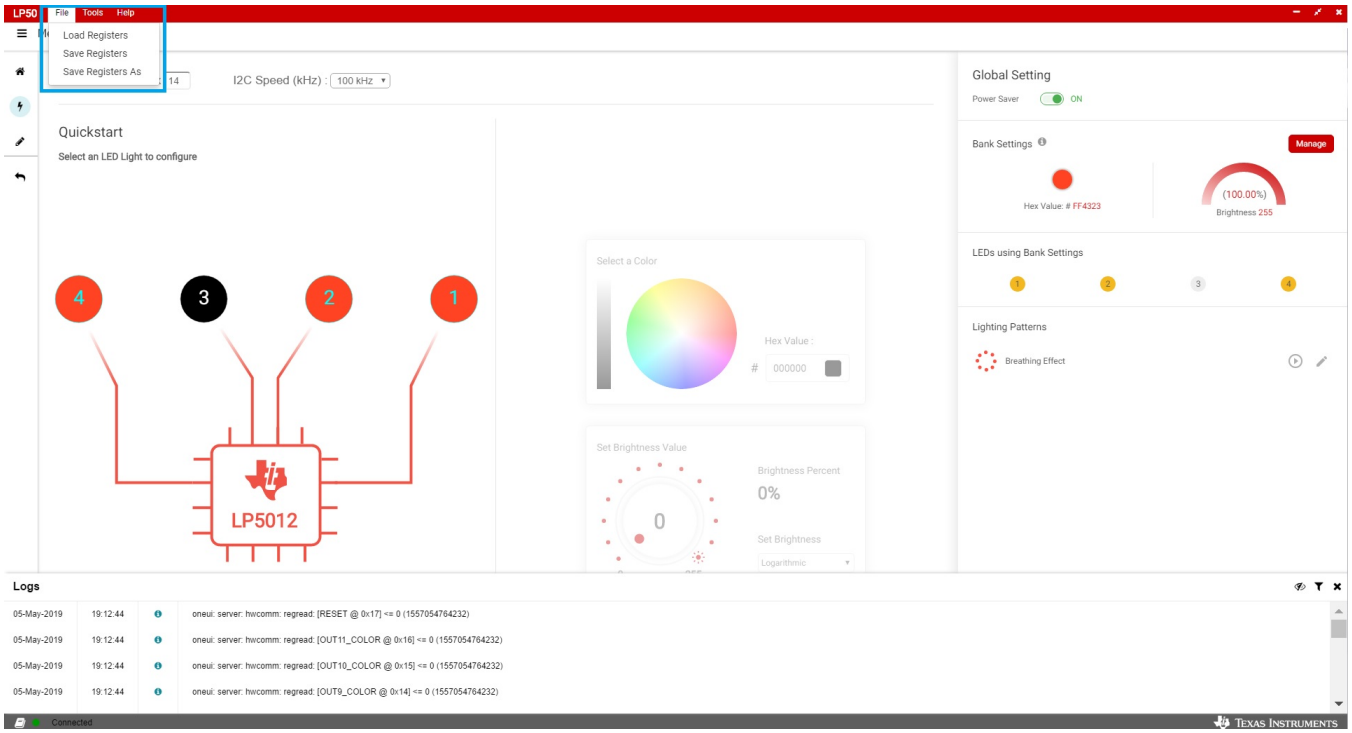

Figure 15. Tool Bar

Copyright © 2019, Texas Instruments Incorporated

4 Board Layout

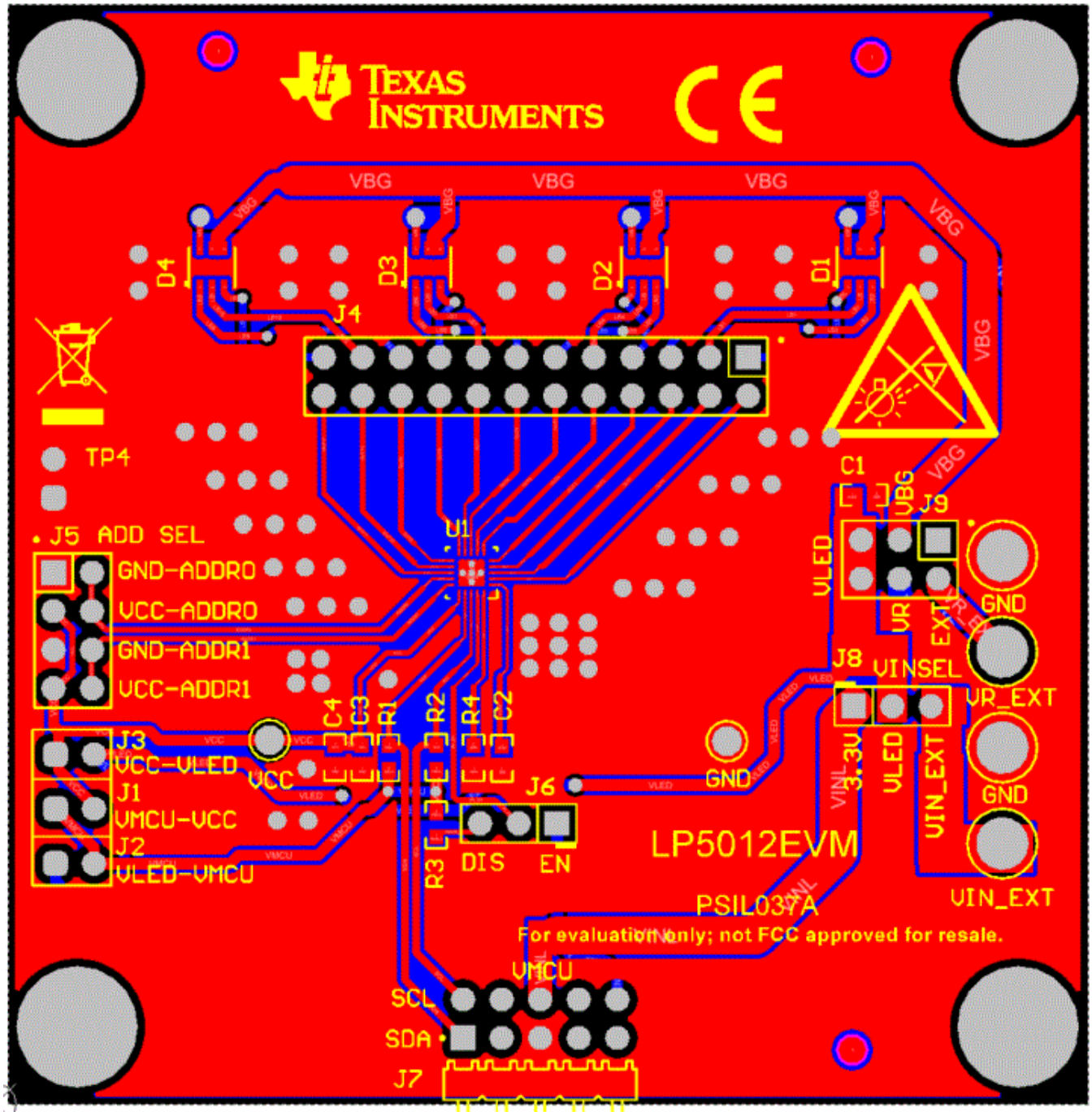

Figure 16. Top Layer Routing

Copyright © 2019, Texas Instruments Incorporated

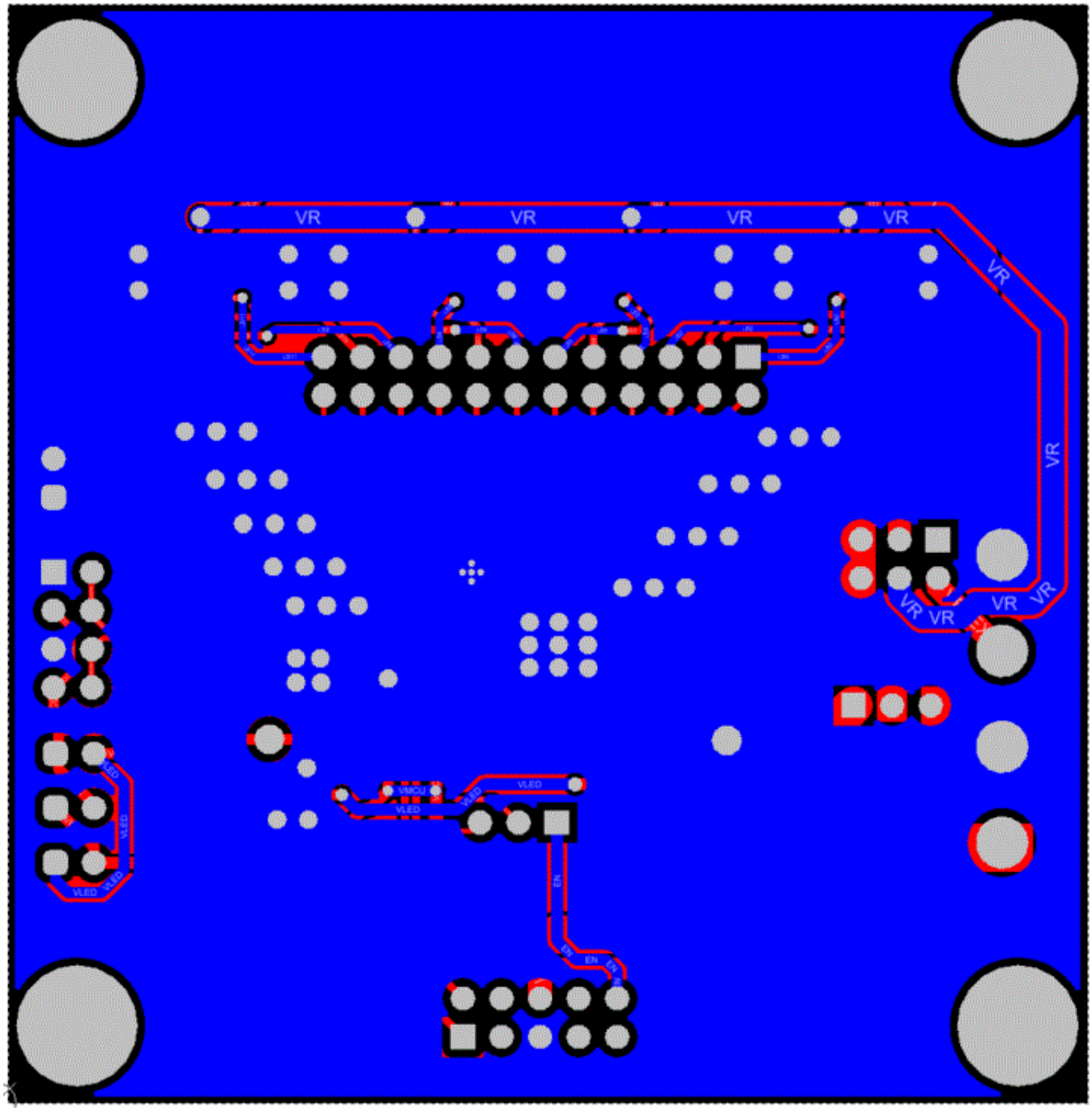

Figure 17. Bottom Layer Routing (Mirrored)

Copyright © 2019, Texas Instruments Incorporated

4.1 Schematic

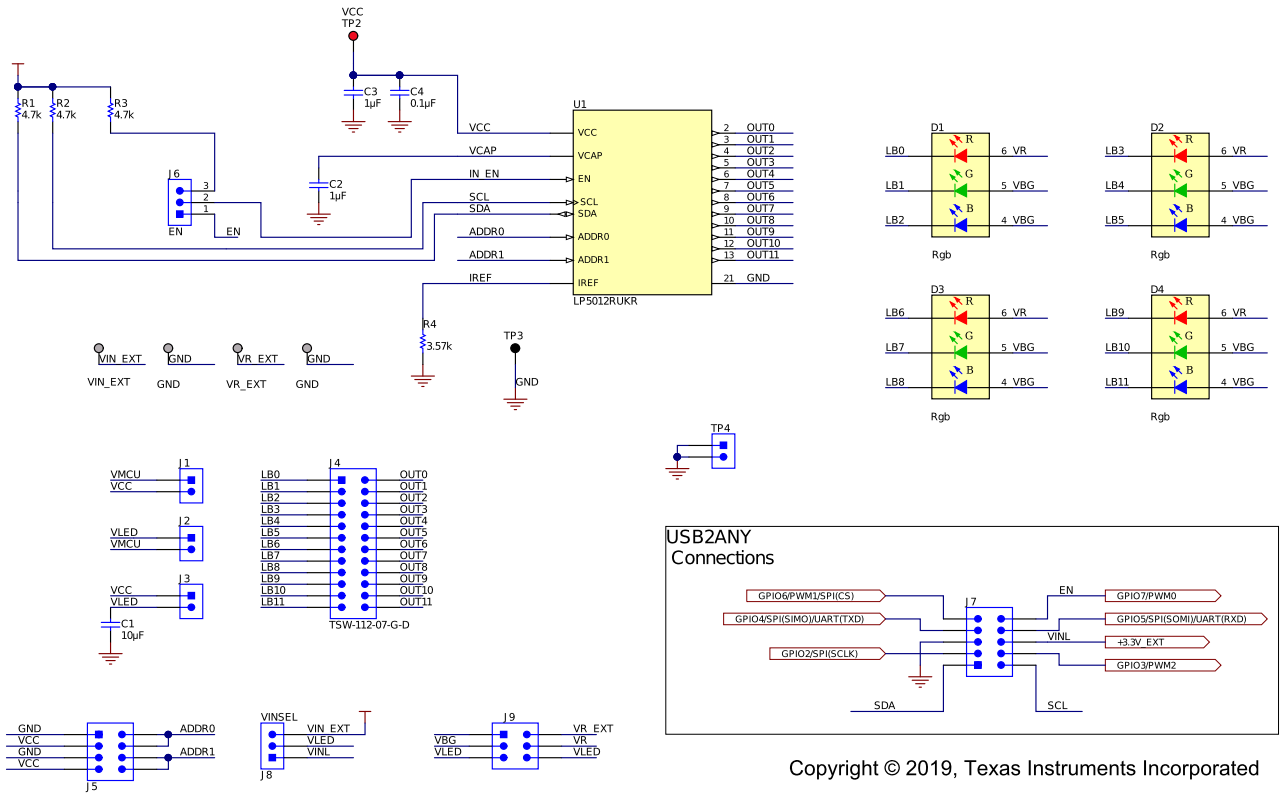

Figure 18. LP5012EVM Schematic Diagram

Copyright © 2019, Texas Instruments Incorporated

4.2 Bill of Materials

Table 2. Bill of Materials (BOM)

DESIGNATOR	QTY	VALUE	DESCRIPTION	PART NUMBER	MANUFACTURER
C1	1	10 µF	CAP, CERM, 10 µF, 6.3 V, +/- 10%, JB, 0603	C1608JB0J106K080AB	TDK
C2, C3	2	1 µF	CAP, CERM, 1 µF, 25 V,+/- 10%, X7R, 0603	06033C105KAT2A	AVX
C4	1	0.1 µF	CAP, CERM, 0.1 µF, 16 V,+/- 5%, X7R, 0603	0603YC104JAT2A	AVX
D1, D2, D3, D4	4	Rgb	LED, RGB, SMD	KRTB HFLP71.32	OSRAM
H1, H3, H5, H7	4		Standoff, Hex, 0.5"L #4-40 Nylon	1902C	Keystone
H2, H4, H6, H8	4		Machine Screw, Round, #4-40 x 1/4, Nylon, Philips panhead	NY PMS 440 0025 PH	B&F Fastener Supply
J1, J2, J3, TP4	4		Header, 100mil, 2x1, Gold, TH	TSW-102-07-G-S	Samtec
J4	1		Header, 100mil, 12x2, Gold, TH	TSW-112-07-G-D	Samtec
J5	1		Header, 100mil, 4x2, Gold, TH	TSW-104-07-G-D	Samtec
J6, J8	2		Header, 100mil, 3x1, Gold, TH	TSW-103-07-G-S	Samtec
J7	1		Header, 100mil, 5x2, Gold, R/A, TH	TSW-105-08-G-D-RA	Samtec
J9	1		Header, 100mil, 3x2, Gold, TH	TSW-103-07-G-D	Vishay-Dale
R1, R2, R3	3	4.7k	RES, 4.7 k, 5%, 0.1 W, 0603	CRCW06034K70JNEA	Yageo America
R4	1	3.57k	RES, 3.57 k, 1%, 0.1 W, 0603	RC0603FR-073K57L	Sullins Connector Solutions
SH1, SH2, SH3, SH4, SH5, SH6, SH7, SH8, SH9, SH10, SH11, SH12, SH13, SH14, SH15, SH16, SH17, SH18, SH19, SH20	20	1 × 2	Shunt, 100mil, Flash Gold, Black	SPC02SYAN	Sullins Connector Solutions
TP1, TP6, TP7, TP8	4		Terminal, Turret, TH, Double	1502-2	Keystone
TP2	1		Test Point, Miniature, Red, TH	5000	Keystone
TP3	1		Test Point, Miniature, Black, TH	5001	Keystone
U1	1		12-Channel I2C Constant Current RGB LED Driver, RUK0020B (WQFN-20)	LP5012RUKR	Texas Instruments

Copyright © 2019, Texas Instruments Incorporated

STANDARD TERMS FOR EVALUATION MODULES

1. *Delivery:* TI delivers TI evaluation boards, kits, or modules, including any accompanying demonstration software, components, and/or documentation which may be provided together or separately (collectively, an "EVM" or "EVMs") to the User ("User") in accordance with the terms set forth herein. User's acceptance of the EVM is expressly subject to the following terms.

   1.1 EVMs are intended solely for product or software developers for use in a research and development setting to facilitate feasibility evaluation, experimentation, or scientific analysis of TI semiconductors products. EVMs have no direct function and are not finished products. EVMs shall not be directly or indirectly assembled as a part or subassembly in any finished product. For clarification, any software or software tools provided with the EVM ("Software") shall not be subject to the terms and conditions set forth herein but rather shall be subject to the applicable terms that accompany such Software

   1.2 EVMs are not intended for consumer or household use. EVMs may not be sold, sublicensed, leased, rented, loaned, assigned, or otherwise distributed for commercial purposes by Users, in whole or in part, or used in any finished product or production system.

2 *Limited Warranty and Related Remedies/Disclaimers*:

   2.1 These terms do not apply to Software. The warranty, if any, for Software is covered in the applicable Software License Agreement.

   2.2 TI warrants that the TI EVM will conform to TI's published specifications for ninety (90) days after the date TI delivers such EVM to User. Notwithstanding the foregoing, TI shall not be liable for a nonconforming EVM if (a) the nonconformity was caused by neglect, misuse or mistreatment by an entity other than TI, including improper installation or testing, or for any EVMs that have been altered or modified in any way by an entity other than TI, (b) the nonconformity resulted from User's design, specifications or instructions for such EVMs or improper system design, or (c) User has not paid on time. Testing and other quality control techniques are used to the extent TI deems necessary. TI does not test all parameters of each EVM. User's claims against TI under this Section 2 are void if User fails to notify TI of any apparent defects in the EVMs within ten (10) business days after delivery, or of any hidden defects with ten (10) business days after the defect has been detected.

   2.3 TI's sole liability shall be at its option to repair or replace EVMs that fail to conform to the warranty set forth above, or credit User's account for such EVM. TI's liability under this warranty shall be limited to EVMs that are returned during the warranty period to the address designated by TI and that are determined by TI not to conform to such warranty. If TI elects to repair or replace such EVM, TI shall have a reasonable time to repair such EVM or provide replacements. Repaired EVMs shall be warranted for the remainder of the original warranty period. Replaced EVMs shall be warranted for a new full ninety (90) day warranty period.

WARNING

Evaluation Kits are intended solely for use by technically qualified, professional electronics experts who are familiar with the dangers and application risks associated with handling electrical mechanical components, systems, and subsystems.

User shall operate the Evaluation Kit within TI's recommended guidelines and any applicable legal or environmental requirements as well as reasonable and customary safeguards. Failure to set up and/or operate the Evaluation Kit within TI's recommended guidelines may result in personal injury or death or property damage. Proper set up entails following TI's instructions for electrical ratings of interface circuits such as input, output and electrical loads.

NOTE:

EXPOSURE TO ELECTROSTATIC DISCHARGE (ESD) MAY CAUSE DEGREDATION OR FAILURE OF THE EVALUATION KIT; TI RECOMMENDS STORAGE OF THE EVALUATION KIT IN A PROTECTIVE ESD BAG.

3 *Regulatory Notices:*

3.1 *United States*

3.1.1 *Notice applicable to EVMs not FCC-Approved:*

FCC NOTICE: This kit is designed to allow product developers to evaluate electronic components, circuitry, or software associated with the kit to determine whether to incorporate such items in a finished product and software developers to write software applications for use with the end product. This kit is not a finished product and when assembled may not be resold or otherwise marketed unless all required FCC equipment authorizations are first obtained. Operation is subject to the condition that this product not cause harmful interference to licensed radio stations and that this product accept harmful interference. Unless the assembled kit is designed to operate under part 15, part 18 or part 95 of this chapter, the operator of the kit must operate under the authority of an FCC license holder or must secure an experimental authorization under part 5 of this chapter.

3.1.2 *For EVMs annotated as FCC – FEDERAL COMMUNICATIONS COMMISSION Part 15 Compliant:*

CAUTION

This device complies with part 15 of the FCC Rules. Operation is subject to the following two conditions: (1) This device may not cause harmful interference, and (2) this device must accept any interference received, including interference that may cause undesired operation.

Changes or modifications not expressly approved by the party responsible for compliance could void the user's authority to operate the equipment.

FCC Interference Statement for Class A EVM devices

NOTE: This equipment has been tested and found to comply with the limits for a Class A digital device, pursuant to part 15 of the FCC Rules. These limits are designed to provide reasonable protection against harmful interference when the equipment is operated in a commercial environment. This equipment generates, uses, and can radiate radio frequency energy and, if not installed and used in accordance with the instruction manual, may cause harmful interference to radio communications. Operation of this equipment in a residential area is likely to cause harmful interference in which case the user will be required to correct the interference at his own expense.

FCC Interference Statement for Class B EVM devices

NOTE: This equipment has been tested and found to comply with the limits for a Class B digital device, pursuant to part 15 of the FCC Rules. These limits are designed to provide reasonable protection against harmful interference in a residential installation. This equipment generates, uses and can radiate radio frequency energy and, if not installed and used in accordance with the instructions, may cause harmful interference to radio communications. However, there is no guarantee that interference will not occur in a particular installation. If this equipment does cause harmful interference to radio or television reception, which can be determined by turning the equipment off and on, the user is encouraged to try to correct the interference by one or more of the following measures:

- *Reorient or relocate the receiving antenna.*
- *Increase the separation between the equipment and receiver.*
- *Connect the equipment into an outlet on a circuit different from that to which the receiver is connected.*
- *Consult the dealer or an experienced radio/TV technician for help.*

3.2 *Canada*

3.2.1 *For EVMs issued with an Industry Canada Certificate of Conformance to RSS-210 or RSS-247*

Concerning EVMs Including Radio Transmitters:

This device complies with Industry Canada license-exempt RSSs. Operation is subject to the following two conditions:

(1) this device may not cause interference, and (2) this device must accept any interference, including interference that may cause undesired operation of the device.

Concernant les EVMs avec appareils radio:

Le présent appareil est conforme aux CNR d'Industrie Canada applicables aux appareils radio exempts de licence. L'exploitation est autorisée aux deux conditions suivantes: (1) l'appareil ne doit pas produire de brouillage, et (2) l'utilisateur de l'appareil doit accepter tout brouillage radioélectrique subi, même si le brouillage est susceptible d'en compromettre le fonctionnement.

Concerning EVMs Including Detachable Antennas:

Under Industry Canada regulations, this radio transmitter may only operate using an antenna of a type and maximum (or lesser) gain approved for the transmitter by Industry Canada. To reduce potential radio interference to other users, the antenna type and its gain should be so chosen that the equivalent isotropically radiated power (e.i.r.p.) is not more than that necessary for successful communication. This radio transmitter has been approved by Industry Canada to operate with the antenna types listed in the user guide with the maximum permissible gain and required antenna impedance for each antenna type indicated. Antenna types not included in this list, having a gain greater than the maximum gain indicated for that type, are strictly prohibited for use with this device.

Concernant les EVMs avec antennes détachables

Conformément à la réglementation d'Industrie Canada, le présent émetteur radio peut fonctionner avec une antenne d'un type et d'un gain maximal (ou inférieur) approuvé pour l'émetteur par Industrie Canada. Dans le but de réduire les risques de brouillage radioélectrique à l'intention des autres utilisateurs, il faut choisir le type d'antenne et son gain de sorte que la puissance isotrope rayonnée équivalente (p.i.r.e.) ne dépasse pas l'intensité nécessaire à l'établissement d'une communication satisfaisante. Le présent émetteur radio a été approuvé par Industrie Canada pour fonctionner avec les types d'antenne énumérés dans le manuel d'usage et ayant un gain admissible maximal et l'impédance requise pour chaque type d'antenne. Les types d'antenne non inclus dans cette liste, ou dont le gain est supérieur au gain maximal indiqué, sont strictement interdits pour l'exploitation de l'émetteur

3.3 *Japan*

3.3.1 *Notice for EVMs delivered in Japan:* Please see http://www.tij.co.jp/lsds/ti_ja/general/eStore/notice_01.page 日本国内に輸入される評価用キット、ボードについては、次のところをご覧ください。
http://www.tij.co.jp/lsds/ti_ja/general/eStore/notice_01.page

3.3.2 *Notice for Users of EVMs Considered "Radio Frequency Products" in Japan:* EVMs entering Japan may not be certified by TI as conforming to Technical Regulations of Radio Law of Japan.

If User uses EVMs in Japan, not certified to Technical Regulations of Radio Law of Japan, User is required to follow the instructions set forth by Radio Law of Japan, which includes, but is not limited to, the instructions below with respect to EVMs (which for the avoidance of doubt are stated strictly for convenience and should be verified by User):

1. Use EVMs in a shielded room or any other test facility as defined in the notification #173 issued by Ministry of Internal Affairs and Communications on March 28, 2006, based on Sub-section 1.1 of Article 6 of the Ministry's Rule for Enforcement of Radio Law of Japan,
2. Use EVMs only after User obtains the license of Test Radio Station as provided in Radio Law of Japan with respect to EVMs, or
3. Use of EVMs only after User obtains the Technical Regulations Conformity Certification as provided in Radio Law of Japan with respect to EVMs. Also, do not transfer EVMs, unless User gives the same notice above to the transferee. Please note that if User does not follow the instructions above, User will be subject to penalties of Radio Law of Japan.

【無線電波を送信する製品の開発キットをお使いになる際の注意事項】 開発キットの中には技術基準適合証明を受けていないものがあります。 技術適合証明を受けていないもののご使用に際しては、電波法遵守のため、以下のいずれかの措置を取っていただく必要がありますのでご注意ください。

1. 電波法施行規則第6条第1項第1号に基づく平成18年3月28日総務省告示第173号で定められた電波暗室等の試験設備でご使用いただく。
2. 実験局の免許を取得後ご使用いただく。
3. 技術基準適合証明を取得後ご使用いただく。

なお、本製品は、上記の「ご使用にあたっての注意」を譲渡先、移転先に通知しない限り、譲渡、移転できないものとします。

上記を遵守頂けない場合は、電波法の罰則が適用される可能性があることをご留意ください。 日本テキサス· インスツルメンツ株式会社

東京都新宿区西新宿６丁目２４番１号

西新宿三井ビル

3.3.3 *Notice for EVMs for Power Line Communication:* Please see http://www.tij.co.jp/lsds/ti_ja/general/eStore/notice_02.page
電力線搬送波通信についての開発キットをお使いになる際の注意事項については、次のところをご覧ください。http://www.tij.co.jp/lsds/ti_ja/general/eStore/notice_02.page

3.4 *European Union*

3.4.1 *For EVMs subject to EU Directive 2014/30/EU (Electromagnetic Compatibility Directive)*:

This is a class A product intended for use in environments other than domestic environments that are connected to a low-voltage power-supply network that supplies buildings used for domestic purposes. In a domestic environment this product may cause radio interference in which case the user may be required to take adequate measures.

4 *EVM Use Restrictions and Warnings:*

4.1 EVMS ARE NOT FOR USE IN FUNCTIONAL SAFETY AND/OR SAFETY CRITICAL EVALUATIONS, INCLUDING BUT NOT LIMITED TO EVALUATIONS OF LIFE SUPPORT APPLICATIONS.

4.2 User must read and apply the user guide and other available documentation provided by TI regarding the EVM prior to handling or using the EVM, including without limitation any warning or restriction notices. The notices contain important safety information related to, for example, temperatures and voltages.

4.3 *Safety-Related Warnings and Restrictions:*

4.3.1 User shall operate the EVM within TI's recommended specifications and environmental considerations stated in the user guide, other available documentation provided by TI, and any other applicable requirements and employ reasonable and customary safeguards. Exceeding the specified performance ratings and specifications (including but not limited to input and output voltage, current, power, and environmental ranges) for the EVM may cause personal injury or death, or property damage. If there are questions concerning performance ratings and specifications, User should contact a TI field representative prior to connecting interface electronics including input power and intended loads. Any loads applied outside of the specified output range may also result in unintended and/or inaccurate operation and/or possible permanent damage to the EVM and/or interface electronics. Please consult the EVM user guide prior to connecting any load to the EVM output. If there is uncertainty as to the load specification, please contact a TI field representative. During normal operation, even with the inputs and outputs kept within the specified allowable ranges, some circuit components may have elevated case temperatures. These components include but are not limited to linear regulators, switching transistors, pass transistors, current sense resistors, and heat sinks, which can be identified using the information in the associated documentation. When working with the EVM, please be aware that the EVM may become very warm.

4.3.2 EVMs are intended solely for use by technically qualified, professional electronics experts who are familiar with the dangers and application risks associated with handling electrical mechanical components, systems, and subsystems. User assumes all responsibility and liability for proper and safe handling and use of the EVM by User or its employees, affiliates, contractors or designees. User assumes all responsibility and liability to ensure that any interfaces (electronic and/or mechanical) between the EVM and any human body are designed with suitable isolation and means to safely limit accessible leakage currents to minimize the risk of electrical shock hazard. User assumes all responsibility and liability for any improper or unsafe handling or use of the EVM by User or its employees, affiliates, contractors or designees.

4.4 User assumes all responsibility and liability to determine whether the EVM is subject to any applicable international, federal, state, or local laws and regulations related to User's handling and use of the EVM and, if applicable, User assumes all responsibility and liability for compliance in all respects with such laws and regulations. User assumes all responsibility and liability for proper disposal and recycling of the EVM consistent with all applicable international, federal, state, and local requirements.

5. *Accuracy of Information:* To the extent TI provides information on the availability and function of EVMs, TI attempts to be as accurate as possible. However, TI does not warrant the accuracy of EVM descriptions, EVM availability or other information on its websites as accurate, complete, reliable, current, or error-free.

6. *Disclaimers:*

6.1 EXCEPT AS SET FORTH ABOVE, EVMS AND ANY MATERIALS PROVIDED WITH THE EVM (INCLUDING, BUT NOT LIMITED TO, REFERENCE DESIGNS AND THE DESIGN OF THE EVM ITSELF) ARE PROVIDED "AS IS" AND "WITH ALL FAULTS." TI DISCLAIMS ALL OTHER WARRANTIES, EXPRESS OR IMPLIED, REGARDING SUCH ITEMS, INCLUDING BUT NOT LIMITED TO ANY EPIDEMIC FAILURE WARRANTY OR IMPLIED WARRANTIES OF MERCHANTABILITY OR FITNESS FOR A PARTICULAR PURPOSE OR NON-INFRINGEMENT OF ANY THIRD PARTY PATENTS, COPYRIGHTS, TRADE SECRETS OR OTHER INTELLECTUAL PROPERTY RIGHTS.

6.2 EXCEPT FOR THE LIMITED RIGHT TO USE THE EVM SET FORTH HEREIN, NOTHING IN THESE TERMS SHALL BE CONSTRUED AS GRANTING OR CONFERRING ANY RIGHTS BY LICENSE, PATENT, OR ANY OTHER INDUSTRIAL OR INTELLECTUAL PROPERTY RIGHT OF TI, ITS SUPPLIERS/LICENSORS OR ANY OTHER THIRD PARTY, TO USE THE EVM IN ANY FINISHED END-USER OR READY-TO-USE FINAL PRODUCT, OR FOR ANY INVENTION, DISCOVERY OR IMPROVEMENT, REGARDLESS OF WHEN MADE, CONCEIVED OR ACQUIRED.

7. *USER'S INDEMNITY OBLIGATIONS AND REPRESENTATIONS.* USER WILL DEFEND, INDEMNIFY AND HOLD TI, ITS LICENSORS AND THEIR REPRESENTATIVES HARMLESS FROM AND AGAINST ANY AND ALL CLAIMS, DAMAGES, LOSSES, EXPENSES, COSTS AND LIABILITIES (COLLECTIVELY, "CLAIMS") ARISING OUT OF OR IN CONNECTION WITH ANY HANDLING OR USE OF THE EVM THAT IS NOT IN ACCORDANCE WITH THESE TERMS. THIS OBLIGATION SHALL APPLY WHETHER CLAIMS ARISE UNDER STATUTE, REGULATION, OR THE LAW OF TORT, CONTRACT OR ANY OTHER LEGAL THEORY, AND EVEN IF THE EVM FAILS TO PERFORM AS DESCRIBED OR EXPECTED.

8. *Limitations on Damages and Liability:*

   8.1 *General Limitations*. IN NO EVENT SHALL TI BE LIABLE FOR ANY SPECIAL, COLLATERAL, INDIRECT, PUNITIVE, INCIDENTAL, CONSEQUENTIAL, OR EXEMPLARY DAMAGES IN CONNECTION WITH OR ARISING OUT OF THESE TERMS OR THE USE OF THE EVMS , REGARDLESS OF WHETHER TI HAS BEEN ADVISED OF THE POSSIBILITY OF SUCH DAMAGES. EXCLUDED DAMAGES INCLUDE, BUT ARE NOT LIMITED TO, COST OF REMOVAL OR REINSTALLATION, ANCILLARY COSTS TO THE PROCUREMENT OF SUBSTITUTE GOODS OR SERVICES, RETESTING, OUTSIDE COMPUTER TIME, LABOR COSTS, LOSS OF GOODWILL, LOSS OF PROFITS, LOSS OF SAVINGS, LOSS OF USE, LOSS OF DATA, OR BUSINESS INTERRUPTION. NO CLAIM, SUIT OR ACTION SHALL BE BROUGHT AGAINST TI MORE THAN TWELVE (12) MONTHS AFTER THE EVENT THAT GAVE RISE TO THE CAUSE OF ACTION HAS OCCURRED.

   8.2 *Specific Limitations.* IN NO EVENT SHALL TI'S AGGREGATE LIABILITY FROM ANY USE OF AN EVM PROVIDED HEREUNDER, INCLUDING FROM ANY WARRANTY, INDEMITY OR OTHER OBLIGATION ARISING OUT OF OR IN CONNECTION WITH THESE TERMS, , EXCEED THE TOTAL AMOUNT PAID TO TI BY USER FOR THE PARTICULAR EVM(S) AT ISSUE DURING THE PRIOR TWELVE (12) MONTHS WITH RESPECT TO WHICH LOSSES OR DAMAGES ARE CLAIMED. THE EXISTENCE OF MORE THAN ONE CLAIM SHALL NOT ENLARGE OR EXTEND THIS LIMIT.

9. *Return Policy.* Except as otherwise provided, TI does not offer any refunds, returns, or exchanges. Furthermore, no return of EVM(s) will be accepted if the package has been opened and no return of the EVM(s) will be accepted if they are damaged or otherwise not in a resalable condition. If User feels it has been incorrectly charged for the EVM(s) it ordered or that delivery violates the applicable order, User should contact TI. All refunds will be made in full within thirty (30) working days from the return of the components(s), excluding any postage or packaging costs.

10. *Governing Law:* These terms and conditions shall be governed by and interpreted in accordance with the laws of the State of Texas, without reference to conflict-of-laws principles. User agrees that non-exclusive jurisdiction for any dispute arising out of or relating to these terms and conditions lies within courts located in the State of Texas and consents to venue in Dallas County, Texas. Notwithstanding the foregoing, any judgment may be enforced in any United States or foreign court, and TI may seek injunctive relief in any United States or foreign court.

Mailing Address: Texas Instruments, Post Office Box 655303, Dallas, Texas 75265
Copyright © 2019, Texas Instruments Incorporated

IMPORTANT NOTICE AND DISCLAIMER

TI PROVIDES TECHNICAL AND RELIABILITY DATA (INCLUDING DATASHEETS), DESIGN RESOURCES (INCLUDING REFERENCE DESIGNS), APPLICATION OR OTHER DESIGN ADVICE, WEB TOOLS, SAFETY INFORMATION, AND OTHER RESOURCES “AS IS” AND WITH ALL FAULTS, AND DISCLAIMS ALL WARRANTIES, EXPRESS AND IMPLIED, INCLUDING WITHOUT LIMITATION ANY IMPLIED WARRANTIES OF MERCHANTABILITY, FITNESS FOR A PARTICULAR PURPOSE OR NON-INFRINGEMENT OF THIRD PARTY INTELLECTUAL PROPERTY RIGHTS.

These resources are intended for skilled developers designing with TI products. You are solely responsible for (1) selecting the appropriate TI products for your application, (2) designing, validating and testing your application, and (3) ensuring your application meets applicable standards, and any other safety, security, or other requirements. These resources are subject to change without notice. TI grants you permission to use these resources only for development of an application that uses the TI products described in the resource. Other reproduction and display of these resources is prohibited. No license is granted to any other TI intellectual property right or to any third party intellectual property right. TI disclaims responsibility for, and you will fully indemnify TI and its representatives against, any claims, damages, costs, losses, and liabilities arising out of your use of these resources.

TI’s products are provided subject to TI’s Terms of Sale (www.ti.com/legal/termsofsale.html) or other applicable terms available either on ti.com or provided in conjunction with such TI products. TI’s provision of these resources does not expand or otherwise alter TI’s applicable warranties or warranty disclaimers for TI products.

Mailing Address: Texas Instruments, Post Office Box 655303, Dallas, Texas 75265
Copyright © 2019, Texas Instruments Incorporated