LP3962/LP3965 1.5A Fast Ultra Low Dropout Linear Regulators

Check for Samples: LP3962, LP3965

FEATURES

- **Ultra Low Dropout Voltage**
- **Low Ground Pin Current**
- **Load Regulation of 0.04%**
- **15µA Quiescent Current in Shutdown Mode**
- **Specified Output Current of 1.5A DC**
- **Available in SOT-223,SFM/TO-263 and TO-220 Packages**
- **Output Voltage Accuracy ± 1.5%**
- **$\overline{\text{Error}}$ Flag Indicates Output Status (LP3962)**
- **Sense Option Improves Better Load Regulation (LP3965)**
- **Extremely Low Output Capacitor Requirements**
- **Overtemperature/Overcurrent Protection**
- **−40°C to +125°C Junction Temperature Range**

APPLICATIONS

- **Microprocessor Power Supplies**
- **GTL, GTL+, BTL, and SSTL Bus Terminators**
- **Power Supplies for DSPs**
- **SCSI Terminator**
- **Post Regulators**
- **High Efficiency Linear Regulators**
- **Battery Chargers**
- **Other Battery Powered Applications**

DESCRIPTION

The LP3962/LP3965 series of fast ultra low-dropout linear regulators operate from a +2.5V to +7.0V input supply. Wide range of preset output voltage options are available. These ultra low dropout linear regulators respond very fast to step changes in load which makes them suitable for low voltage microprocessor applications. The LP3962/LP3965 are developed on a CMOS process which allows low quiescent current operation independent of output load current. This CMOS process also allows the LP3962/LP3965 to operate under extremely low dropout conditions.

Dropout Voltage: Ultra low dropout voltage; typically 38mV at 150mA load current and 380mV at 1.5A load current.

Ground Pin Current: Typically 5mA at 1.5A load current.

Shutdown Mode: Typically 15µA quiescent current when the shutdown pin is pulled low.

$\overline{\text{Error}}$ Flag: $\overline{\text{Error}}$ flag goes low when the output voltage drops 10% below nominal value (for LP3962).

SENSE: Sense pin improves regulation at remote loads. (For LP3965)

Precision Output Voltage: Multiple output voltage options are available ranging from 1.2V to 5.0V and adjustable (LP3965), with a specified accuracy of ±1.5% at room temperature, and ±3.0% over all conditions (varying line, load, and temperature).

Typical Application Circuits

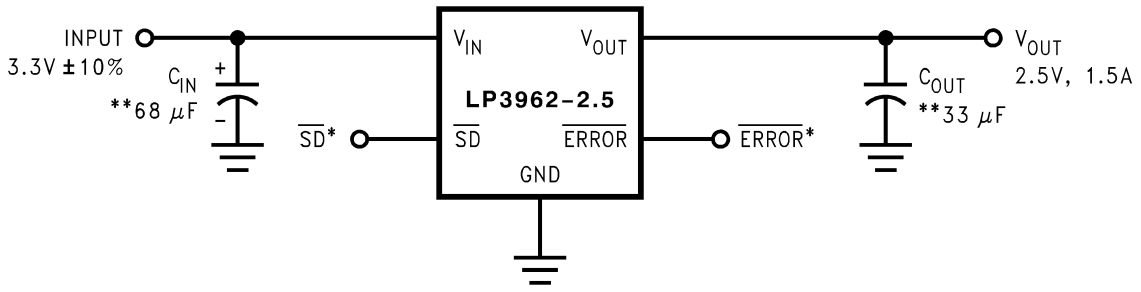

*$\overline{\text{SD}}$ and $\overline{\text{ERROR}}$ pins must be pulled high through a 10kΩ pull-up resistor. Connect the $\overline{\text{ERROR}}$ pin to ground if this function is not used. See Application Hints section for more information.

Please be aware that an important notice concerning availability, standard warranty, and use in critical applications of Texas Instruments semiconductor products and disclaimers thereto appears at the end of this data sheet.

All trademarks are the property of their respective owners.

PRODUCTION DATA information is current as of publication date. Products conform to specifications per the terms of the Texas Instruments standard warranty. Production processing does not necessarily include testing of all parameters.

Copyright © 2000–2013, Texas Instruments Incorporated

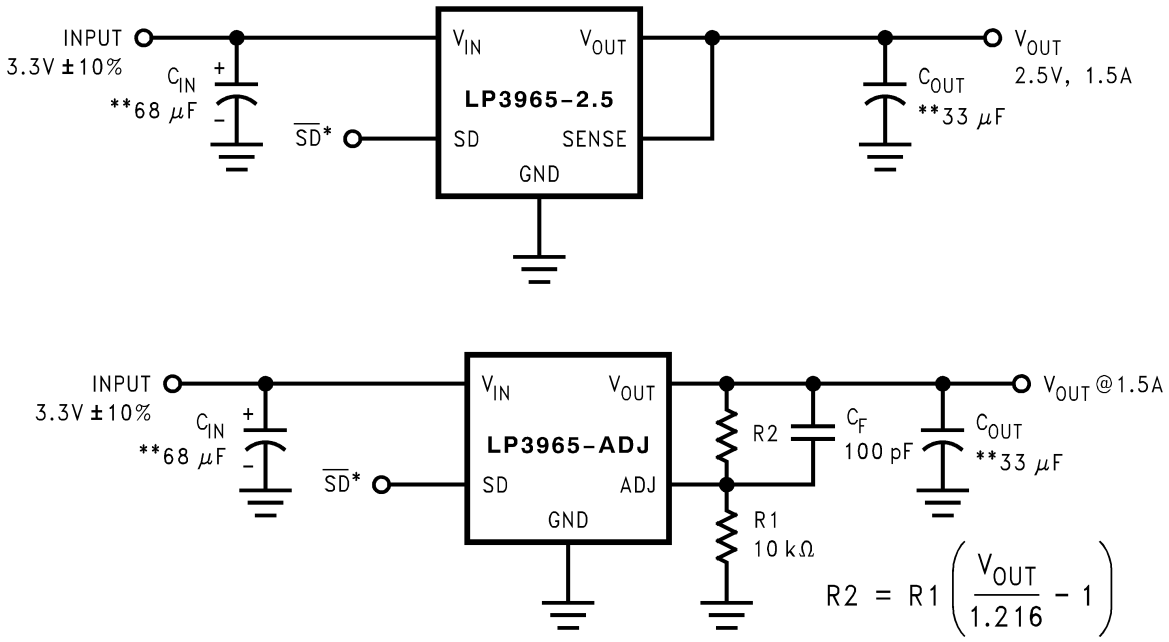

*$\overline{SD}$ and $\overline{ERROR}$ pins must be pulled high through a 10kΩ pull-up resistor. Connect the $\overline{ERROR}$ pin to ground if this function is not used. See Application Hints section for more information.

Block Diagram LP3962

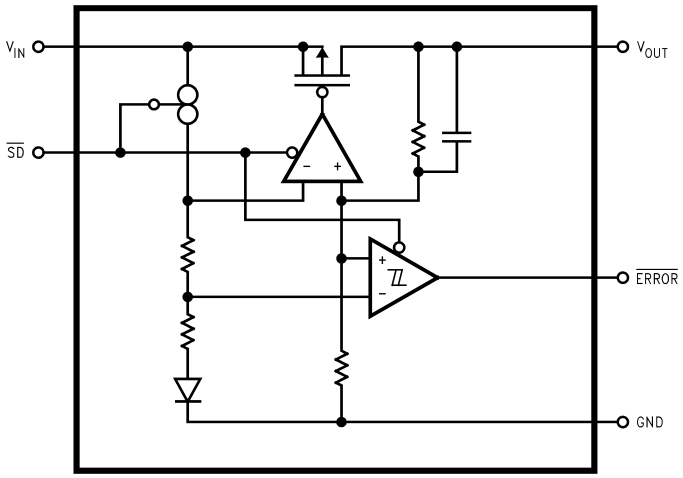

Copyright © 2000–2013, Texas Instruments Incorporated

Block Diagram LP3965

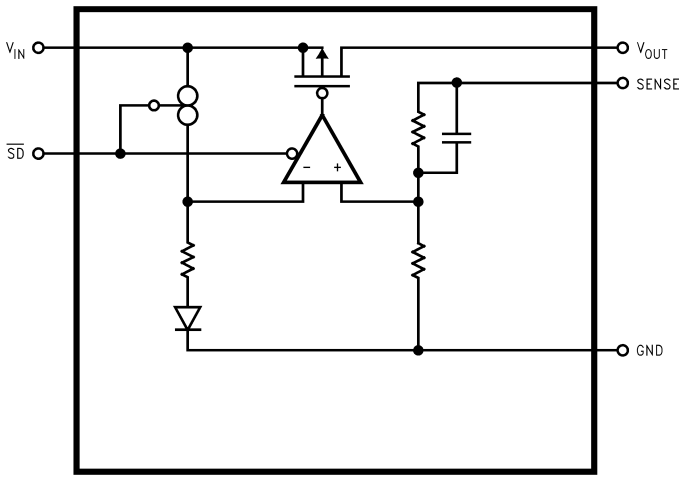

Block Diagram LP3965-ADJ

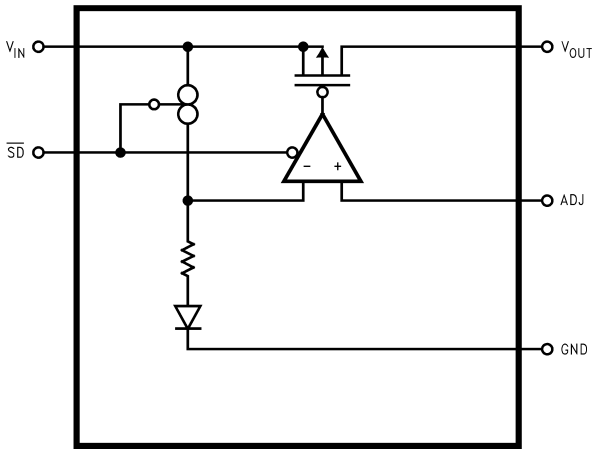

Connection Diagram

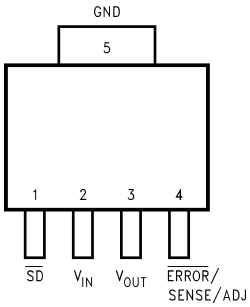

Figure 1. Top View
SOT-223-5 Package

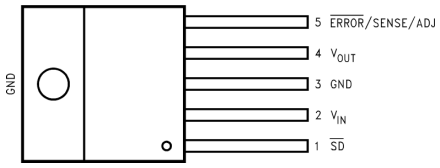

Figure 2. Top View
TO-220-5 Package
Bent, Staggered Leads

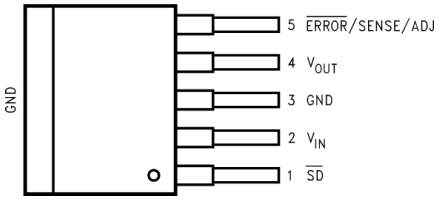

Figure 3. Top View
SFM/TO-263-5 Package

Pin Descriptions for SOT-223-5 Package

Pin #	LP3962		LP3965	
	Name	Function	Name	Function
1	$\overline{SD}$	Shutdown	$\overline{SD}$	Shutdown
2	V_{IN}	Input Supply	V_{IN}	Input Supply
3	V_{OUT}	Output Voltage	V_{OUT}	Output Voltage
4	$\overline{ERROR}$	$\overline{ERROR}$ Flag	SENSE/ADJ	Remote Sense Pin or Output Adjust Pin
5	GND	Ground	GND	Ground

Pin Descriptions for TO-220-5 and SFM/TO-263-5 Packages

Pin #	LP3962		LP3965	
	Name	Function	Name	Function
1	$\overline{SD}$	Shutdown	$\overline{SD}$	Shutdown
2	V_{IN}	Input Supply	V_{IN}	Input Supply
3	GND	Ground	GND	Ground
4	V_{OUT}	Output Voltage	V_{OUT}	Output Voltage
5	$\overline{ERROR}$	$\overline{ERROR}$ Flag	SENSE/ADJ	Remote Sense Pin or Output Adjust Pin

These devices have limited built-in ESD protection. The leads should be shorted together or the device placed in conductive foam during storage or handling to prevent electrostatic damage to the MOS gates.

Absolute Maximum Ratings (1)(2)

Storage Temperature Range	−65°C to +150°C
Lead Temperature (Soldering, 5 sec.)	260°C
ESD Rating (3)	2 kV
Power Dissipation (4)	Internally Limited
Input Supply Voltage (Survival)	−0.3V to +7.5V
Shutdown Input Voltage (Survival)	−0.3V to V_{IN}+0.3V
Output Voltage (Survival), (5), (6)	−0.3V to +7.5V
I_{OUT} (Survival)	Short Circuit Protected
Maximum Voltage for $\overline{ERROR}$ Pin	V_{IN}+0.3V
Maximum Voltage for SENSE Pin	V_{OUT}+0.3V

(1) Absolute maximum ratings indicate limits beyond which damage to the device may occur. Operating ratings indicate conditions for which the device is intended to be functional, but does not ensure specific performance limits. For ensured specifications and test conditions, see Electrical Characteristics. The ensured specifications apply only for the test conditions listed. Some performance characteristics may degrade when the device is not operated under the listed test conditions.
(2) If Military/Aerospace specified devices are required, please contact the TI Sales Office/ Distributors for availability and specifications.
(3) The human body model is a 100pF capacitor discharged through a 1.5kΩ resistor into each pin.
(4) At elevated temperatures, devices must be derated based on package thermal resistance. The devices in TO-220 package must be derated at θ_{jA} = 50°C/W (with 0.5in^2, 1oz. copper area), junction-to-ambient (with no heat sink). The devices in the SFM/TO-263 surface-mount package must be derated at θ_{jA} = 60°C/W (with 0.5in^2, 1oz. copper area), junction-to-ambient. The devices in SOT-223 package must be derated at θ_{jA} = 90°C/W (with 0.5in^2, 1oz. copper area), junction-to-ambient.
(5) If used in a dual-supply system where the regulator load is returned to a negative supply, the LP396X output must be diode-clamped to ground.
(6) The output PMOS structure contains a diode between the V_{IN} and V_{OUT} terminals. This diode is normally reverse biased. This diode will get forward biased if the voltage at the output terminal is forced to be higher than the voltage at the input terminal. This diode can typically withstand 200mA of DC current and 1Amp of peak current.

Copyright © 2000–2013, Texas Instruments Incorporated

Operating Ratings

Input Supply Voltage (Operating), (1)	2.5V to 7.0V
Shutdown Input Voltage (Operating)	−0.3V to V_{IN}+0.3V
Maximum Operating Current (DC)	1.5A
Operating Junction Temp. Range	−40°C to +125°C

(1) The minimum operating value for V_{IN} is equal to either [$V_{OUT(NOM)}$ + $V_{DROPOUT}$] or 2.5V, whichever is greater.

Electrical Characteristics LP3962/LP3965

Limits in standard typeface are for T_J = 25°C, and limits in **boldface type** apply over the **full operating temperature range**. Unless otherwise specified: V_{IN} = $V_{O(NOM)}$ + 1V, I_L = 10 mA, C_{OUT} = 33µF, V_{SD} = V_{IN}-0.3V.

Symbol	Parameter	Conditions	Typ (1)	LP3962/5 (2)		Units
				Min	Max	
V_O	Output Voltage Tolerance (3)	10 mA ≤ I_L ≤ 1.5A V_{OUT} +1 ≤ V_{IN}≤ 7.0V	0	-1.5 **-3.0**	+1.5 **+3.0**	%
V_{ADJ}	Adjust Pin Voltage (ADJ version)	10 mA ≤ I_L ≤ 1.5A V_{OUT} +1.5V ≤ V_{IN}≤ 7.0V	1.216	1.198 **1.180**	1.234 **1.253**	V
ΔV_{OL}	Output Voltage Line Regulation (3)	V_{OUT}+1V<V_{IN}<7.0V,	0.02 **0.06**			%
$\Delta V_O / \Delta I_{OUT}$	Output Voltage Load Regulation (3)	10 mA < I_L < 1.5 A	0.04 **0.09**			%
V_{IN} - V_{OUT}	Dropout Voltage (4)	I_L = 150 mA	38		45 **55**	mV
		I_L = 1.5 A	380		450 **550**	
I_{GND}	Ground Pin Current In Normal Operation Mode	I_L = 150 mA	4		9 **10**	mA
		I_L = 1.5 A	5		14 **15**	
I_{GND}	Ground Pin Current In Shutdown Mode (5)	V_{SD} ≤ 0.2V	15		25 **75**	µA
$I_{O(PK)}$	Peak Output Current	See (6)	2.5	2.0 **1.7**		A
SHORT CIRCUIT PROTECTION						
I_{SC}	Short Circuit Current		4.5			A
OVER TEMPERATURE PROTECTION						
Tsh(t)	Shutdown Threshold		165			°C
Tsh(h)	Thermal Shutdown Hysteresis		10			°C
SHUTDOWN INPUT						
V_{SDT}	Shutdown Threshold	Output = High	V_{IN}	**V_{IN}−0.3**		V
		Output = Low	0		**0.2**	
T_{dOFF}	Turn-off delay	I_L = 1.5 A	20			µs

(1) Typical numbers are at 25°C and represent the most likely parametric norm.
(2) Limits are 100% production tested at 25°C. Limits over the operating temperature range are specified through correlation using Statistical Quality Control (SQC) methods. The limits are used to calculate TI's Average Outgoing Quality Level (AOQL).
(3) Output voltage line regulation is defined as the change in output voltage from the nominal value due to change in the input line voltage. Output voltage load regulation is defined as the change in output voltage from the nominal value due to change in load current. The line and load regulation specification contains only the typical number. However, the limits for line and load regulation are included in the output voltage tolerance specification.
(4) Dropout voltage is defined as the minimum input to output differential voltage at which the output drops 2% below the nominal value. Dropout voltage specification applies only to output voltages of 2.5V and above. For output voltages below 2.5V, the drop-out voltage is nothing but the input to output differential, since the minimum input voltage is 2.5V.
(5) This specification has been tested for −40°C ≤ T_J ≤ 85°C since the temperature rise of the device is negligible under shutdown conditions.
(6) At elevated temperatures, devices must be derated based on package thermal resistance. The devices in TO-220 package must be derated at θ_{jA} = 50°C/W (with 0.5in^2, 1oz. copper area), junction-to-ambient (with no heat sink). The devices in the SFM/TO-263 surface-mount package must be derated at θ_{jA} = 60°C/W (with 0.5in^2, 1oz. copper area), junction-to-ambient. The devices in SOT-223 package must be derated at θ_{jA} = 90°C/W (with 0.5in^2, 1oz. copper area), junction-to-ambient.

Copyright © 2000–2013, Texas Instruments Incorporated

Electrical Characteristics
LP3962/LP3965 (continued)

Limits in standard typeface are for T_J = 25°C, and limits in **boldface type** apply over the **full operating temperature range**. Unless otherwise specified: $V_{IN} = V_{O(NOM)}$ + 1V, I_L = 10 mA, C_{OUT} = 33µF, $V_{SD} = V_{IN}$-0.3V.

Symbol	Parameter	Conditions	Typ (1)	LP3962/5 (2)		Units
				Min	Max	
T_{dON}	Turn-on delay	I_L = 1.5 A	25			µs
I_{SD}	$\overline{SD}$ Input Current	$V_{SD} = V_{IN}$	1			nA
ERROR FLAG COMPARATOR						
V_T	Threshold	See (7)	10	**5**	**16**	%
V_{TH}	Threshold Hysteresis	See (7)	5	**2**	**8**	%
$V_{EF(Sat)}$	$\overline{Error}$ Flag Saturation	I_{sink} = 100µA	0.02		**0.1**	V
Td	Flag Reset Delay		1			µs
I_{lk}	$\overline{Error}$ Flag Pin Leakage Current		1			nA
I_{max}	$\overline{Error}$ Flag Pin Sink Current	V_{Error} = **0.5V** (over temp.)	1			mA
AC PARAMETERS						
PSRR	Ripple Rejection	$V_{IN} = V_{OUT}$ + 1.5V C_{OUT} = 100uF V_{OUT} = 3.3V	60			dB
		$V_{IN} = V_{OUT}$ + 0.3V C_{OUT} = 100uF V_{OUT} = 3.3V	40			
$\rho_{n(l/f}$	Output Noise Density	f = 120Hz	0.8			µV
e_n	Output Noise Voltage (rms)	BW = 10Hz – 100kHz	150			µV (rms)
		BW = 300Hz – 300kHz	100			

(7) $\overline{Error}$ Flag threshold and hysteresis are specified as percentage of regulated output voltage.

Copyright © 2000–2013, Texas Instruments Incorporated

Typical Performance Characteristics

Unless otherwise specified, V_{IN} =$V_{O(NOM)}$ + 1V, V_{OUT}= 2.5V, C_{OUT} = 33µF, I_{OUT} = 10mA, C_{IN} = 68µF, V_{SD} = V_{IN}, and T_A = 25°C.

Drop-Out Voltage vs Temperature for Different Load Currents

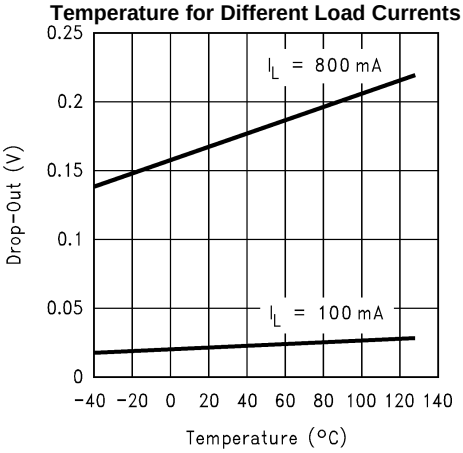

Figure 4.

Drop-Out Voltage vs Temperature for Different Output Voltages (I_{OUT} = 800mA

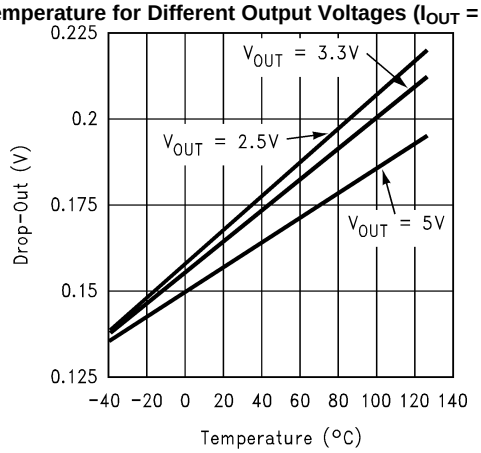

Figure 5.

Ground Pin Current vs Input Voltage (V_{SD}=V_{IN})

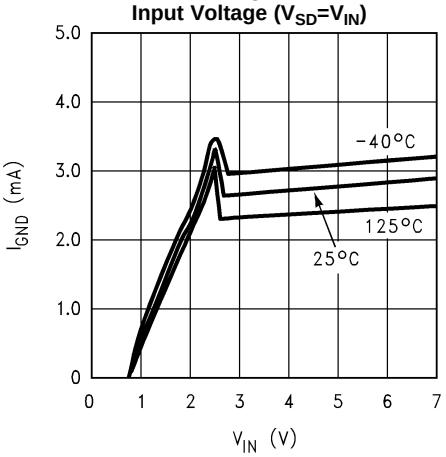

Figure 6.

Ground Pin Current vs Input Voltage (V_{SD}=100mV)

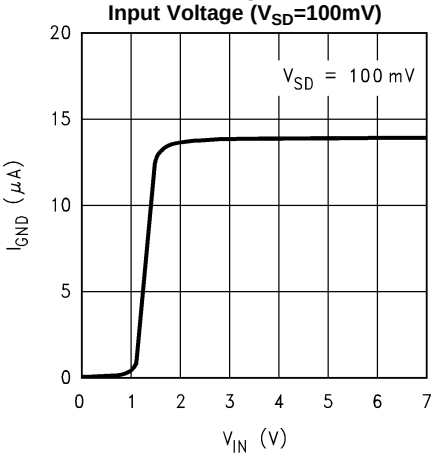

Figure 7.

Ground Current vs Temperature (V_{SD}=V_{IN})

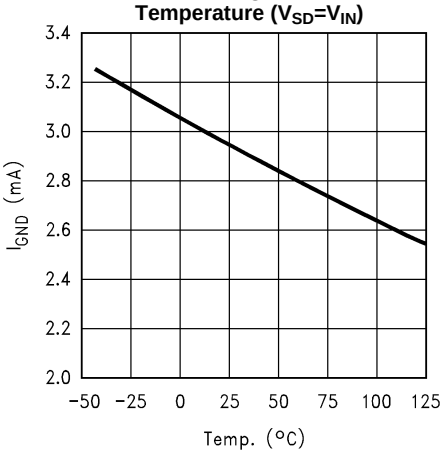

Figure 8.

Ground Current vs Temperature (V_{SD}=0V

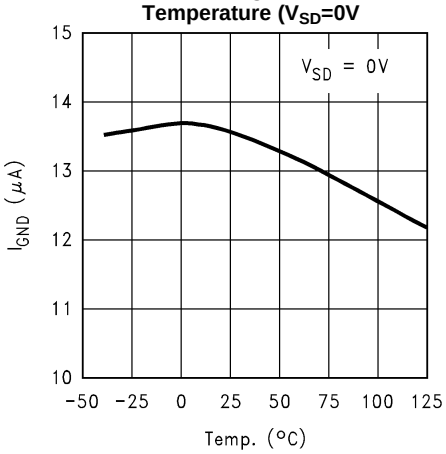

Figure 9.

Copyright © 2000–2013, Texas Instruments Incorporated

Typical Performance Characteristics (continued)

Unless otherwise specified, $V_{IN} = V_{O(NOM)} + 1V$, $V_{OUT} = 2.5V$, $C_{OUT} = 33\mu F$, $I_{OUT} = 10mA$, $C_{IN} = 68\mu F$, $V_{SD} = V_{IN}$, and $T_A = 25°C$.

Ground Pin Current vs Shutdown Pin Voltage

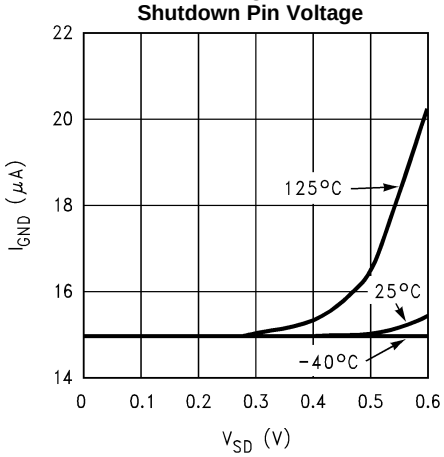

Figure 10.

Input Voltage vs Output Voltage

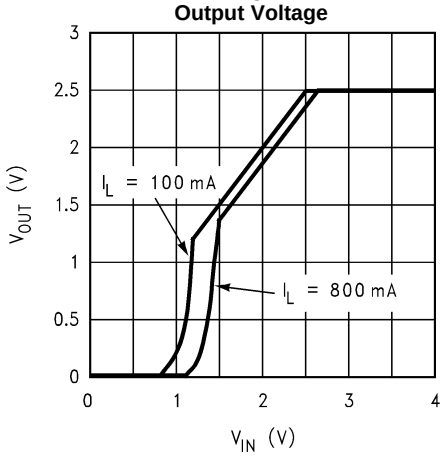

Figure 11.

Output Noise Density, V_{OUT}= 2.5V

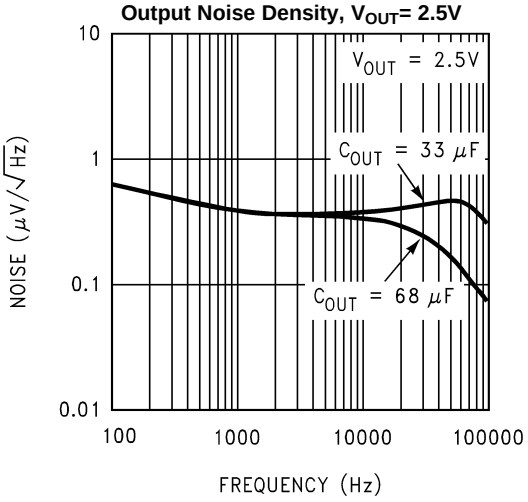

Figure 12.

Output Noise Density, V_{OUT}= 5V

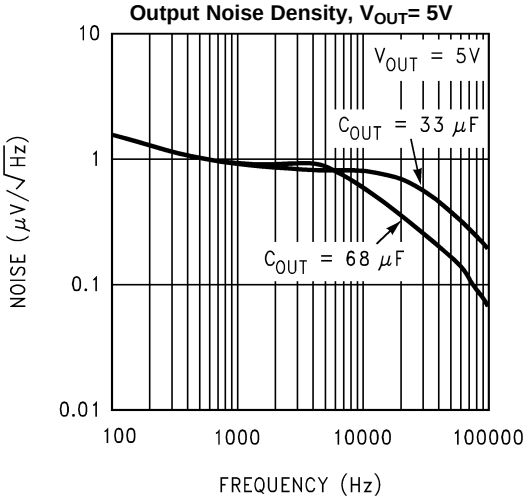

Figure 13.

Load Transient Response

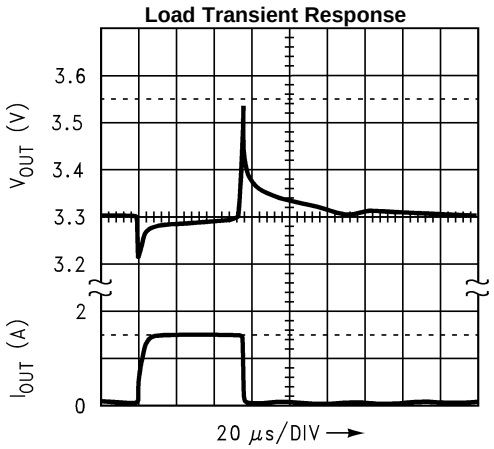

Figure 14.

Ripple Rejection vs Frequency

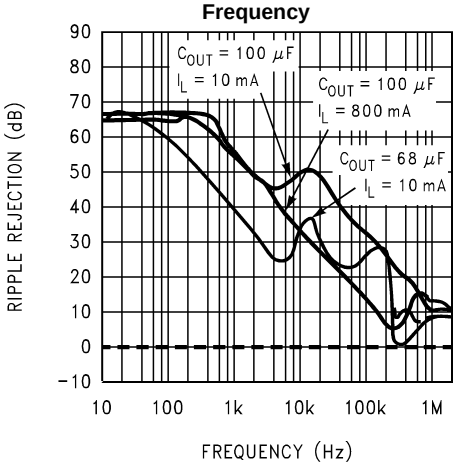

Figure 15.

Copyright © 2000–2013, Texas Instruments Incorporated

Typical Performance Characteristics (continued)

Unless otherwise specified, $V_{IN} = V_{O(NOM)} + 1V$, $V_{OUT} = 2.5V$, $C_{OUT} = 33\mu F$, $I_{OUT} = 10mA$, $C_{IN} = 68\mu F$, $V_{SD} = V_{IN}$, and $T_A = 25°C$.

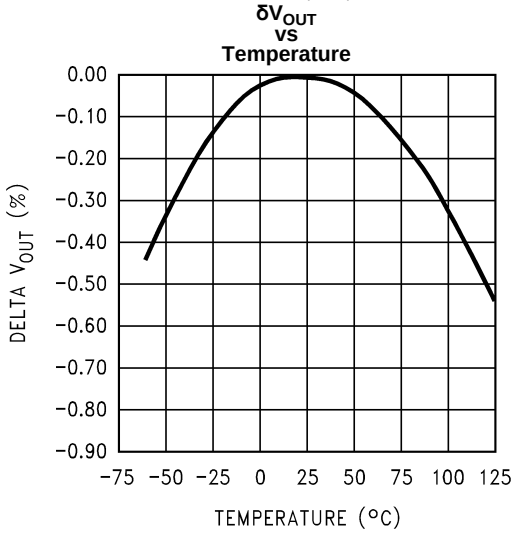

Figure 16.

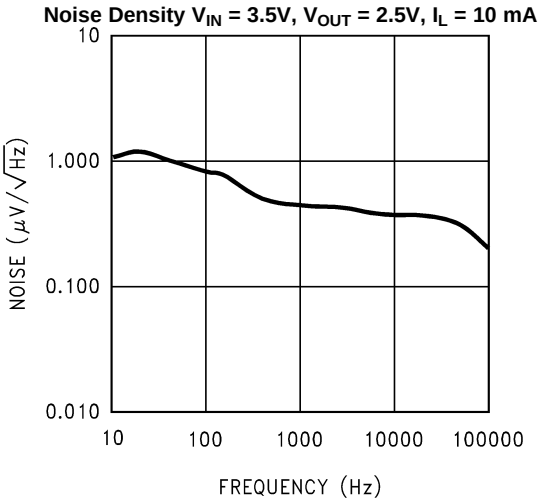

Figure 17.

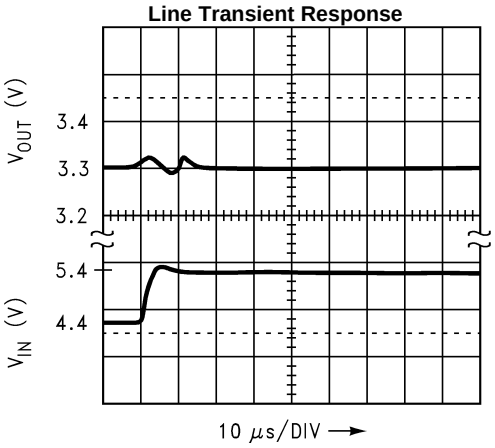

Figure 18.

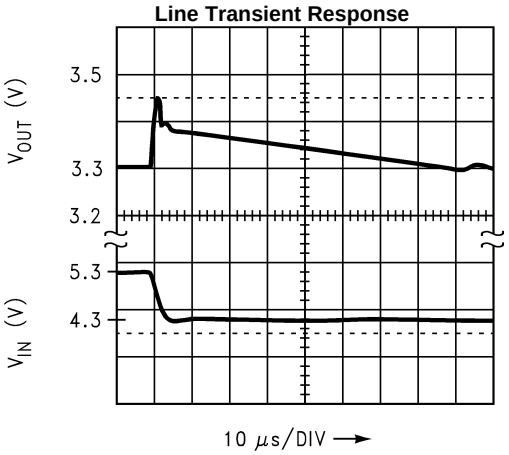

Figure 19.

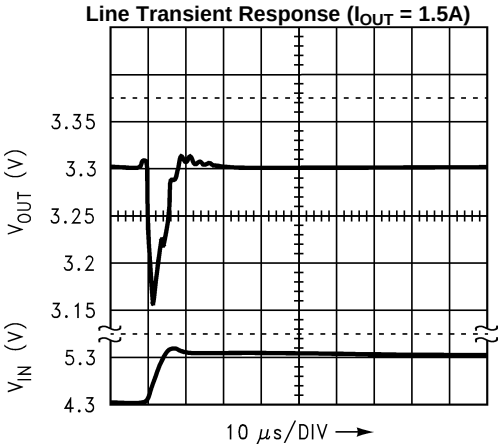

Figure 20.

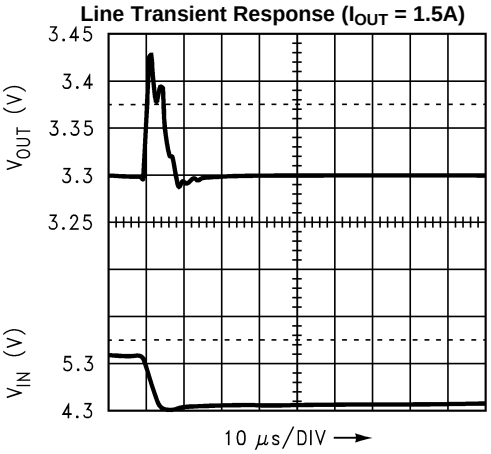

Figure 21.

APPLICATIONS INFORMATION

EXTERNAL CAPACITORS

Like any low-dropout regulator, external capacitors are required to assure stability. these capacitors must be correctly selected for proper performance.

INPUT CAPACITOR: The LP3962/5 requires a low source impedance to maintain regulator stability because the internal bias circuitry is connected directly to V_{IN}. The input capacitor must be located less than 1 cm from the LP3962/5 device and connected directly to the input and ground pins using traces which have no other currents flowing through them (see PCB LAYOUT).

The minimum allowable input capacitance for a given application depends on the type of the capacitor and ESR (equivalent series resistance). A lower ESR capacitor allows the use of less capacitance, while higher ESR types (like aluminum electrolytics) require more capacitance.

The lowest value of input capacitance that can be used for stable full-load operation is 68 µF (assuming it is a ceramic or low-ESR Tantalum with ESR less than 100 mΩ).

To determine the minimum input capacitance amount and ESR value, an approximation which should be used is:

$$C_{IN}\ \text{ESR}\ (m\Omega) / C_{IN}\ (\mu F) \leq 1.5$$

This shows that input capacitors with higher ESR values can be used if sufficient total capacitance is provided. Capacitor types (aluminum, ceramic, and tantalum) can be mixed in parallel, but the total equivalent input capacitance/ESR must be defined as above to assure stable operation.

IMPORTANT: The input capacitor must maintain its ESR and capacitance in the "stable range" over the entire temperature range of the application to assure stability (see CAPACITOR CHARACTERISTICS).

OUTPUT CAPACITOR: An output capacitor is also required for loop stability. It must be located less than 1 cm from the LP3962/5 device and connected directly to the output and ground pins using traces which have no other currents flowing through them (see PCB LAYOUT).

The minimum value of the output capacitance that can be used for stable full-load operation is 33 µF, but it may be increased without limit. The output capacitor's ESR is critical because it forms a zero to provide phase lead which is required for loop stability. The ESR must fall within the specified range:

$$0.2\Omega \leq C_{OUT}\ \text{ESR} \leq 5\Omega$$

The lower limit of 200 mΩ means that ceramic capacitors are not suitable for use as LP3962/5 output capacitors (but can be used on the input). Some ceramic capacitance can be used on the output if the total equivalent ESR is in the stable range: when using a 100 µF Tantalum as the output capacitor, approximately 3 µF of ceramic capacitance can be applied before stability becomes marginal.

IMPORTANT: The output capacitor must meet the requirements for minimum amount of capacitance and also have an appropriate ESR value over the full temperature range of the application to assure stability (see CAPACITOR CHARACTERISTICS).

SELECTING A CAPACITOR

It is important to note that capacitance tolerance and variation with temperature must be taken into consideration when selecting a capacitor so that the minimum required amount of capacitance is provided over the full operating temperature range. In general, a good Tantalum capacitor will show very little capacitance variation with temperature, but a ceramic may not be as good (depending on dielectric type). Aluminum electrolytics also typically have large temperature variation of capacitance value.

Equally important to consider is a capacitor's ESR change with temperature: this is not an issue with ceramics, as their ESR is extremely low. However, it is very important in Tantalum and aluminum electrolytic capacitors. Both show increasing ESR at colder temperatures, but the increase in aluminum electrolytic capacitors is so severe they may not be feasible for some applications (see CAPACITOR CHARACTERISTICS).

Copyright © 2000–2013, Texas Instruments Incorporated

CAPACITOR CHARACTERISTICS

CERAMIC: For values of capacitance in the 10 to 100 µF range, ceramics are usually larger and more costly than tantalums but give superior AC performance for bypassing high frequency noise because of very low ESR (typically less than 10 mΩ). However, some dielectric types do not have good capacitance characteristics as a function of voltage and temperature.

Z5U and Y5V dielectric ceramics have capacitance that drops severely with applied voltage. A typical Z5U or Y5V capacitor can lose 60% of its rated capacitance with half of the rated voltage applied to it. The Z5U and Y5V also exhibit a severe temperature effect, losing more than 50% of nominal capacitance at high and low limits of the temperature range.

X7R and X5R dielectric ceramic capacitors are strongly recommended if ceramics are used, as they typically maintain a capacitance range within ±20% of nominal over full operating ratings of temperature and voltage. Of course, they are typically larger and more costly than Z5U/Y5U types for a given voltage and capacitance.

TANTALUM: Solid Tantalum capacitors are recommended for use on the output because their typical ESR is very close to the ideal value required for loop compensation. They also work well as input capacitors if selected to meet the ESR requirements previously listed.

Tantalums also have good temperature stability: a good quality Tantalum will typically show a capacitance value that varies less than 10-15% across the full temperature range of 125°C to −40°C. ESR will vary only about 2X going from the high to low temperature limits.

The increasing ESR at lower temperatures can cause oscillations when marginal quality capacitors are used (if the ESR of the capacitor is near the upper limit of the stability range at room temperature).

ALUMINUM: This capacitor type offers the most capacitance for the money. The disadvantages are that they are larger in physical size, not widely available in surface mount, and have poor AC performance (especially at higher frequencies) due to higher ESR and ESL.

Compared by size, the ESR of an aluminum electrolytic is higher than either Tantalum or ceramic, and it also varies greatly with temperature. A typical aluminum electrolytic can exhibit an ESR increase of as much as 50X when going from 25°C down to −40°C.

It should also be noted that many aluminum electrolytics only specify impedance at a frequency of 120 Hz, which indicates they have poor high frequency performance. Only aluminum electrolytics that have an impedance specified at a higher frequency (between 20 kHz and 100 kHz) should be used for the LP396X. Derating must be applied to the manufacturer's ESR specification, since it is typically only valid at room temperature.

Any applications using aluminum electrolytics should be thoroughly tested at the lowest ambient operating temperature where ESR is maximum.

PCB LAYOUT

Good PC layout practices must be used or instability can be induced because of ground loops and voltage drops. The input and output capacitors must be directly connected to the input, output, and ground pins of the LP3962/5 using traces which do not have other currents flowing in them Kelvin connect).

The best way to do this is to lay out C_{IN} and C_{OUT} near the device with short traces to the V_{IN}, V_{OUT}, and ground pins. The regulator ground pin should be connected to the external circuit ground so that the regulator and its capacitors have a "single point ground".

It should be noted that stability problems have been seen in applications where "vias" to an internal ground plane were used at the ground points of the LP3962/5 IC and the input and output capacitors. This was caused by varying ground potentials at these nodes resulting from current flowing through the ground plane. Using a single point ground technique for the regulator and it's capacitors fixed the problem.

Since high current flows through the traces going into V_{IN} and coming from V_{OUT}, Kelvin connect the capacitor leads to these pins so there is no voltage drop in series with the input and output capacitors.

Copyright © 2000–2013, Texas Instruments Incorporated

RFI/EMI SUSCEPTIBILITY

RFI (radio frequency interference) and EMI (electromagnetic interference) can degrade any integrated circuit's performance because of the small dimensions of the geometries inside the device. In applications where circuit sources are present which generate signals with significant high frequency energy content (> 1 MHz), care must be taken to ensure that this does not affect the IC regulator.

If RFI/EMI noise is present on the input side of the LP396X regulator (such as applications where the input source comes from the output of a switching regulator), good ceramic bypass capacitors must be used at the input pin of the LP396X.

If a load is connected to the LP396X output which switches at high speed (such as a clock), the high-frequency current pulses required by the load must be supplied by the capacitors on the LP396X output. Since the bandwidth of the regulator loop is less than 100 kHz, the control circuitry cannot respond to load changes above that frequency. The means the effective output impedance of the LP396X at frequencies above 100 kHz is determined only by the output capacitor(s).

In applications where the load is switching at high speed, the output of the LP396X may need RF isolation from the load. It is recommended that some inductance be placed between the LP396X output capacitor and the load, and good RF bypass capacitors be placed directly across the load.

PCB layout is also critical in high noise environments, since RFI/EMI is easily radiated directly into PC traces. Noisy circuitry should be isolated from "clean" circuits where possible, and grounded through a separate path. At MHz frequencies, ground planes begin to look inductive and RFI/EMI can cause ground bounce across the ground plane.

In multi-layer PCB applications, care should be taken in layout so that noisy power and ground planes do not radiate directly into adjacent layers which carry analog power and ground.

OUTPUT ADJUSTMENT

An adjustable output device has output voltage range of 1.216V to 5.1V. To obtain a desired output voltage, can be used with R1 always a 10kΩ resistor.

$$R2 = R1\left(\frac{V_{OUT}}{1.216} - 1\right)$$

For output stability, C_F must be between 68pF and 100pF.

TURN-ON CHARACTERISTICS FOR OUTPUT VOLTAGES PROGRAMMED TO 2.0V OR BELOW

As Vin increases during start-up, the regulator output will track the input until Vin reaches the minimum operating voltage (typically about 2.2V). For output voltages programmed to 2.0V or below, the regulator output may momentarily exceed its programmed output voltage during start up. Outputs programmed to voltages above 2.0V are not affected by this behavior.

OUTPUT NOISE

Noise is specified in two ways-

Spot Noise or **Output noise density** is the RMS sum of all noise sources, measured at the regulator output, at a specific frequency (measured with a 1Hz bandwidth). This type of noise is usually plotted on a curve as a function of frequency.

Total output Noise or **Broad-band noise** is the RMS sum of spot noise over a specified bandwidth, usually several decades of frequencies.

Attention should be paid to the units of measurement. Spot noise is measured in units μV/√Hz or nV/√Hz and total output noise is measured in μV(rms).

Copyright © 2000–2013, Texas Instruments Incorporated

The primary source of noise in low-dropout regulators is the internal reference. In CMOS regulators, noise has a low frequency component and a high frequency component, which depend strongly on the silicon area and quiescent current. Noise can be reduced in two ways: by increasing the transistor area or by increasing the current drawn by the internal reference. Increasing the area will decrease the chance of fitting the die into a smaller package. Increasing the current drawn by the internal reference increases the total supply current (ground pin current). Using an optimized trade-off of ground pin current and die size, LP3962/LP3965 achieves low noise performance and low quiescent current operation.

The total output noise specification for LP3962/LP3965 is presented in the Electrical Characteristics table. The Output noise density at different frequencies is represented by a curve under typical performance characteristics.

SHORT-CIRCUIT PROTECTION

The LP3962and LP3965 is short circuit protected and in the event of a peak over-current condition, the short-circuit control loop will rapidly drive the output PMOS pass element off. Once the power pass element shuts down, the control loop will rapidly cycle the output on and off until the average power dissipation causes the thermal shutdown circuit to respond to servo the on/off cycling to a lower frequency. Please refer to the section on thermal information for power dissipation calculations.

$\overline{\text{ERROR}}$ FLAG OPERATION

The LP3962/LP3965 produces a logic low signal at the $\overline{\text{Error}}$ Flag pin when the output drops out of regulation due to low input voltage, current limiting, or thermal limiting. This flag has a built in hysteresis. The timing diagram in Figure 22 shows the relationship between the $\overline{\text{ERROR}}$ and the output voltage. In this example, the input voltage is changed to demonstrate the functionality of the Error Flag.

The internal $\overline{\text{Error}}$ flag comparator has an open drain output stage. Hence, the $\overline{\text{ERROR}}$ pin should be pulled high through a pull up resistor. Although the $\overline{\text{ERROR}}$ pin can sink current of 1mA, this current is energy drain from the input supply. Hence, the value of the pull up resistor should be in the range of 10kΩ to 1MΩ. **The $\overline{\text{ERROR}}$ pin must be connected to ground if this function is not used.** It should also be noted that when the shutdown pin is pulled low, the $\overline{\text{ERROR}}$ pin is forced to be invalid for reasons of saving power in shutdown mode.

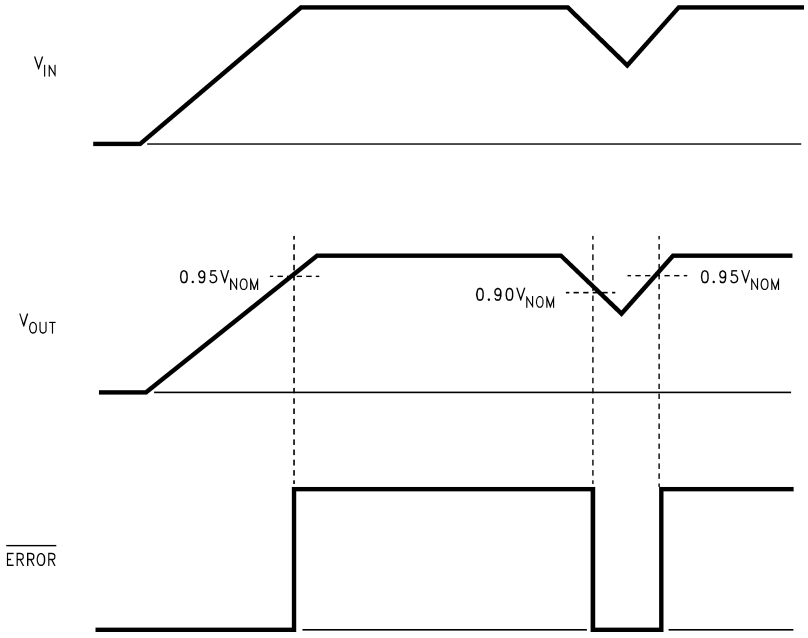

Figure 22. $\overline{\text{Error}}$ Flag Operation

SENSE PIN

In applications where the regulator output is not very close to the load, LP3965 can provide better remote load regulation using the SENSE pin. Figure 23 depicts the advantage of the SENSE option. LP3962 regulates the voltage at the output pin. Hence, the voltage at the remote load will be the regulator output voltage minus the drop across the trace resistance. For example, in the case of a 3.3V output, if the trace resistance is 100mΩ, the voltage at the remote load will be 3.15V with 1.5 A of load current, I_{LOAD}. The LP3965 regulates the voltage at the sense pin. Connecting the sense pin to the remote load will provide regulation at the remote load, as shown in Figure 23. If the sense option pin is not required, the sense pin must be connected to the V_{OUT} pin.

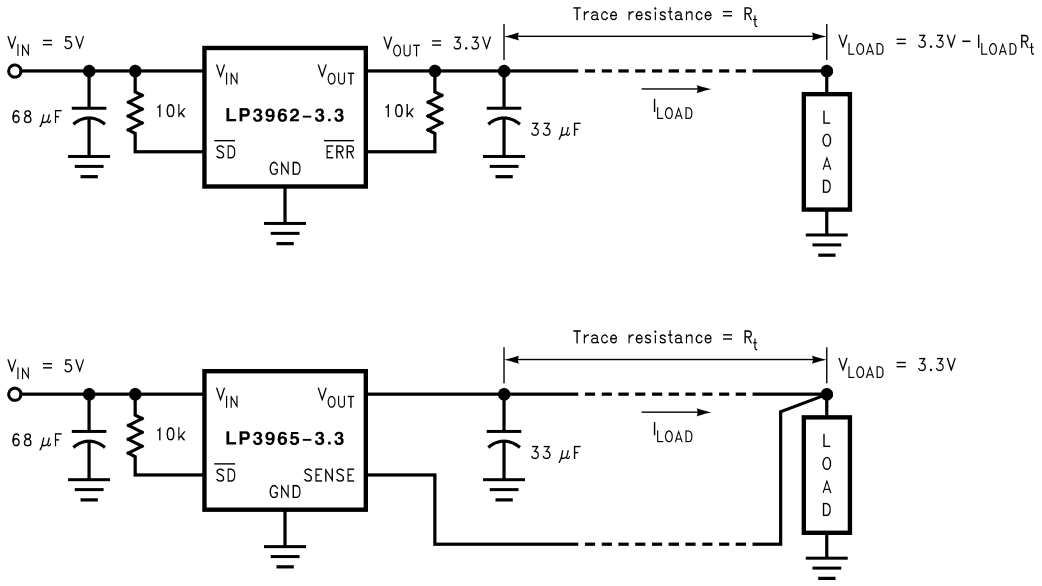

Figure 23. Improving remote load regulation using LP3965

SHUTDOWN OPERATION

A CMOS Logic level signal at the shutdown ($\overline{SD}$) pin will turn-off the regulator. Pin $\overline{SD}$ must be actively terminated through a 10kΩ pull-up resistor for a proper operation. If this pin is driven from a source that actively pulls high and low (such as a CMOS rail to rail comparator), the pull-up resistor is not required. This pin must be tied to Vin if not used.

DROPOUT VOLTAGE

The dropout voltage of a regulator is defined as the minimum input-to-output differential required to stay within 2% of the output voltage. The LP3962/LP3965 use an internal MOSFET with an Rds(on) of 240mΩ (typically). For CMOS LDOs, the dropout voltage is the product of the load current and the Rds(on) of the internal MOSFET.

REVERSE CURRENT PATH

The internal MOSFET in LP3962and LP3965 has an inherent parasitic diode. During normal operation, the input voltage is higher than the output voltage and the parasitic diode is reverse biased. However, if the output is pulled above the input in an application, then current flows from the output to the input as the parasitic diode gets forward biased. The output can be pulled above the input as long as the current in the parasitic diode is limited to 200mA continuous and 1A peak.

MAXIMUM OUTPUT CURRENT CAPABILITY

LP3962 and LP3965 can deliver a continuous current of 1.5 A over the full operating temperature range. A heatsink may be required depending on the maximum power dissipation and maximum ambient temperature of the application. Under all possible conditions, the junction temperature must be within the range specified under operating conditions. The total power dissipation of the device is given by:

$$P_D = (V_{IN} - V_{OUT})I_{OUT} + (V_{IN})I_{GND}$$

Copyright © 2000–2013, Texas Instruments Incorporated

where I_{GND} is the operating ground current of the device (specified under Electrical Characteristics).

The maximum allowable temperature rise (T_{Rmax}) depends on the maximum ambient temperature (T_{Amax}) of the application, and the maximum allowable junction temperature(T_{Jmax}):

$T_{Rmax} = T_{Jmax} - T_{Amax}$

The maximum allowable value for junction to ambient Thermal Resistance, θ_{JA}, can be calculated using the formula:

$\theta_{JA} = T_{Rmax} / P_D$

LP3962 and LP3965 are available in TO-220, SFM/TO-263, and SOT-223 packages. The thermal resistance depends on amount of copper area or heat sink, and on air flow. If the maximum allowable value of θ_{JA} calculated above is ≥ 60 °C/W for TO-220 package, ≥60 °C/W for SFM/TO-263 package, and ≥ 140 °C/W for SOT-223 package, no heatsink is needed since the package can dissipate enough heat to satisfy these requirements. If the value for allowable θ_{JA} falls below these limits, a heat sink is required.

HEATSINKING TO-220 PACKAGES

The thermal resistance of a TO-220 package can be reduced by attaching it to a heat sink or a copper plane on a PC board. If a copper plane is to be used, the values of θ_{JA} will be same as shown in next section for SFM/TO-263 package.

The heatsink to be used in the application should have a heatsink to ambient thermal resistance,

$\theta_{HA} \leq \theta_{JA} - \theta_{CH} - \theta_{JC}$.

In this equation, θ_{CH} is the thermal resistance from the junction to the surface of the heat sink and θ_{JC} is the thermal resistance from the junction to the surface of the case. θ_{JC} is about 3°C/W for a TO-220 package. The value for θ_{CH} depends on method of attachment, insulator, etc. θ_{CH} varies between 1.5°C/W to 2.5°C/W. If the exact value is unknown, 2°C/W can be assumed.

HEATSINKING SFM/TO-263 AND SOT-223 PACKAGES

The SFM/TO-263 and SOT-223 packages use the copper plane on the PCB as a heatsink. The tab of these packages are soldered to the copper plane for heat sinking. Figure 24 shows a curve for the θ_{JA} of SFM/TO-263 package for different copper area sizes, using a typical PCB with 1 ounce copper and no solder mask over the copper area for heat sinking.

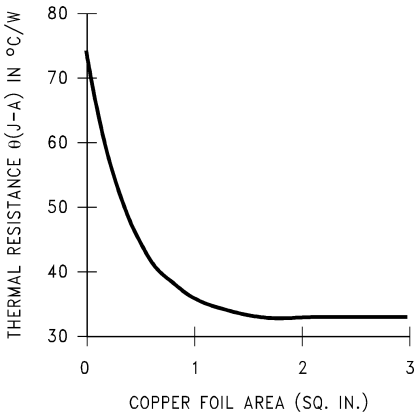

Figure 24. θ_{JA} vs Copper(1 Ounce) Area for SFM/TO-263 package

As shown in the figure, increasing the copper area beyond 1 square inch produces very little improvement. The minimum value for θ_{JA} for the SFM/TO-263 packag mounted to a PCB is 32°C/W.

Figure 25 shows the maximum allowable power dissipation for SFM/TO-263 packages for different ambient temperatures, assuming θ_{JA} is 35°C/W and the maximum junction temperature is 125°C.

Copyright © 2000–2013, Texas Instruments Incorporated

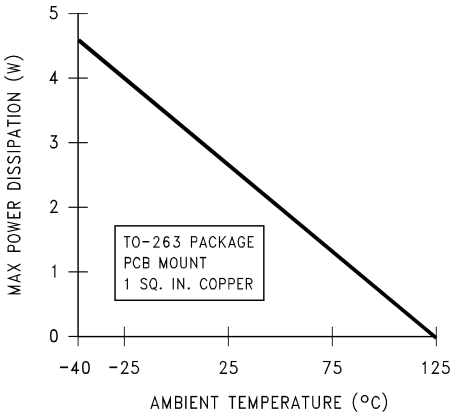

Figure 25. Maximum power dissipation vs ambient temperature for SFM/TO-263 package

Figure 26 shows a curve for the θ_{JA} of SOT-223 package for different copper area sizes, using a typical PCB with 1 ounce copper and no solder mask over the copper area for heat sinking.

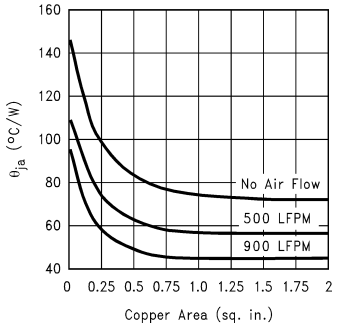

Figure 26. θ_{JA} vs Copper(1 Ounce) Area for SOT-223 package

Figure 27 through Figure 35 show different layout scenarios for SOT-223 package.

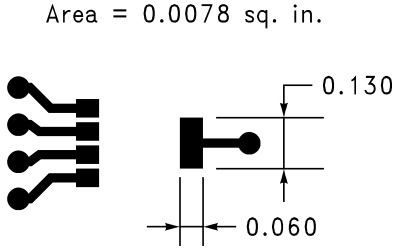

Figure 27. SCENARIO A, θ_{JA} = 148°C/W

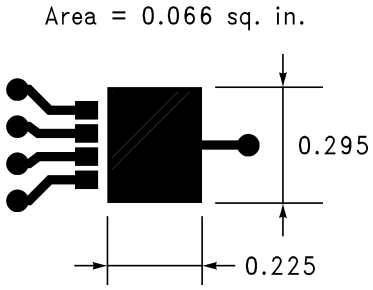

Figure 28. SCENARIO B, θ_{JA} = 125°C/W

Copyright © 2000–2013, Texas Instruments Incorporated

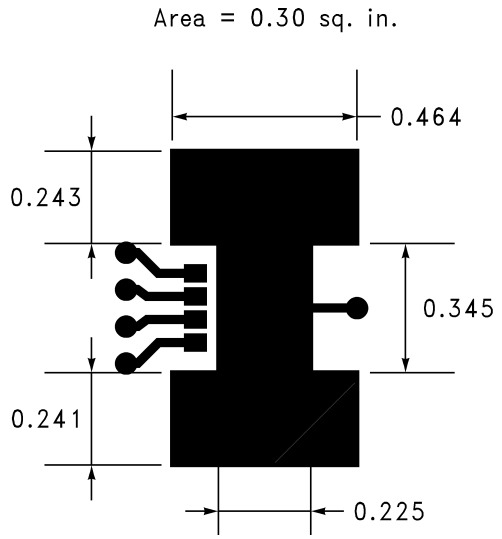

Figure 29. SCENARIO C, θ_{JA} = 92°C/W

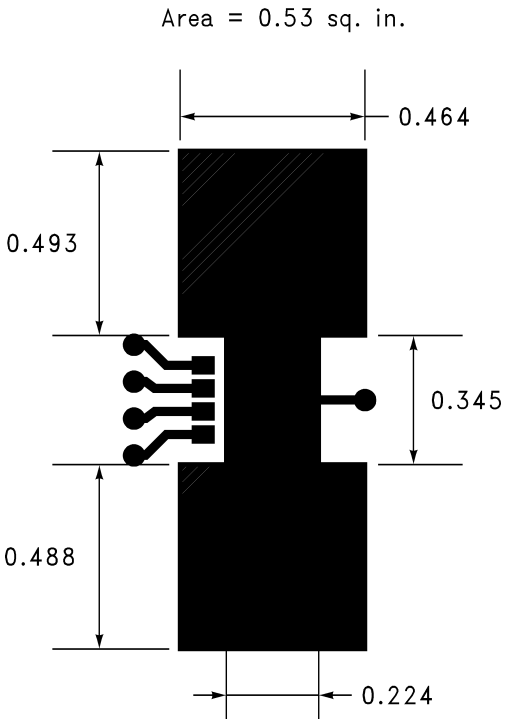

Figure 30. SCENARIO D, θ_{JA} = 83°C/W

Copyright © 2000–2013, Texas Instruments Incorporated

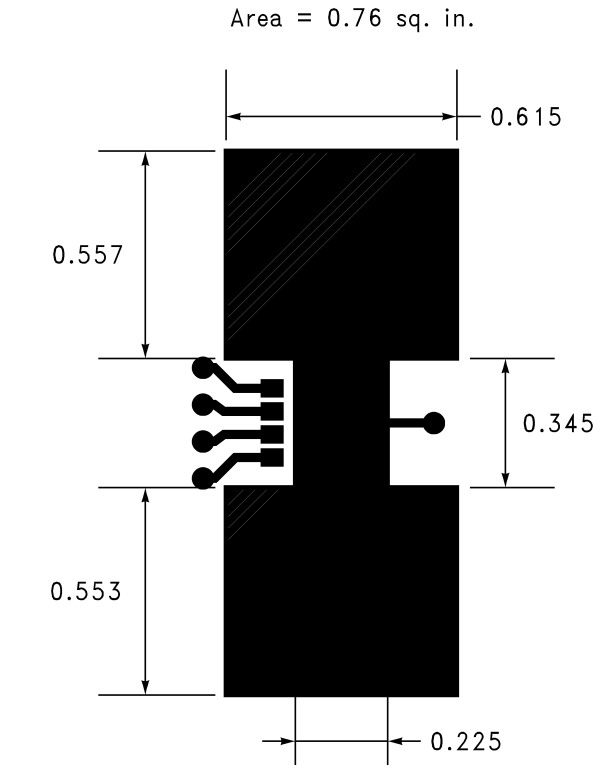

Figure 31. SCENARIO E, θ_{JA} = 77°C/W

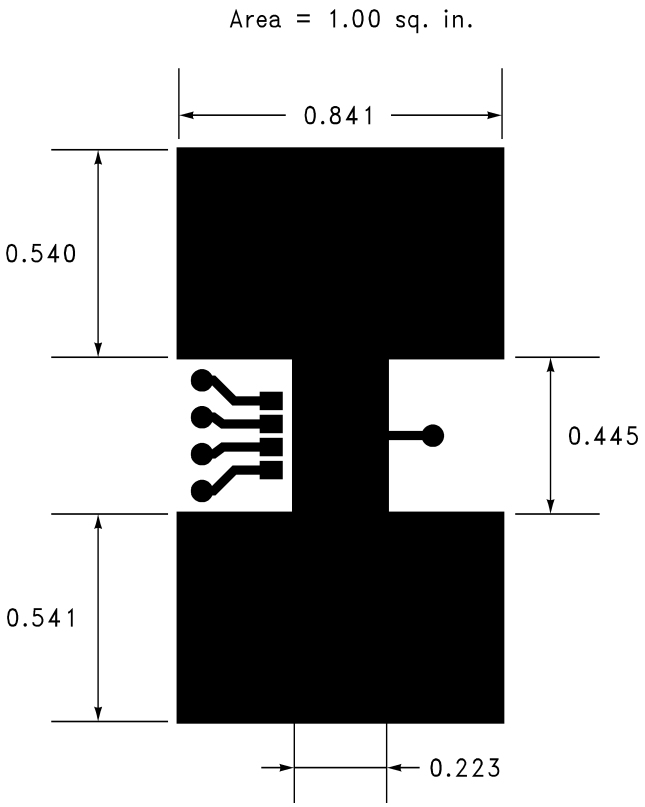

Figure 32. SCENARIO F, θ_{JA} = 75°C/W

Copyright © 2000–2013, Texas Instruments Incorporated

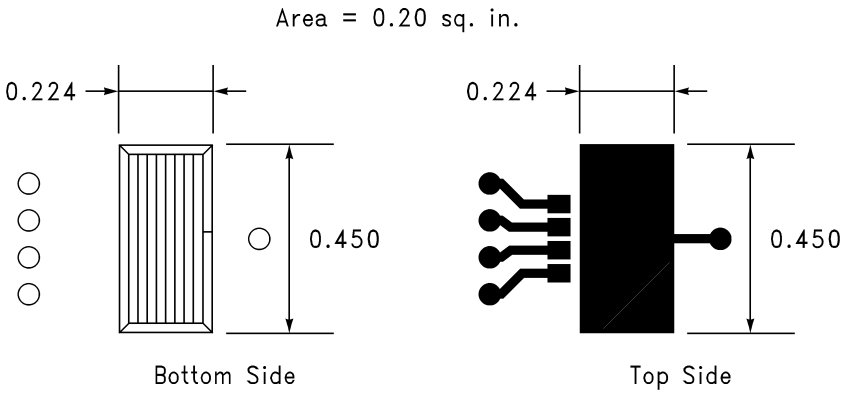

Figure 33. SCENARIO G, θ_{JA} = 113°C/W

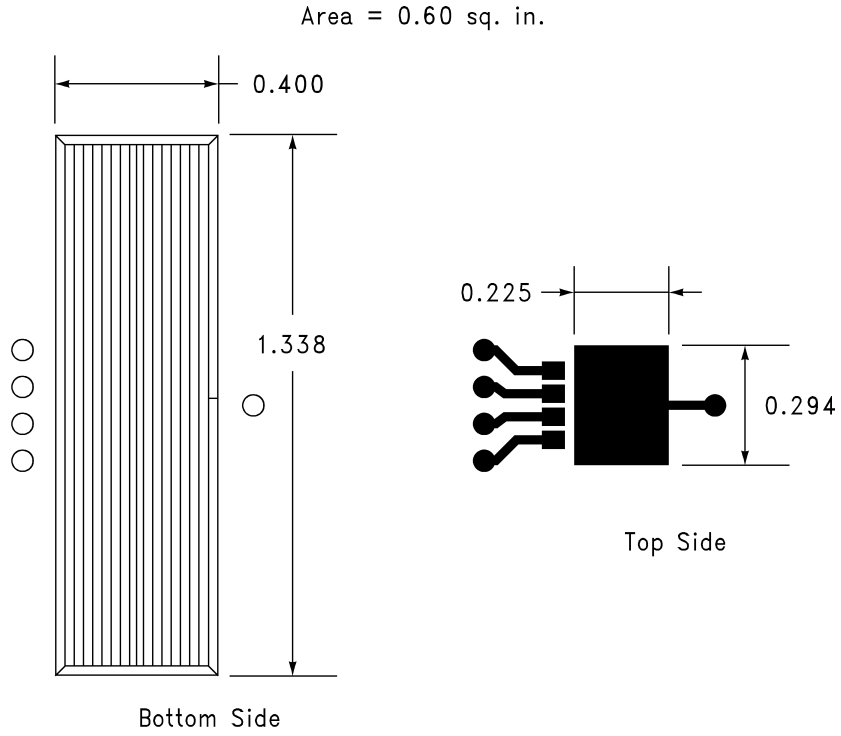

Figure 34. SCENARIO H, θ_{JA} = 79°C/W

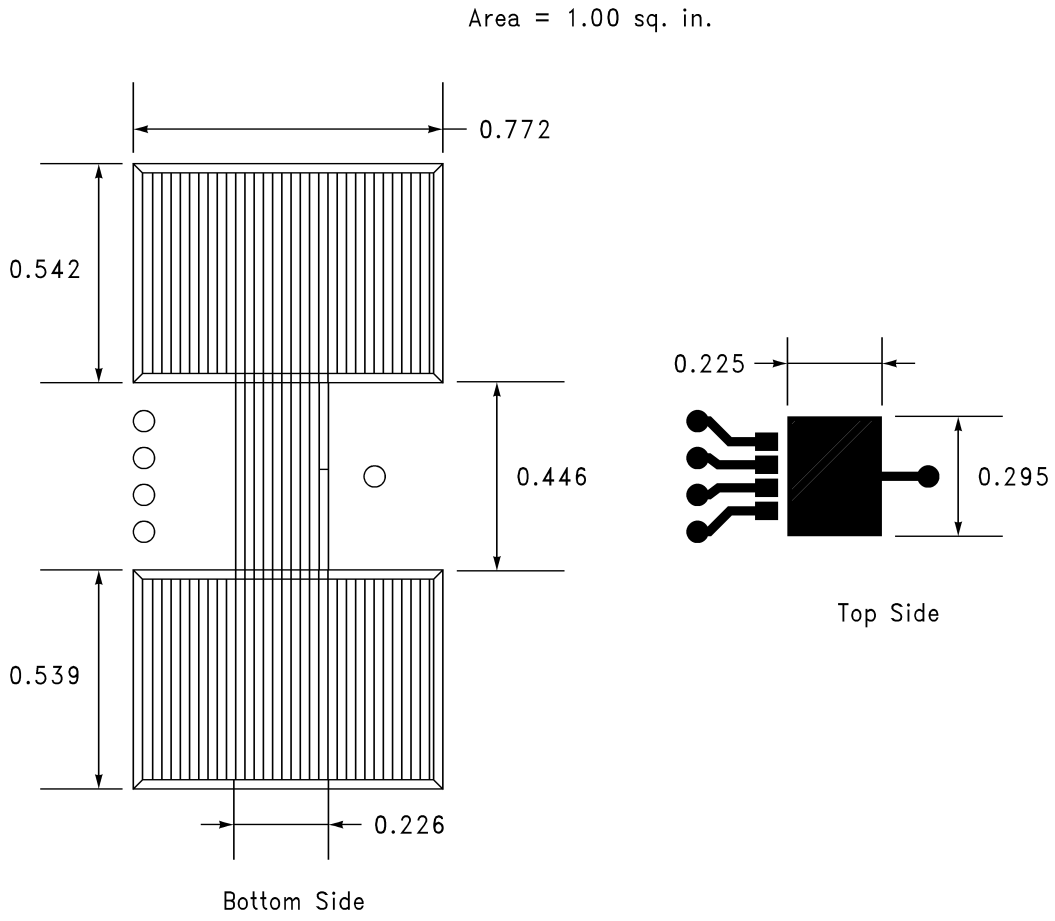

Figure 35. SCENARIO I, θ_{JA} = 78.5°C/W

Copyright © 2000–2013, Texas Instruments Incorporated

REVISION HISTORY

Changes from Revision G (April 2013) to Revision H	Page
• Changed layout of National Data Sheet to TI format	20

Copyright © 2000–2013, Texas Instruments Incorporated

PACKAGING INFORMATION

Orderable Device	Status (1)	Package Type	Package Drawing	Pins	Package Qty	Eco Plan (2)	Lead/Ball Finish (6)	MSL Peak Temp (3)	Op Temp (°C)	Device Marking (4/5)	Samples
LP3962EMP-1.8	NRND	SOT-223	NDC	5	1000	TBD	Call TI	Call TI	-40 to 125	LBCB	
LP3962EMP-1.8/NOPB	ACTIVE	SOT-223	NDC	5	1000	Green (RoHS & no Sb/Br)	CU SN	Level-1-260C-UNLIM	-40 to 125	LBCB	Samples
LP3962EMP-2.5	NRND	SOT-223	NDC	5	1000	TBD	Call TI	Call TI	-40 to 125	LBDB	
LP3962EMP-2.5/NOPB	ACTIVE	SOT-223	NDC	5	1000	Green (RoHS & no Sb/Br)	CU SN	Level-1-260C-UNLIM	-40 to 125	LBDB	Samples
LP3962EMP-3.3	NRND	SOT-223	NDC	5	1000	TBD	Call TI	Call TI	-40 to 125	LBEB	
LP3962EMP-3.3/NOPB	ACTIVE	SOT-223	NDC	5	1000	Green (RoHS & no Sb/Br)	CU SN	Level-1-260C-UNLIM	-40 to 125	LBEB	Samples
LP3962EMPX-2.5/NOPB	ACTIVE	SOT-223	NDC	5	2000	Green (RoHS & no Sb/Br)	CU SN	Level-1-260C-UNLIM	-40 to 125	LBDB	Samples
LP3962ES-1.8	NRND	DDPAK/ TO-263	KTT	5	45	TBD	Call TI	Call TI	-40 to 125	LP3962ES -1.8	
LP3962ES-1.8/NOPB	ACTIVE	DDPAK/ TO-263	KTT	5	45	Pb-Free (RoHS Exempt)	CU SN	Level-3-245C-168 HR	-40 to 125	LP3962ES -1.8	Samples
LP3962ES-2.5	NRND	DDPAK/ TO-263	KTT	5	45	TBD	Call TI	Call TI	-40 to 125	LP3962ES -2.5	
LP3962ES-2.5/NOPB	ACTIVE	DDPAK/ TO-263	KTT	5	45	Pb-Free (RoHS Exempt)	CU SN	Level-3-245C-168 HR	-40 to 125	LP3962ES -2.5	Samples
LP3962ES-3.3	NRND	DDPAK/ TO-263	KTT	5	45	TBD	Call TI	Call TI	-40 to 125	LP3962ES -3.3	
LP3962ES-3.3/NOPB	ACTIVE	DDPAK/ TO-263	KTT	5	45	Pb-Free (RoHS Exempt)	CU SN	Level-3-245C-168 HR	-40 to 125	LP3962ES -3.3	Samples
LP3962ESX-1.8/NOPB	ACTIVE	DDPAK/ TO-263	KTT	5	500	Pb-Free (RoHS Exempt)	CU SN	Level-3-245C-168 HR	-40 to 125	LP3962ES -1.8	Samples
LP3962ESX-2.5/NOPB	ACTIVE	DDPAK/ TO-263	KTT	5	500	Pb-Free (RoHS Exempt)	CU SN	Level-3-245C-168 HR	-40 to 125	LP3962ES -2.5	Samples
LP3962ESX-3.3	NRND	DDPAK/ TO-263	KTT	5	500	TBD	Call TI	Call TI	-40 to 125	LP3962ES -3.3	
LP3962ESX-3.3/NOPB	ACTIVE	DDPAK/ TO-263	KTT	5	500	Pb-Free (RoHS Exempt)	CU SN	Level-3-245C-168 HR	-40 to 125	LP3962ES -3.3	Samples
LP3962ESX-5.0/NOPB	ACTIVE	DDPAK/ TO-263	KTT	5	500	Pb-Free (RoHS Exempt)	CU SN	Level-3-245C-168 HR	-40 to 125	LP3962ES -5.0	Samples
LP3962ET-3.3/LB05	NRND	TO-220	NEB	5	45	TBD	Call TI	Call TI		LP3962ET	

Orderable Device	Status (1)	Package Type	Package Drawing	Pins	Package Qty	Eco Plan (2)	Lead/Ball Finish (6)	MSL Peak Temp (3)	Op Temp (°C)	Device Marking (4/5)	Samples
										-3.3	
LP3962ET-3.3/NOPB	ACTIVE	TO-220	NDH	5	45	Green (RoHS & no Sb/Br)	CU SN	Level-1-NA-UNLIM	-40 to 125	LP3962ET -3.3	Samples
LP3965EMP-1.8/NOPB	ACTIVE	SOT-223	NDC	5	1000	Green (RoHS & no Sb/Br)	CU SN	Level-1-260C-UNLIM	-40 to 125	LBKB	Samples
LP3965EMP-2.5	NRND	SOT-223	NDC	5	1000	TBD	Call TI	Call TI	-40 to 125	LBLB	
LP3965EMP-2.5/NOPB	ACTIVE	SOT-223	NDC	5	1000	Green (RoHS & no Sb/Br)	CU SN	Level-1-260C-UNLIM	-40 to 125	LBLB	Samples
LP3965EMP-3.3	NRND	SOT-223	NDC	5	1000	TBD	Call TI	Call TI	-40 to 125	LBNB	
LP3965EMP-3.3/NOPB	ACTIVE	SOT-223	NDC	5	1000	Green (RoHS & no Sb/Br)	CU SN	Level-1-260C-UNLIM	-40 to 125	LBNB	Samples
LP3965EMP-ADJ	NRND	SOT-223	NDC	5	1000	TBD	Call TI	Call TI	-40 to 125	LBRB	
LP3965EMP-ADJ/NOPB	ACTIVE	SOT-223	NDC	5	1000	Green (RoHS & no Sb/Br)	CU SN	Level-1-260C-UNLIM	-40 to 125	LBRB	Samples
LP3965EMPX-ADJ/NOPB	ACTIVE	SOT-223	NDC	5	2000	Green (RoHS & no Sb/Br)	CU SN	Level-1-260C-UNLIM	-40 to 125	LBRB	Samples
LP3965ES-1.8	NRND	DDPAK/ TO-263	KTT	5	45	TBD	Call TI	Call TI	-40 to 125	LP3965ES -1.8	
LP3965ES-1.8/NOPB	ACTIVE	DDPAK/ TO-263	KTT	5	45	Pb-Free (RoHS Exempt)	CU SN	Level-3-245C-168 HR	-40 to 125	LP3965ES -1.8	Samples
LP3965ES-2.5	NRND	DDPAK/ TO-263	KTT	5	45	TBD	Call TI	Call TI	-40 to 125	LP3965ES -2.5	
LP3965ES-2.5/NOPB	ACTIVE	DDPAK/ TO-263	KTT	5	45	Pb-Free (RoHS Exempt)	CU SN	Level-3-245C-168 HR	-40 to 125	LP3965ES -2.5	Samples
LP3965ES-3.3	NRND	DDPAK/ TO-263	KTT	5	45	TBD	Call TI	Call TI	-40 to 125	LP3965ES -3.3	
LP3965ES-3.3/NOPB	ACTIVE	DDPAK/ TO-263	KTT	5	45	Pb-Free (RoHS Exempt)	CU SN	Level-3-245C-168 HR	-40 to 125	LP3965ES -3.3	Samples
LP3965ES-ADJ	NRND	DDPAK/ TO-263	KTT	5	45	TBD	Call TI	Call TI	-40 to 125	LP3965ES -ADJ	
LP3965ES-ADJ/NOPB	ACTIVE	DDPAK/ TO-263	KTT	5	45	Pb-Free (RoHS Exempt)	CU SN	Level-3-245C-168 HR	-40 to 125	LP3965ES -ADJ	Samples
LP3965ESX-1.8/NOPB	ACTIVE	DDPAK/ TO-263	KTT	5	500	Pb-Free (RoHS Exempt)	CU SN	Level-3-245C-168 HR	-40 to 125	LP3965ES -1.8	Samples
LP3965ESX-2.5/NOPB	ACTIVE	DDPAK/ TO-263	KTT	5	500	Pb-Free (RoHS Exempt)	CU SN	Level-3-245C-168 HR	-40 to 125	LP3965ES -2.5	Samples

Orderable Device	Status (1)	Package Type	Package Drawing	Pins	Package Qty	Eco Plan (2)	Lead/Ball Finish (6)	MSL Peak Temp (3)	Op Temp (°C)	Device Marking (4/5)	Samples
LP3965ESX-3.3	NRND	DDPAK/ TO-263	KTT	5	500	TBD	Call TI	Call TI	-40 to 125	LP3965ES -3.3	
LP3965ESX-3.3/NOPB	ACTIVE	DDPAK/ TO-263	KTT	5	500	Pb-Free (RoHS Exempt)	CU SN	Level-3-245C-168 HR	-40 to 125	LP3965ES -3.3	Samples
LP3965ESX-ADJ/NOPB	ACTIVE	DDPAK/ TO-263	KTT	5	500	Pb-Free (RoHS Exempt)	CU SN	Level-3-245C-168 HR	-40 to 125	LP3965ES -ADJ	Samples
LP3965ET-1.8/NOPB	ACTIVE	TO-220	NDH	5	45	Green (RoHS & no Sb/Br)	CU SN	Level-1-NA-UNLIM	-40 to 125	LP3965ET -1.8	Samples
LP3965ET-3.3/LB04	NRND	TO-220	NEB	5	45	TBD	Call TI	Call TI		LP3965ET -3.3	
LP3965ET-3.3/NOPB	ACTIVE	TO-220	NDH	5	45	Green (RoHS & no Sb/Br)	CU SN	Level-1-NA-UNLIM	-40 to 125	LP3965ET -3.3	Samples
LP3965ET-ADJ	NRND	TO-220	NDH	5	45	TBD	Call TI	Call TI	-40 to 125	LP3965ET -ADJ	
LP3965ET-ADJ/NOPB	ACTIVE	TO-220	NDH	5	45	Green (RoHS & no Sb/Br)	CU SN	Level-1-NA-UNLIM	-40 to 125	LP3965ET -ADJ	Samples

(1) The marketing status values are defined as follows:
ACTIVE: Product device recommended for new designs.
LIFEBUY: TI has announced that the device will be discontinued, and a lifetime-buy period is in effect.
NRND: Not recommended for new designs. Device is in production to support existing customers, but TI does not recommend using this part in a new design.
PREVIEW: Device has been announced but is not in production. Samples may or may not be available.
OBSOLETE: TI has discontinued the production of the device.

(2) Eco Plan - The planned eco-friendly classification: Pb-Free (RoHS), Pb-Free (RoHS Exempt), or Green (RoHS & no Sb/Br) - please check http://www.ti.com/productcontent for the latest availability information and additional product content details.
TBD: The Pb-Free/Green conversion plan has not been defined.
Pb-Free (RoHS): TI's terms "Lead-Free" or "Pb-Free" mean semiconductor products that are compatible with the current RoHS requirements for all 6 substances, including the requirement that lead not exceed 0.1% by weight in homogeneous materials. Where designed to be soldered at high temperatures, TI Pb-Free products are suitable for use in specified lead-free processes.
Pb-Free (RoHS Exempt): This component has a RoHS exemption for either 1) lead-based flip-chip solder bumps used between the die and package, or 2) lead-based die adhesive used between the die and leadframe. The component is otherwise considered Pb-Free (RoHS compatible) as defined above.
Green (RoHS & no Sb/Br): TI defines "Green" to mean Pb-Free (RoHS compatible), and free of Bromine (Br) and Antimony (Sb) based flame retardants (Br or Sb do not exceed 0.1% by weight in homogeneous material)

(3) MSL, Peak Temp. - The Moisture Sensitivity Level rating according to the JEDEC industry standard classifications, and peak solder temperature.

(4) There may be additional marking, which relates to the logo, the lot trace code information, or the environmental category on the device.

(5) Multiple Device Markings will be inside parentheses. Only one Device Marking contained in parentheses and separated by a "~" will appear on a device. If a line is indented then it is a continuation of the previous line and the two combined represent the entire Device Marking for that device.

(6) Lead/Ball Finish - Orderable Devices may have multiple material finish options. Finish options are separated by a vertical ruled line. Lead/Ball Finish values may wrap to two lines if the finish value exceeds the maximum column width.

Important Information and Disclaimer: The information provided on this page represents TI's knowledge and belief as of the date that it is provided. TI bases its knowledge and belief on information provided by third parties, and makes no representation or warranty as to the accuracy of such information. Efforts are underway to better integrate information from third parties. TI has taken and continues to take reasonable steps to provide representative and accurate information but may not have conducted destructive testing or chemical analysis on incoming materials and chemicals. TI and TI suppliers consider certain information to be proprietary, and thus CAS numbers and other limited information may not be available for release.

In no event shall TI's liability arising out of such information exceed the total purchase price of the TI part(s) at issue in this document sold by TI to Customer on an annual basis.

TAPE AND REEL INFORMATION

REEL DIMENSIONS

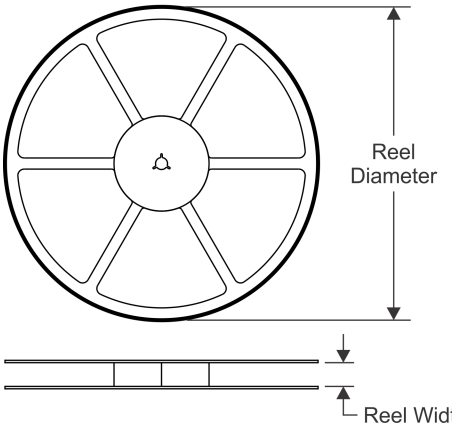

TAPE DIMENSIONS

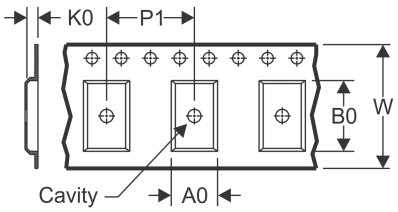

A0	Dimension designed to accommodate the component width
B0	Dimension designed to accommodate the component length
K0	Dimension designed to accommodate the component thickness
W	Overall width of the carrier tape
P1	Pitch between successive cavity centers

QUADRANT ASSIGNMENTS FOR PIN 1 ORIENTATION IN TAPE

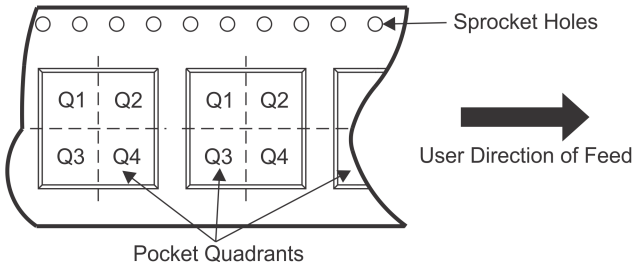

*All dimensions are nominal

Device	Package Type	Package Drawing	Pins	SPQ	Reel Diameter (mm)	Reel Width W1 (mm)	A0 (mm)	B0 (mm)	K0 (mm)	P1 (mm)	W (mm)	Pin1 Quadrant
LP3962EMP-1.8	SOT-223	NDC	5	1000	330.0	16.4	7.0	7.5	2.2	12.0	16.0	Q3
LP3962EMP-1.8/NOPB	SOT-223	NDC	5	1000	330.0	16.4	7.0	7.5	2.2	12.0	16.0	Q3
LP3962EMP-2.5	SOT-223	NDC	5	1000	330.0	16.4	7.0	7.5	2.2	12.0	16.0	Q3
LP3962EMP-2.5/NOPB	SOT-223	NDC	5	1000	330.0	16.4	7.0	7.5	2.2	12.0	16.0	Q3
LP3962EMP-3.3	SOT-223	NDC	5	1000	330.0	16.4	7.0	7.5	2.2	12.0	16.0	Q3
LP3962EMP-3.3/NOPB	SOT-223	NDC	5	1000	330.0	16.4	7.0	7.5	2.2	12.0	16.0	Q3
LP3962EMPX-2.5/NOPB	SOT-223	NDC	5	2000	330.0	16.4	7.0	7.5	2.2	12.0	16.0	Q3
LP3962ESX-1.8/NOPB	DDPAK/ TO-263	KTT	5	500	330.0	24.4	10.75	14.85	5.0	16.0	24.0	Q2
LP3962ESX-2.5/NOPB	DDPAK/ TO-263	KTT	5	500	330.0	24.4	10.75	14.85	5.0	16.0	24.0	Q2
LP3962ESX-3.3	DDPAK/ TO-263	KTT	5	500	330.0	24.4	10.75	14.85	5.0	16.0	24.0	Q2
LP3962ESX-3.3/NOPB	DDPAK/ TO-263	KTT	5	500	330.0	24.4	10.75	14.85	5.0	16.0	24.0	Q2
LP3962ESX-5.0/NOPB	DDPAK/ TO-263	KTT	5	500	330.0	24.4	10.75	14.85	5.0	16.0	24.0	Q2
LP3965EMP-1.8/NOPB	SOT-223	NDC	5	1000	330.0	16.4	7.0	7.5	2.2	12.0	16.0	Q3
LP3965EMP-2.5	SOT-223	NDC	5	1000	330.0	16.4	7.0	7.5	2.2	12.0	16.0	Q3

Device	Package Type	Package Drawing	Pins	SPQ	Reel Diameter (mm)	Reel Width W1 (mm)	A0 (mm)	B0 (mm)	K0 (mm)	P1 (mm)	W (mm)	Pin1 Quadrant
LP3965EMP-2.5/NOPB	SOT-223	NDC	5	1000	330.0	16.4	7.0	7.5	2.2	12.0	16.0	Q3
LP3965EMP-3.3	SOT-223	NDC	5	1000	330.0	16.4	7.0	7.5	2.2	12.0	16.0	Q3
LP3965EMP-3.3/NOPB	SOT-223	NDC	5	1000	330.0	16.4	7.0	7.5	2.2	12.0	16.0	Q3
LP3965EMP-ADJ	SOT-223	NDC	5	1000	330.0	16.4	7.0	7.5	2.2	12.0	16.0	Q3
LP3965EMP-ADJ/NOPB	SOT-223	NDC	5	1000	330.0	16.4	7.0	7.5	2.2	12.0	16.0	Q3
LP3965EMPX-ADJ/NOPB	SOT-223	NDC	5	2000	330.0	16.4	7.0	7.5	2.2	12.0	16.0	Q3
LP3965ESX-1.8/NOPB	DDPAK/ TO-263	KTT	5	500	330.0	24.4	10.75	14.85	5.0	16.0	24.0	Q2
LP3965ESX-2.5/NOPB	DDPAK/ TO-263	KTT	5	500	330.0	24.4	10.75	14.85	5.0	16.0	24.0	Q2
LP3965ESX-3.3	DDPAK/ TO-263	KTT	5	500	330.0	24.4	10.75	14.85	5.0	16.0	24.0	Q2
LP3965ESX-3.3/NOPB	DDPAK/ TO-263	KTT	5	500	330.0	24.4	10.75	14.85	5.0	16.0	24.0	Q2
LP3965ESX-ADJ/NOPB	DDPAK/ TO-263	KTT	5	500	330.0	24.4	10.75	14.85	5.0	16.0	24.0	Q2

TAPE AND REEL BOX DIMENSIONS

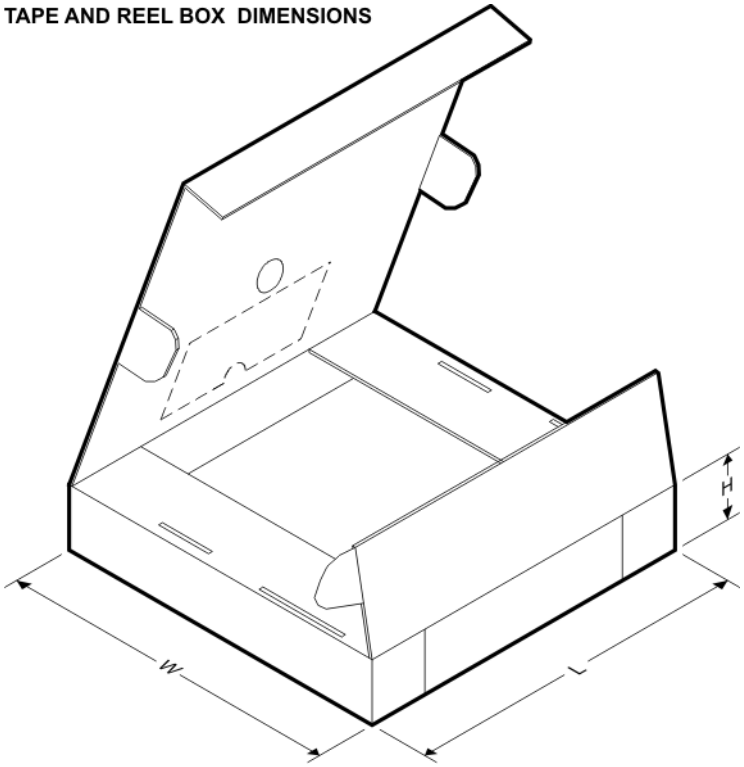

*All dimensions are nominal

Device	Package Type	Package Drawing	Pins	SPQ	Length (mm)	Width (mm)	Height (mm)
LP3962EMP-1.8	SOT-223	NDC	5	1000	367.0	367.0	35.0
LP3962EMP-1.8/NOPB	SOT-223	NDC	5	1000	367.0	367.0	35.0

Device	Package Type	Package Drawing	Pins	SPQ	Length (mm)	Width (mm)	Height (mm)
LP3962EMP-2.5	SOT-223	NDC	5	1000	367.0	367.0	35.0
LP3962EMP-2.5/NOPB	SOT-223	NDC	5	1000	367.0	367.0	35.0
LP3962EMP-3.3	SOT-223	NDC	5	1000	367.0	367.0	35.0
LP3962EMP-3.3/NOPB	SOT-223	NDC	5	1000	367.0	367.0	35.0
LP3962EMPX-2.5/NOPB	SOT-223	NDC	5	2000	367.0	367.0	35.0
LP3962ESX-1.8/NOPB	DDPAK/TO-263	KTT	5	500	367.0	367.0	45.0
LP3962ESX-2.5/NOPB	DDPAK/TO-263	KTT	5	500	367.0	367.0	45.0
LP3962ESX-3.3	DDPAK/TO-263	KTT	5	500	367.0	367.0	45.0
LP3962ESX-3.3/NOPB	DDPAK/TO-263	KTT	5	500	367.0	367.0	45.0
LP3962ESX-5.0/NOPB	DDPAK/TO-263	KTT	5	500	367.0	367.0	45.0
LP3965EMP-1.8/NOPB	SOT-223	NDC	5	1000	367.0	367.0	35.0
LP3965EMP-2.5	SOT-223	NDC	5	1000	367.0	367.0	35.0
LP3965EMP-2.5/NOPB	SOT-223	NDC	5	1000	367.0	367.0	35.0
LP3965EMP-3.3	SOT-223	NDC	5	1000	367.0	367.0	35.0
LP3965EMP-3.3/NOPB	SOT-223	NDC	5	1000	367.0	367.0	35.0
LP3965EMP-ADJ	SOT-223	NDC	5	1000	367.0	367.0	35.0
LP3965EMP-ADJ/NOPB	SOT-223	NDC	5	1000	367.0	367.0	35.0
LP3965EMPX-ADJ/NOPB	SOT-223	NDC	5	2000	367.0	367.0	35.0
LP3965ESX-1.8/NOPB	DDPAK/TO-263	KTT	5	500	367.0	367.0	45.0
LP3965ESX-2.5/NOPB	DDPAK/TO-263	KTT	5	500	367.0	367.0	45.0
LP3965ESX-3.3	DDPAK/TO-263	KTT	5	500	367.0	367.0	45.0
LP3965ESX-3.3/NOPB	DDPAK/TO-263	KTT	5	500	367.0	367.0	45.0
LP3965ESX-ADJ/NOPB	DDPAK/TO-263	KTT	5	500	367.0	367.0	45.0

NDH0005D

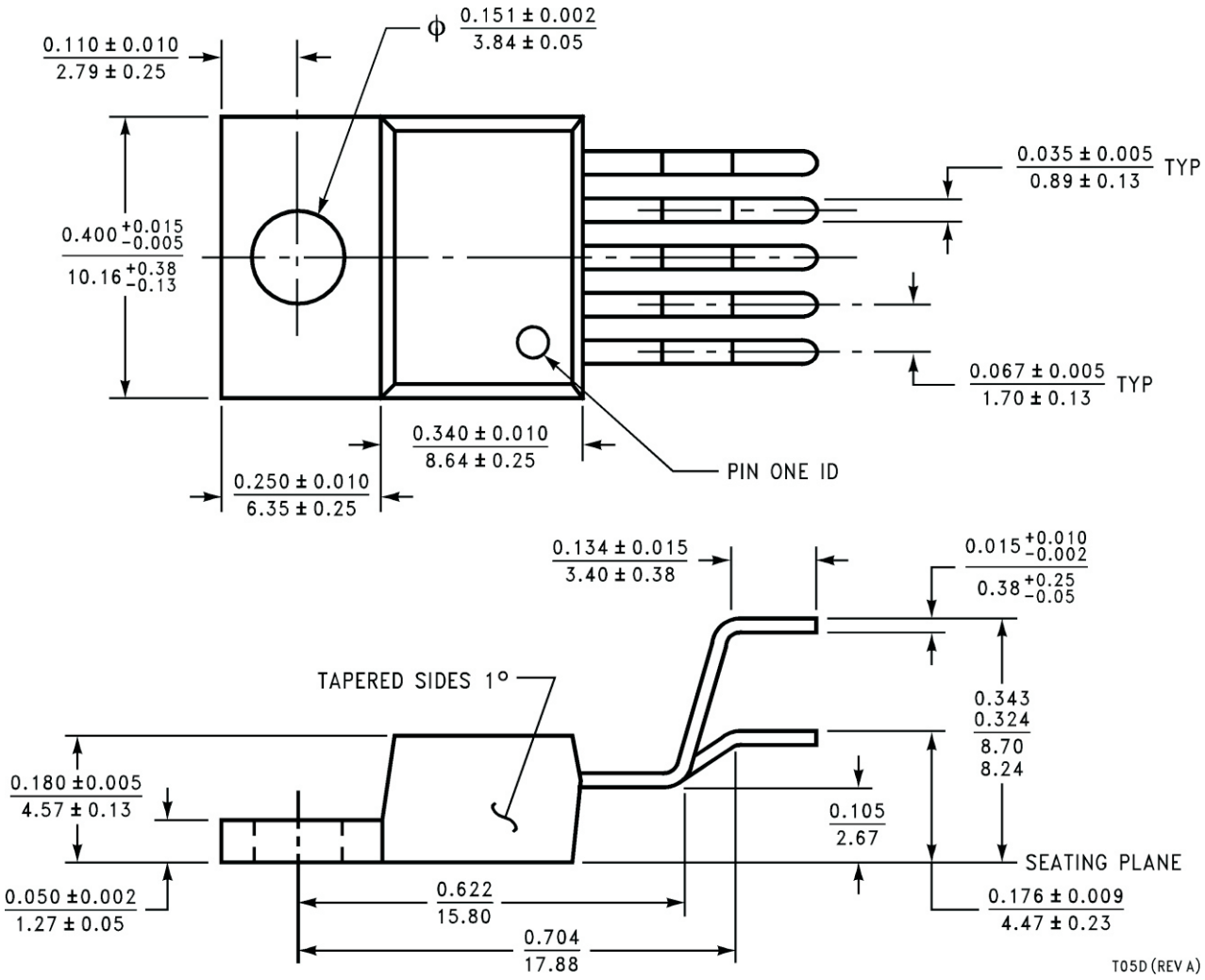
0.110 ± 0.010
2.79 ± 0.25
ϕ 0.151 ± 0.002
3.84 ± 0.05
0.035 ± 0.005
0.89 ± 0.13
TYP
0.400 +0.015 −0.005
10.16 +0.38 −0.13
0.067 ± 0.005
1.70 ± 0.13
TYP
0.340 ± 0.010
8.64 ± 0.25
PIN ONE ID
0.250 ± 0.010
6.35 ± 0.25
0.134 ± 0.015
3.40 ± 0.38
0.015 +0.010 −0.002
0.38 +0.25 −0.05
TAPERED SIDES 1°
0.343
0.324
8.70
8.24
0.180 ±0.005
4.57 ± 0.13
0.105
2.67
SEATING PLANE
0.050 ±0.002
1.27 ± 0.05
0.622
15.80
0.176 ± 0.009
4.47 ± 0.23
0.704
17.88
T05D (REV A)

NDC0005A

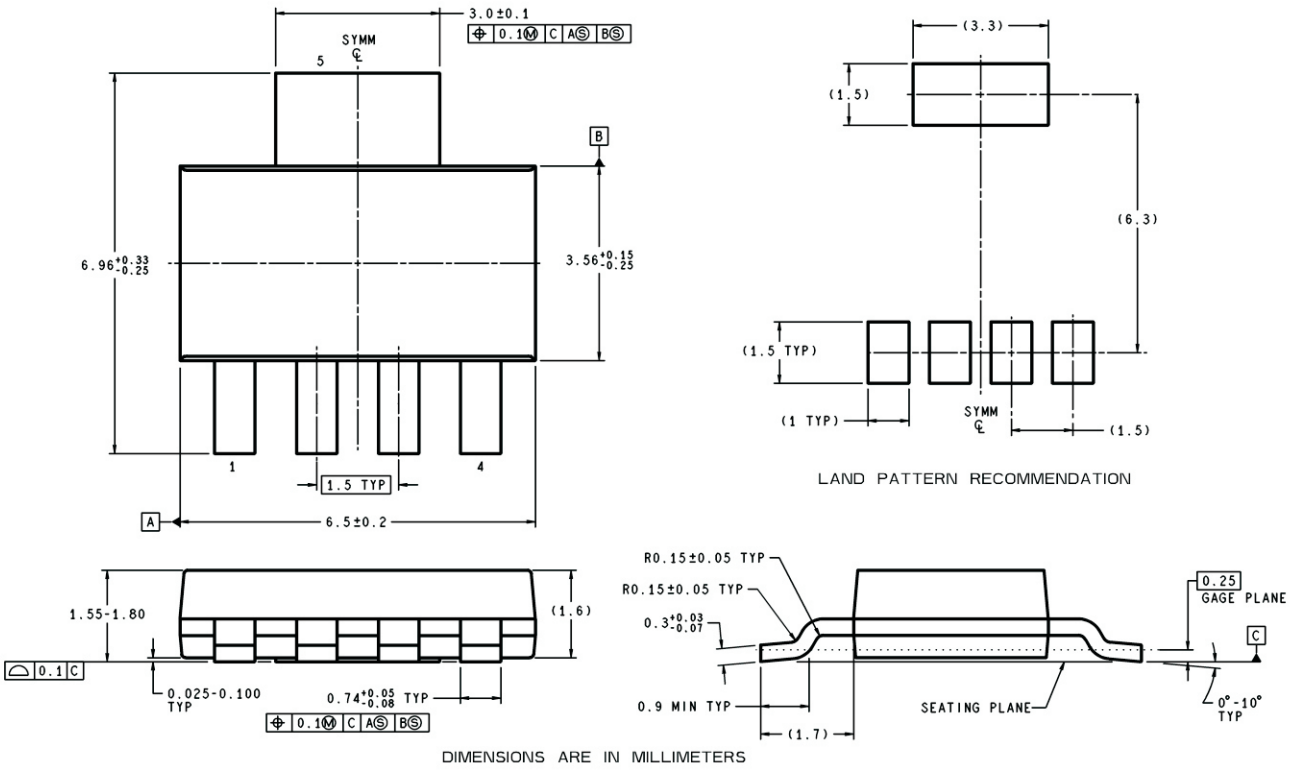

MP05A (Rev A)

KTT0005B

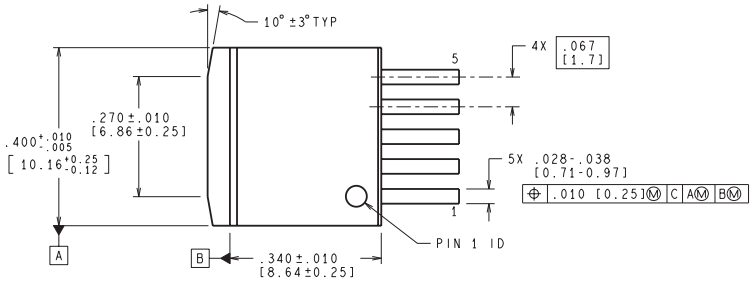

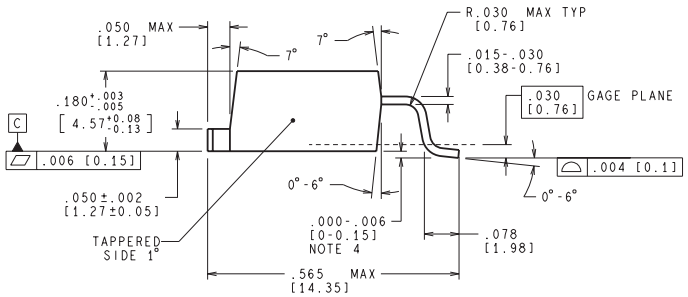

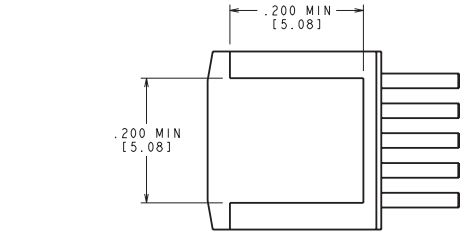

BOTTOM SIDE OF PACKAGE

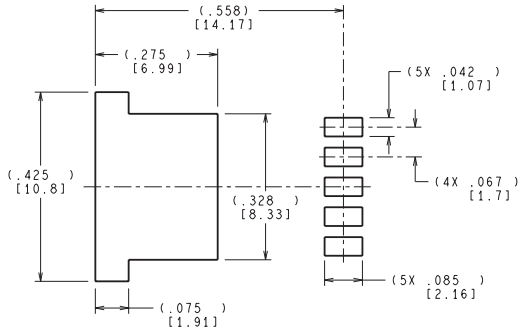

LAND PATTERN RECOMMENDATION

CONTROLLING DIMENSION IS INCH
VALUES IN [ ] ARE MILLIMETERS
DIMENSIONS IN ( ) FOR REFERENCE ONLY

TS5B (Rev D)

NEB0005B

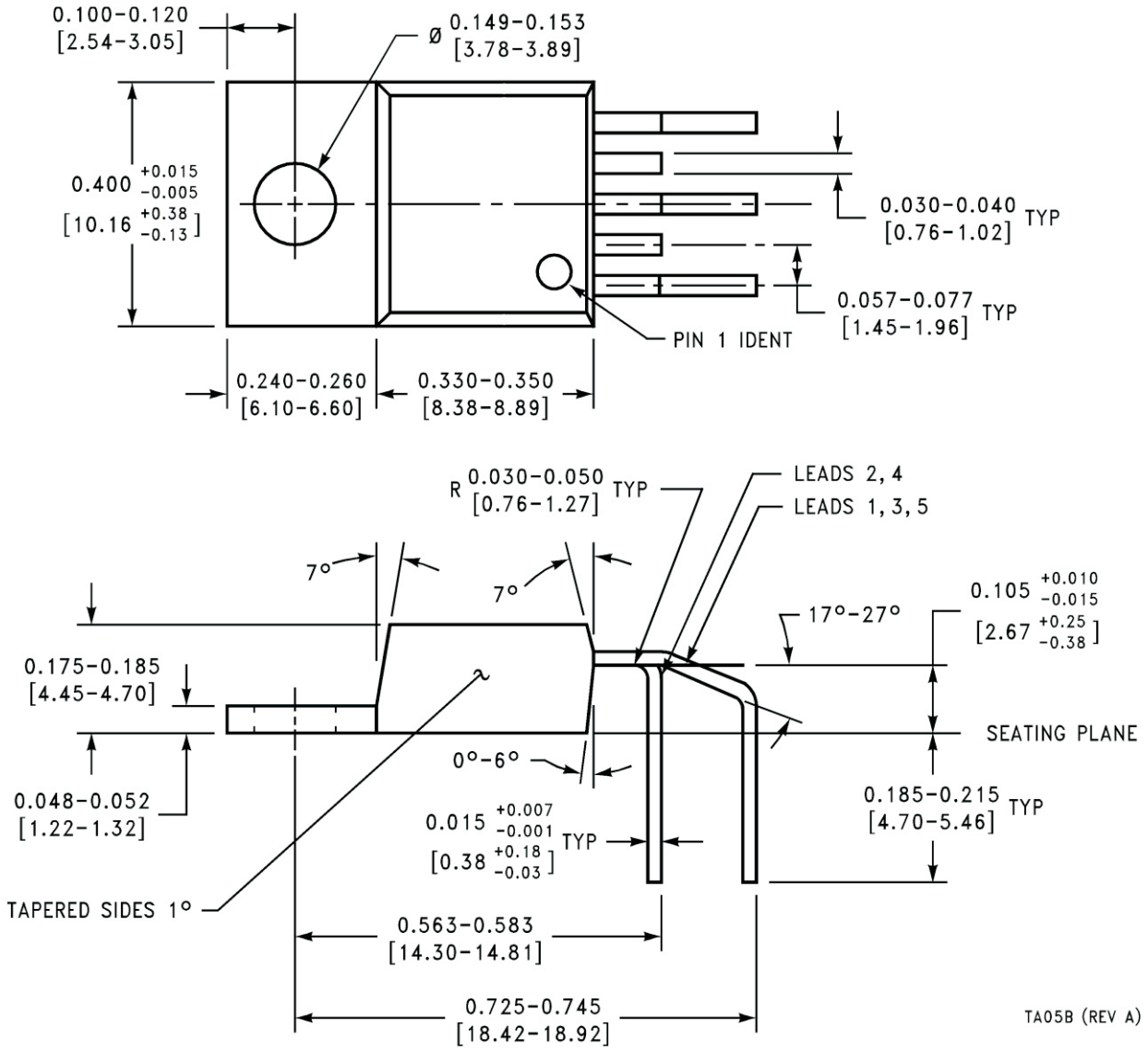
0.100–0.120
[2.54–3.05]
Ø 0.149–0.153
[3.78–3.89]
0.400 +0.015 −0.005
[10.16 +0.38 −0.13]
0.030–0.040 TYP
[0.76–1.02]
0.057–0.077 TYP
[1.45–1.96]
PIN 1 IDENT
0.240–0.260
[6.10–6.60]
0.330–0.350
[8.38–8.89]
R 0.030–0.050 TYP
[0.76–1.27]
LEADS 2, 4
LEADS 1, 3, 5
7°
7°
17°–27°
0.105 +0.010 −0.015
[2.67 +0.25 −0.38]
0.175–0.185
[4.45–4.70]
SEATING PLANE
0°–6°
0.048–0.052
[1.22–1.32]
0.185–0.215 TYP
[4.70–5.46]
0.015 +0.007 −0.001 TYP
[0.38 +0.18 −0.03]
TAPERED SIDES 1°
0.563–0.583
[14.30–14.81]
0.725–0.745
[18.42–18.92]
TA05B (REV A)

NEB0005F

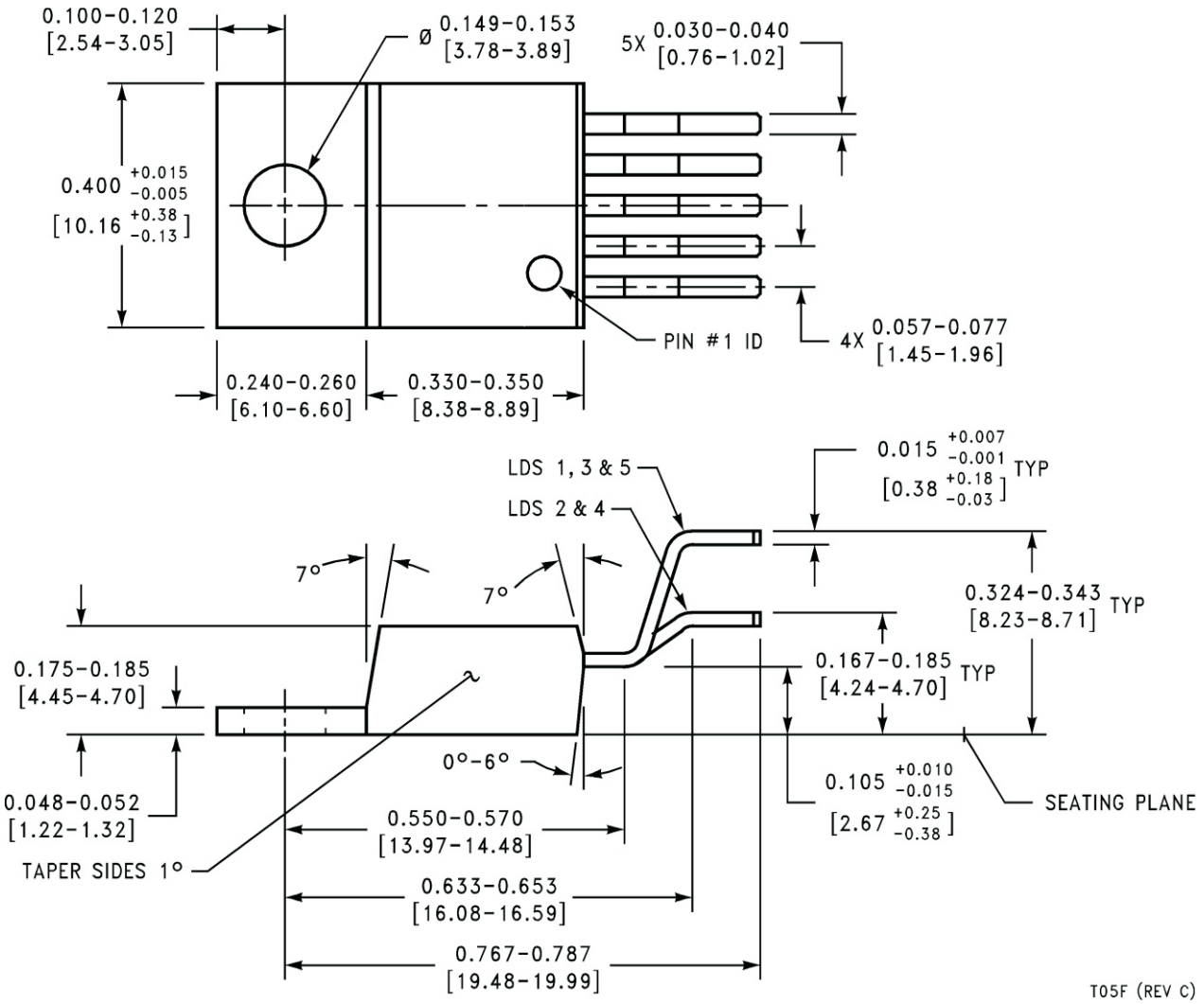
0.100-0.120
[2.54-3.05]
Ø 0.149-0.153
[3.78-3.89]
5X 0.030-0.040
[0.76-1.02]
0.400 +0.015 -0.005
[10.16 +0.38 -0.13]
PIN #1 ID
4X 0.057-0.077
[1.45-1.96]
0.240-0.260
[6.10-6.60]
0.330-0.350
[8.38-8.89]
LDS 1, 3 & 5
LDS 2 & 4
0.015 +0.007 -0.001 TYP
[0.38 +0.18 -0.03]
7°
7°
0.324-0.343 TYP
[8.23-8.71]
0.175-0.185
[4.45-4.70]
0.167-0.185 TYP
[4.24-4.70]
0°-6°
0.105 +0.010 -0.015
[2.67 +0.25 -0.38]
SEATING PLANE
0.048-0.052
[1.22-1.32]
0.550-0.570
[13.97-14.48]
TAPER SIDES 1°
0.633-0.653
[16.08-16.59]
0.767-0.787
[19.48-19.99]
T05F (REV C)

IMPORTANT NOTICE

Texas Instruments Incorporated and its subsidiaries (TI) reserve the right to make corrections, enhancements, improvements and other changes to its semiconductor products and services per JESD46, latest issue, and to discontinue any product or service per JESD48, latest issue. Buyers should obtain the latest relevant information before placing orders and should verify that such information is current and complete. All semiconductor products (also referred to herein as “components”) are sold subject to TI’s terms and conditions of sale supplied at the time of order acknowledgment.

TI warrants performance of its components to the specifications applicable at the time of sale, in accordance with the warranty in TI’s terms and conditions of sale of semiconductor products. Testing and other quality control techniques are used to the extent TI deems necessary to support this warranty. Except where mandated by applicable law, testing of all parameters of each component is not necessarily performed.

TI assumes no liability for applications assistance or the design of Buyers’ products. Buyers are responsible for their products and applications using TI components. To minimize the risks associated with Buyers’ products and applications, Buyers should provide adequate design and operating safeguards.

TI does not warrant or represent that any license, either express or implied, is granted under any patent right, copyright, mask work right, or other intellectual property right relating to any combination, machine, or process in which TI components or services are used. Information published by TI regarding third-party products or services does not constitute a license to use such products or services or a warranty or endorsement thereof. Use of such information may require a license from a third party under the patents or other intellectual property of the third party, or a license from TI under the patents or other intellectual property of TI.

Reproduction of significant portions of TI information in TI data books or data sheets is permissible only if reproduction is without alteration and is accompanied by all associated warranties, conditions, limitations, and notices. TI is not responsible or liable for such altered documentation. Information of third parties may be subject to additional restrictions.

Resale of TI components or services with statements different from or beyond the parameters stated by TI for that component or service voids all express and any implied warranties for the associated TI component or service and is an unfair and deceptive business practice. TI is not responsible or liable for any such statements.

Buyer acknowledges and agrees that it is solely responsible for compliance with all legal, regulatory and safety-related requirements concerning its products, and any use of TI components in its applications, notwithstanding any applications-related information or support that may be provided by TI. Buyer represents and agrees that it has all the necessary expertise to create and implement safeguards which anticipate dangerous consequences of failures, monitor failures and their consequences, lessen the likelihood of failures that might cause harm and take appropriate remedial actions. Buyer will fully indemnify TI and its representatives against any damages arising out of the use of any TI components in safety-critical applications.

In some cases, TI components may be promoted specifically to facilitate safety-related applications. With such components, TI’s goal is to help enable customers to design and create their own end-product solutions that meet applicable functional safety standards and requirements. Nonetheless, such components are subject to these terms.

No TI components are authorized for use in FDA Class III (or similar life-critical medical equipment) unless authorized officers of the parties have executed a special agreement specifically governing such use.

Only those TI components which TI has specifically designated as military grade or “enhanced plastic” are designed and intended for use in military/aerospace applications or environments. Buyer acknowledges and agrees that any military or aerospace use of TI components which have ***not*** been so designated is solely at the Buyer's risk, and that Buyer is solely responsible for compliance with all legal and regulatory requirements in connection with such use.

TI has specifically designated certain components as meeting ISO/TS16949 requirements, mainly for automotive use. In any case of use of non-designated products, TI will not be responsible for any failure to meet ISO/TS16949.

Products		**Applications**	
Audio	www.ti.com/audio	Automotive and Transportation	www.ti.com/automotive
Amplifiers	amplifier.ti.com	Communications and Telecom	www.ti.com/communications
Data Converters	dataconverter.ti.com	Computers and Peripherals	www.ti.com/computers
DLP® Products	www.dlp.com	Consumer Electronics	www.ti.com/consumer-apps
DSP	dsp.ti.com	Energy and Lighting	www.ti.com/energy
Clocks and Timers	www.ti.com/clocks	Industrial	www.ti.com/industrial
Interface	interface.ti.com	Medical	www.ti.com/medical
Logic	logic.ti.com	Security	www.ti.com/security
Power Mgmt	power.ti.com	Space, Avionics and Defense	www.ti.com/space-avionics-defense
Microcontrollers	microcontroller.ti.com	Video and Imaging	www.ti.com/video
RFID	www.ti-rfid.com		
OMAP Applications Processors	www.ti.com/omap	**TI E2E Community**	e2e.ti.com
Wireless Connectivity	www.ti.com/wirelessconnectivity		

Mailing Address: Texas Instruments, Post Office Box 655303, Dallas, Texas 75265
Copyright © 2015, Texas Instruments Incorporated