LP2985
150-mA LOW-NOISE LOW-DROPOUT REGULATOR WITH SHUTDOWN

SLVS522J – JULY 2004 – REVISED AUGUST 2006

FEATURES

- **Output Tolerance of**
  - **– 1% (A Grade)**
  - **– 1.5% (Standard Grade)**
- **Ultra-Low Dropout, Typically**
  - **– 280 mV at Full Load of 150 mA**
  - **– 7 mV at 1 mA**
- **Wide V_{IN} Range…16 V Max**
- **Low I_Q . . . 850 μA at Full Load at 150 mA**
- **Shutdown Current . . . 0.01 μA Typ**
- **Low Noise . . . 30 μV_{RMS} With 10-nF Bypass Capacitor**
- **Stable With Low-ESR Capacitors, Including Ceramic**
- **Overcurrent and Thermal Protection**
- **High Peak-Current Capability**

PORTABLE APPLICATIONS

- **Cellular Phones**
- **Palmtop and Laptop Computers**
- **Personal Digital Assistants (PDAs)**
- **Digital Cameras and Camcorders**
- **CD Players**
- **MP3 Players**

DBV (SOT-23) PACKAGE
(TOP VIEW)

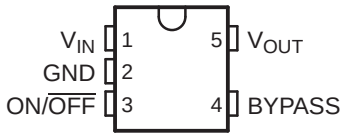

DESCRIPTION/ORDERING INFORMATION

The LP2985 family of fixed-output, low-dropout regulators offers exceptional, cost-effective performance for both portable and nonportable applications. Available in voltages of 1.8 V, 2.5 V, 2.8 V, 2.9 V, 3 V, 3.3 V and 5 V, the family has an output tolerance of 1% for the A version (1.5% for the non-A version) and is capable of delivering 150-mA continuous load current. Standard regulator features, such as overcurrent and overtemperature protection, are included.

The LP2985 has a host of features that makes the regulator an ideal candidate for a variety of portable applications:

- Low dropout: A PNP pass element allows a typical dropout of 280 mV at 150-mA load current and 7 mV at 1-mA load.
- Low quiescent current: The use of a vertical PNP process allows for quiescent currents that are considerably lower than those associated with traditional lateral PNP regulators.
- Shutdown: A shutdown feature is available, allowing the regulator to consume only 0.01 μA when the ON/$\overline{\text{OFF}}$ pin is pulled low.
- Low-ESR-capacitor friendly: The regulator is stable with low-ESR capacitors, allowing the use of small, inexpensive, ceramic capacitors in cost-sensitive applications.
- Low noise: A BYPASS pin allows for low-noise operation, with a typical output noise of 30 μV_{RMS}, with the use of a 10-nF bypass capacitor.
- Small packaging: For the most space-constrained needs, the regulator is available in the SOT-23 package.

Please be aware that an important notice concerning availability, standard warranty, and use in critical applications of Texas Instruments semiconductor products and disclaimers thereto appears at the end of this data sheet.

PRODUCTION DATA information is current as of publication date. Products conform to specifications per the terms of the Texas Instruments standard warranty. Production processing does not necessarily include testing of all parameters.

Copyright © 2004–2006, Texas Instruments Incorporated

ORDERING INFORMATION

T_J	PART GRADE	V_{OUT} (NOM)	PACKAGE(1)		ORDERABLE PART NUMBER	TOP-SIDE MARKING(2)
–40°C to 125°C	A grade: 1% tolerance	1.8 V	SOT-23-5 – DBV	Reel of 3000	LP2985A-18DBVR	LPT_
				Reel of 250	LP2985A-18DBVT	
		2.5 V		Reel of 3000	LP2985A-25DBVR	LPU_
				Reel of 250	LP2985A-25DBVT	
		2.8 V		Reel of 3000	LP2985A-28DBVR	LPJ_
				Reel of 250	LP2985A-28DBVT	
		2.9 V		Reel of 3000	LP2985A-29DBVR	LPZ_
				Reel of 250	LP2985A-29DBVT	
		3.0 V		Reel of 3000	LP2985A-30DBVR	LRA_
				Reel of 250	LP2985A-30DBVT	
		3.3 V		Reel of 3000	LP2985A-33DBVR	LPK_
				Reel of 250	LP2985A-33DBVT	
		5.0 V		Reel of 3000	LP2985A-50DBVR	LRI_
				Reel of 250	LP2985A-50DBVT	
	Standard grade: 1.5% tolerance	1.8 V		Reel of 3000	LP2985-18DBVR	LPH_
				Reel of 250	LP2985-18DBVT	
		2.5 V		Reel of 3000	LP2985-25DBVR	LPL_
				Reel of 250	LP2985-25DBVT	
		2.8 V		Reel of 3000	LP2985-28DBVR	LPG_
				Reel of 250	LP2985-28DBVT	
		2.9 V		Reel of 3000	LP2985-29DBVR	LPM_
				Reel of 250	LP2985-29DBVT	
		3.0 V		Reel of 3000	LP2985-30DBVR	LPN_
				Reel of 250	LP2985-30DBVT	
		3.3 V		Reel of 3000	LP2985-33DBVR	LPF_
				Reel of 250	LP2985-33DBVT	
		5.0 V		Reel of 3000	LP2985-50DBVR	LPS_
				Reel of 250	LP2985-50DBVT	

(1) Package drawings, standard packing quantities, thermal data, symbolization, and PCB design guidelines are available at www.ti.com/sc/package.
(2) The actual top-side marking has one additional character that designates the assembly/test site.

FUNCTIONAL BLOCK DIAGRAM

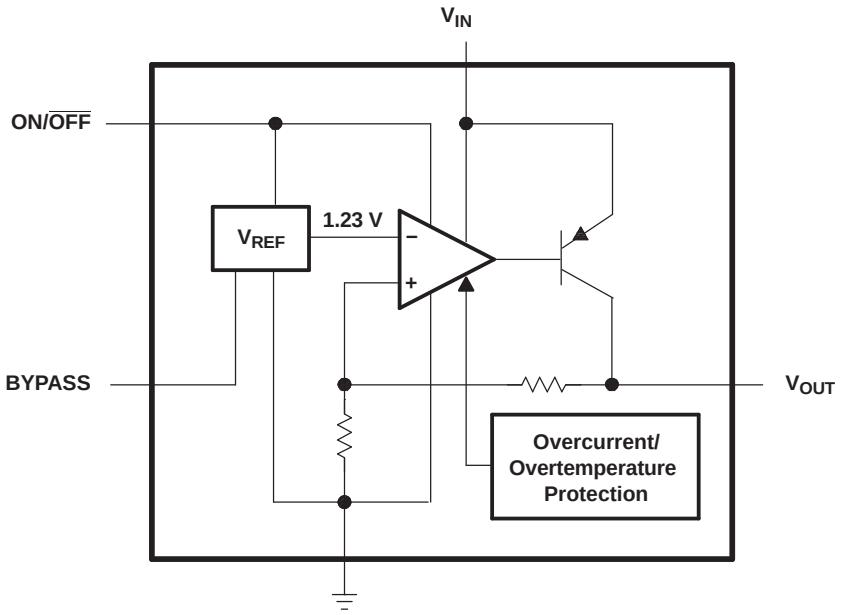

BASIC APPLICATION CIRCUIT

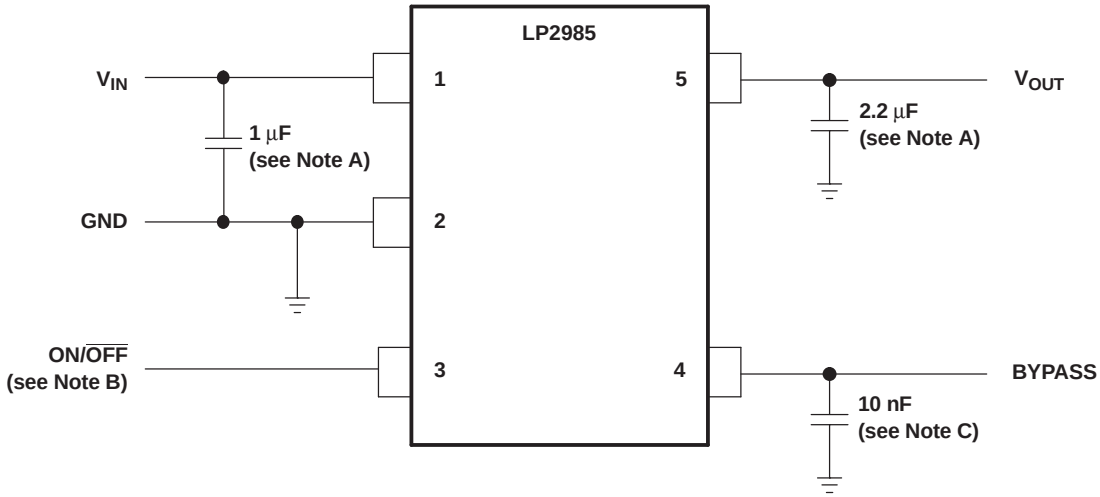

A. Minimum C_{OUT} value for stability (can be increased without limit for improved stability and transient response)

B. ON/$\overline{OFF}$ must be actively terminated. Connect to V_{IN} if shutdown feature is not used.

C. Optional BYPASS capacitor for low-noise operation

Absolute Maximum Ratings(1)

over virtual junction temperature range (unless otherwise noted)

		MIN	MAX	UNIT
V_{IN}	Continuous input voltage range	–0.3	16	V
$V_{ON/\overline{OFF}}$	ON/$\overline{OFF}$ input voltage range	–0.3	16	V
	Output voltage range(2)	–0.3	9	V
$V_{IN} – V_{OUT}$	Input/output voltage differential range(3)	–0.3	16	V
I_O	Output current(4)	Internally limited (short-circuit protected)		
θ_{JA}	Package thermal impedance(4)(5)		206	°C/W
T_J	Operating virtual junction temperature		150	°C
T_{stg}	Storage temperature range	–65	150	°C

(1) Stresses beyond those listed under "absolute maximum ratings" may cause permanent damage to the device. These are stress ratings only, and functional operation of the device at these or any other conditions beyond those indicated under "recommended operating conditions" is not implied. Exposure to absolute-maximum-rated conditions for extended periods may affect device reliability.
(2) If load is returned to a negative power supply in a dual-supply system, the output must be diode clamped to GND.
(3) The PNP pass transistor has a parasitic diode connected between the input and output. This diode normally is reverse biased ($V_{IN} > V_{OUT}$), but will be forward biased if the output voltage exceeds the input voltage by a diode drop (see *Application Information* for more details).
(4) Maximum power dissipation is a function of $T_J(max)$, θ_{JA}, and T_A. The maximum allowable power dissipation at any allowable ambient temperature is $P_D = (T_J(max) – T_A)/\theta_{JA}$. Operating at the absolute maximum T_J of 150°C can affect reliability.
(5) The package thermal impedance is calculated in accordance with JESD 51-7.

Recommended Operating Conditions

		MIN	MAX	UNIT
V_{IN}	Supply input voltage	2.2(1)	16	V
$V_{ON/\overline{OFF}}$	ON/$\overline{OFF}$ input voltage	0	V_{IN}	V
I_{OUT}	Output current		150	mA
T_J	Virtual junction temperature	–40	125	°C

(1) Recommended minimum V_{IN} is the greater of 2.5 V or $V_{OUT(max)}$ + rated dropout voltage (max) for operating I_L.

Electrical Characteristics

at specified virtual junction temperature range, $V_{IN} = V_{OUT(NOM)} + 1$ V, $V_{ON/\overline{OFF}} = 2$ V, $C_{IN} = 1$ µF, $I_L = 1$ mA, $C_{OUT} = 4.7$ µF (unless otherwise noted)

PARAMETER		TEST CONDITIONS	T_J	LP2985A-xx			LP2985-xx			UNIT
				MIN	TYP	MAX	MIN	TYP	MAX	
ΔV_{OUT}	Output voltage tolerance	I_L = 1 mA	25°C	–1		1	–1.5		1.5	%V_{NOM}
		1 mA ≤ I_L ≤ 50 mA	25°C	–1.5		1.5	–2.5		2.5	
			–40°C to 125°C	–2.5		2.5	–3.5		3.5	
		1 mA ≤ I_L ≤ 150 mA	25°C	–2.5		2.5	–3		3	
			–40°C to 125°C	–3.5		3.5	–4		4	
	Line regulation	V_{IN} = [$V_{OUT(NOM)}$ + 1 V] to 16 V	25°C		0.007	0.014		0.007	0.014	%/V
			–40°C to 125°C			0.032			0.032	
$V_{IN} – V_{OUT}$	Dropout voltage(1)	I_L = 0	25°C		1	3		1	3	mV
			–40°C to 125°C			5			5	
		I_L = 1 mA	25°C		7	10		7	10	
			–40°C to 125°C			15			15	
		I_L = 10 mA	25°C		40	60		40	60	
			–40°C to 125°C			90			90	
		I_L = 50 mA	25°C		120	150		120	150	
			–40°C to 125°C			225			225	
		I_L = 150 mA	25°C		280	350		280	350	
			–40°C to 125°C			575			575	
I_{GND}	Ground pin current	I_L = 0	25°C		65	95		65	95	µA
			–40°C to 125°C			125			125	
		I_L = 1 mA	25°C		75	110		75	110	
			–40°C to 125°C			170			170	
		I_L = 10 mA	25°C		120	220		120	220	
			–40°C to 125°C			400			400	
		I_L = 50 mA	25°C		350	600		350	600	
			–40°C to 125°C			1000			1000	
		I_L = 150 mA	25°C		850	1500		850	1500	
			–40°C to 125°C			2500			2500	
		$V_{ON/\overline{OFF}}$ < 0.3 V (OFF)	25°C		0.01	0.8		0.01	0.8	
		$V_{ON/\overline{OFF}}$ < 0.15 V (OFF)	–40°C to 105°C		0.05	2		0.05	2	
			–40°C to 125°C			5			5	
$V_{ON/\overline{OFF}}$	ON/$\overline{OFF}$ input voltage(2)	$V_{ON/\overline{OFF}}$ = HIGH → O/P ON	25°C		1.4			1.4		V
			–40°C to 125°C	1.6			1.6			
		$V_{ON/\overline{OFF}}$ = LOW → O/P OFF	25°C		0.55			0.55		
			–40°C to 125°C			0.15			0.15	
$I_{ON/\overline{OFF}}$	ON/$\overline{OFF}$ input current	$V_{ON/\overline{OFF}}$ = 0	25°C		0.01			0.01		µA
			–40°C to 125°C			–2			–2	
		$V_{ON/\overline{OFF}}$ = 5 V	25°C		5			5		
			–40°C to 125°C			15			15	
V_n	Output noise (RMS)	BW = 300 Hz to 50 kHz, C_{OUT} = 10 µF, C_{BYPASS} = 10 nF	25°C		30			30		µV
$\Delta V_{OUT}/\Delta V_{IN}$	Ripple rejection	f = 1kHz, C_{OUT} = 10 µF, C_{BYPASS} = 10 nF	25°C		45			45		dB

(1) Dropout voltage is defined as the input-to-output differential at which the output voltage drops 100 mV below the value measured with a 1-V differential.
(2) The ON/$\overline{OFF}$ input must be driven properly for reliable operation (see *Application Information*).

Electrical Characteristics (continued)

at specified virtual junction temperature range, $V_{IN} = V_{OUT(NOM)} + 1$ V, $V_{ON/\overline{OFF}} = 2$ V, $C_{IN} = 1$ µF, $I_L = 1$ mA, $C_{OUT} = 4.7$ µF (unless otherwise noted)

PARAMETER		TEST CONDITIONS	T_J	LP2985A-xx			LP2985-xx			UNIT
				MIN	TYP	MAX	MIN	TYP	MAX	
$I_{OUT(PK)}$	Peak output current	$V_{OUT} \geq V_{O(NOM)} - 5\%$	25°C		350			350		mA
$I_{OUT(SC)}$	Short-circuit current	$R_L = 0$ (steady state)(3)	25°C		400			400		mA

(3) See Figure 5 in *Typical Performance Characteristics*.

TYPICAL PERFORMANCE CHARACTERISTICS

C_{IN} = 1 µF, C_{OUT} = 4.7 µF, V_{IN} = $V_{OUT(NOM)}$ + 1 V, T_A = 25°C, ON/$\overline{OFF}$ pin tied to V_{IN} (unless otherwise specified)

OUTPUT VOLTAGE vs TEMPERATURE

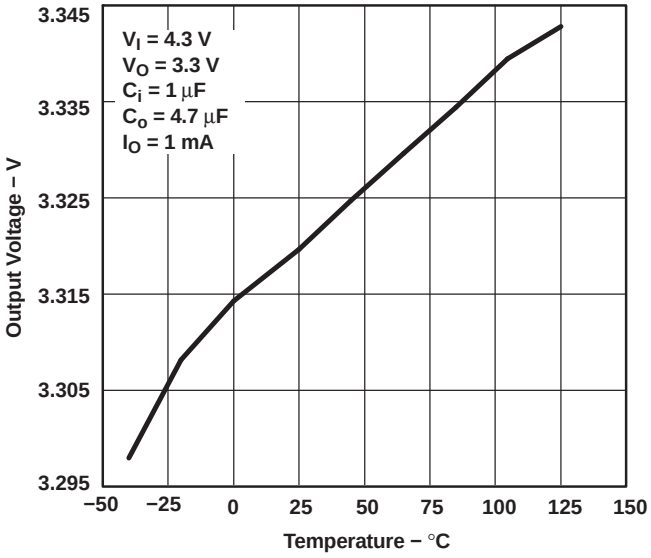

Figure 1.

DROPOUT VOLTAGE vs TEMPERATURE

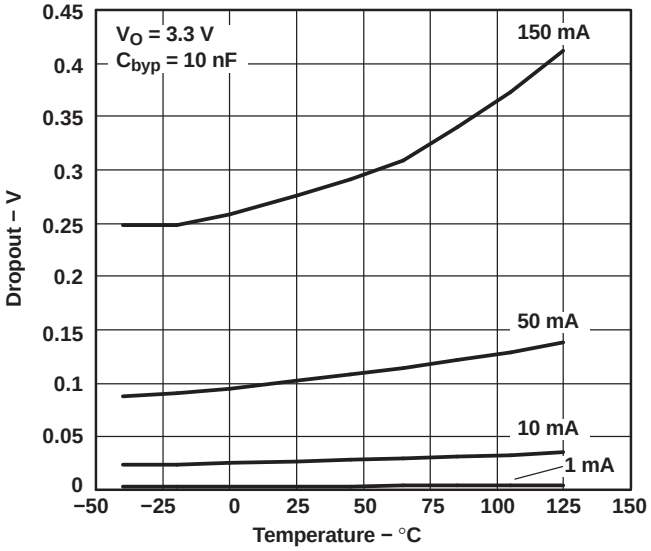

Figure 2.

SHORT-CIRCUIT CURRENT vs TIME

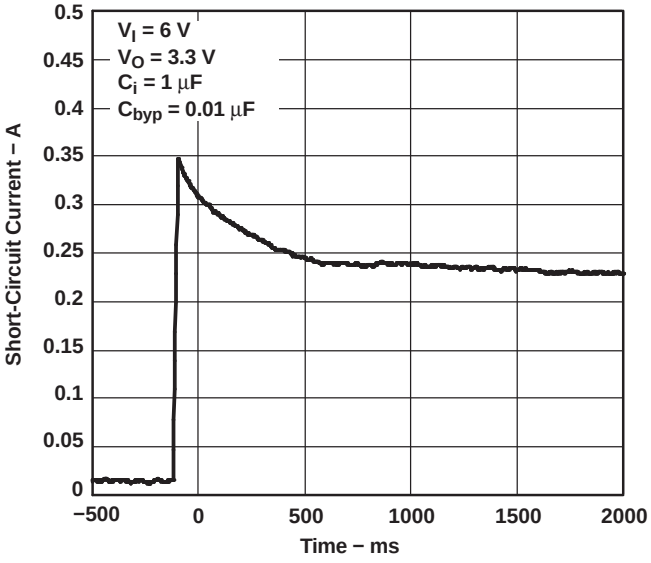

Figure 3.

SHORT-CIRCUIT CURRENT vs TIME

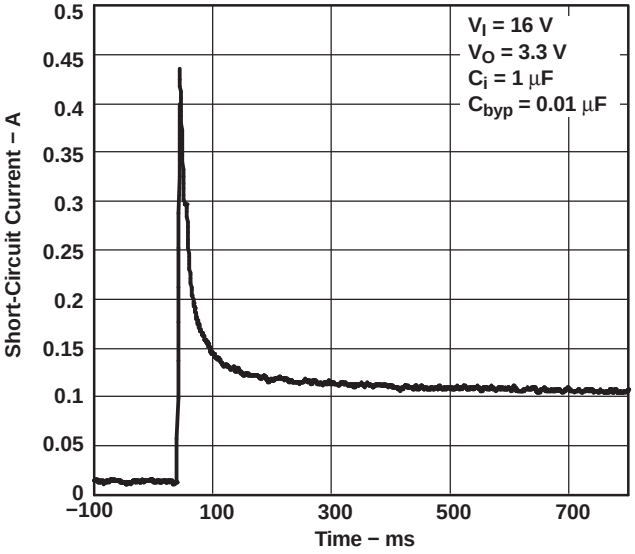

Figure 4.

TYPICAL PERFORMANCE CHARACTERISTICS (continued)

C_{IN} = 1 µF, C_{OUT} = 4.7 µF, V_{IN} = $V_{OUT(NOM)}$ + 1 V, T_A = 25°C, ON/$\overline{OFF}$ pin tied to V_{IN} (unless otherwise specified)

SHORT-CIRCUIT CURRENT vs OUTPUT VOLTAGE

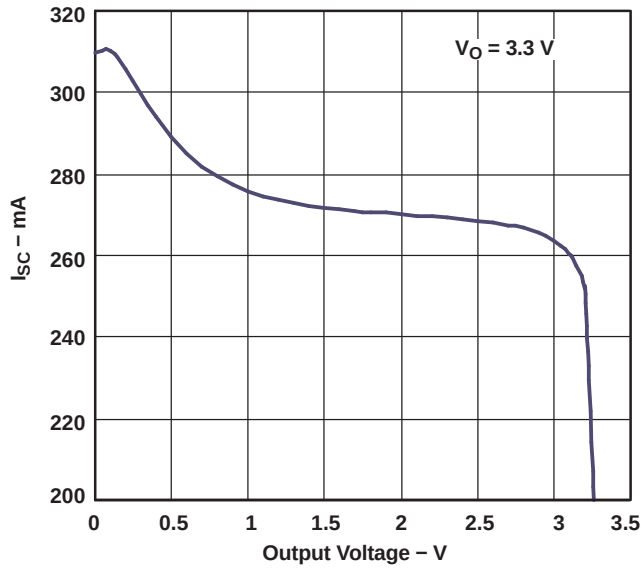

Figure 5.

GROUND-PIN CURRENT vs LOAD CURRENT

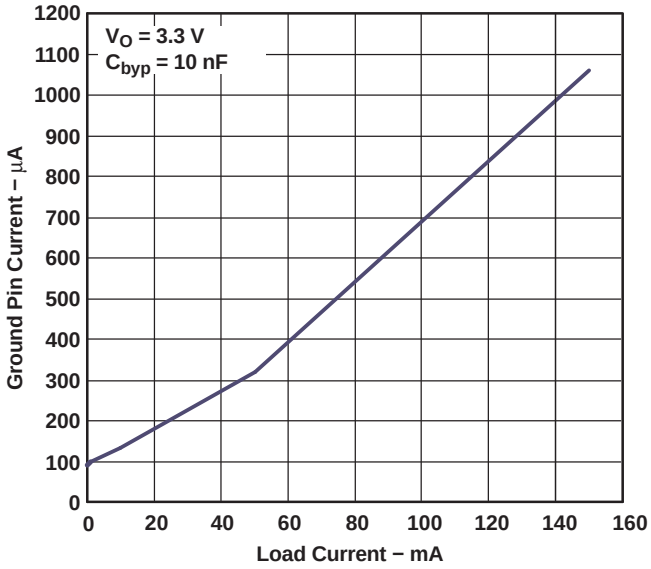

Figure 6.

RIPPLE REJECTION vs FREQUENCY

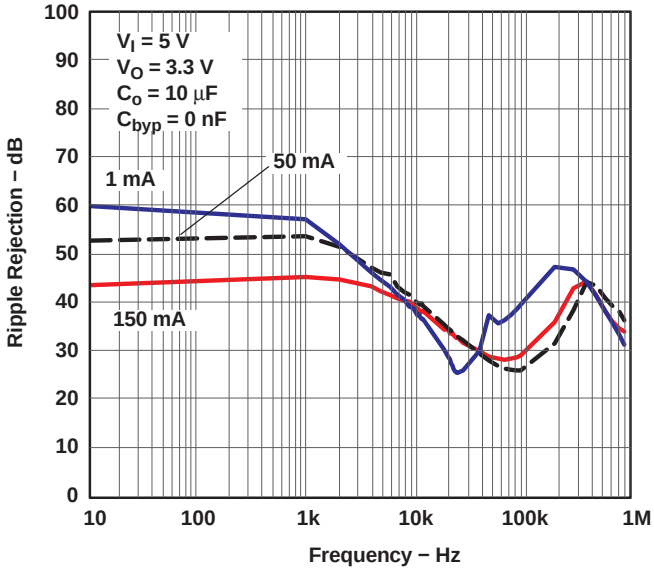

Figure 7.

RIPPLE REJECTION vs FREQUENCY

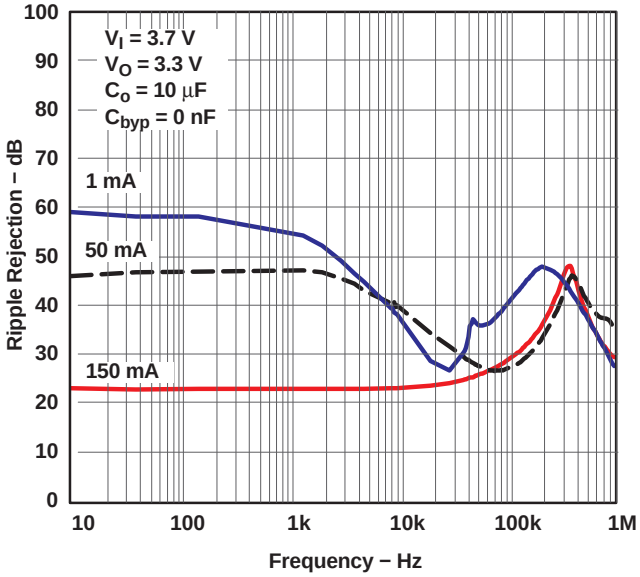

Figure 8.

TYPICAL PERFORMANCE CHARACTERISTICS (continued)

C_{IN} = 1 µF, C_{OUT} = 4.7 µF, V_{IN} = $V_{OUT(NOM)}$ + 1 V, T_A = 25°C, ON/$\overline{OFF}$ pin tied to V_{IN} (unless otherwise specified)

RIPPLE REJECTION
vs
FREQUENCY

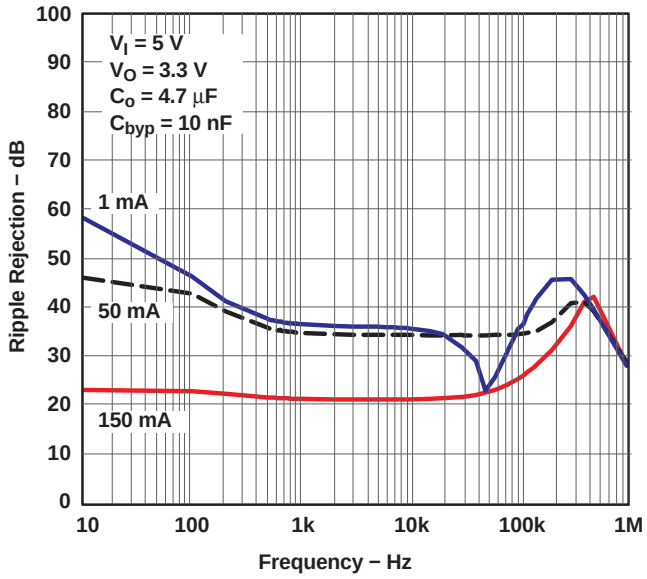

Figure 9.

RIPPLE REJECTION
vs
FREQUENCY

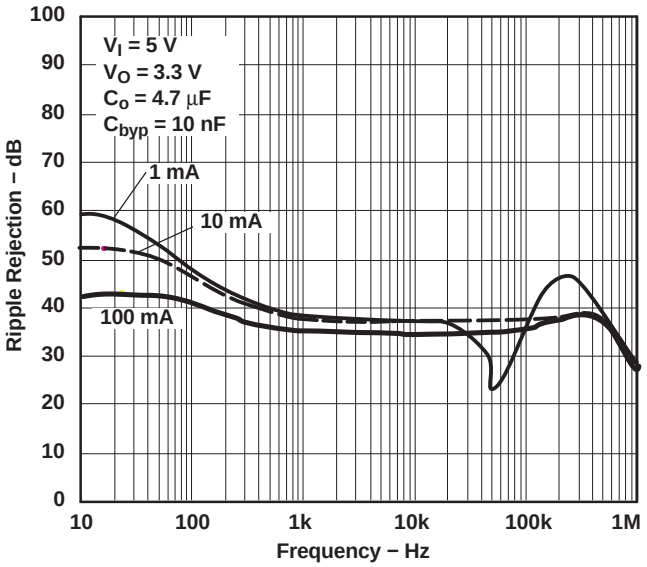

Figure 10.

OUTPUT IMPEDANCE
vs
FREQUENCY

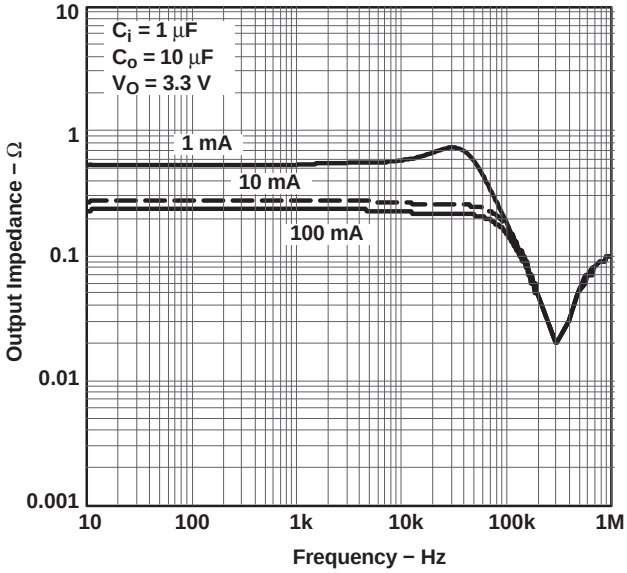

Figure 11.

OUTPUT IMPEDANCE
vs
FREQUENCY

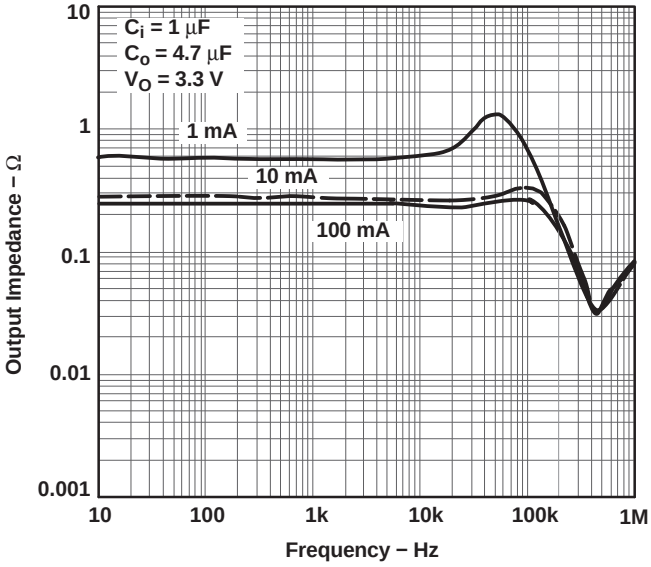

Figure 12.

TYPICAL PERFORMANCE CHARACTERISTICS (continued)

C_{IN} = 1 µF, C_{OUT} = 4.7 µF, V_{IN} = $V_{OUT(NOM)}$ + 1 V, T_A = 25°C, ON/$\overline{OFF}$ pin tied to V_{IN} (unless otherwise specified)

OUTPUT NOISE DENSITY vs FREQUENCY

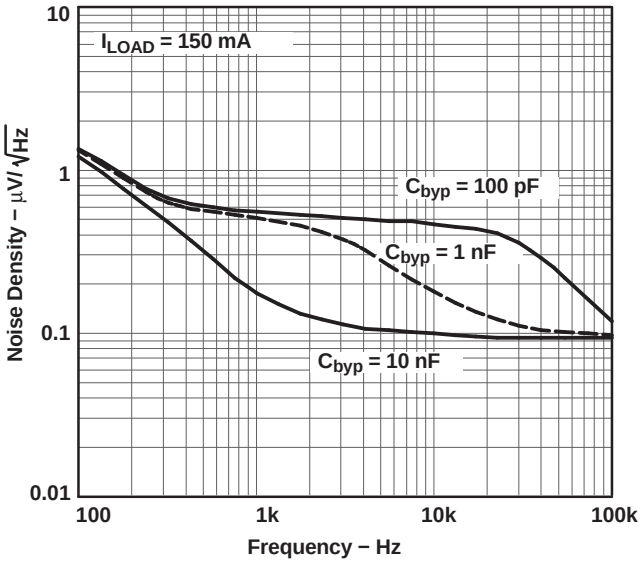

Figure 13.

OUTPUT NOISE DENSITY vs FREQUENCY

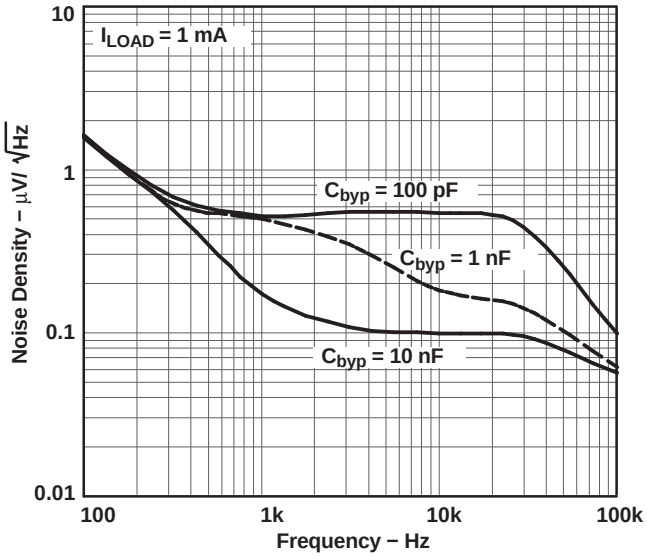

Figure 14.

INPUT CURRENT vs INPUT VOLTAGE

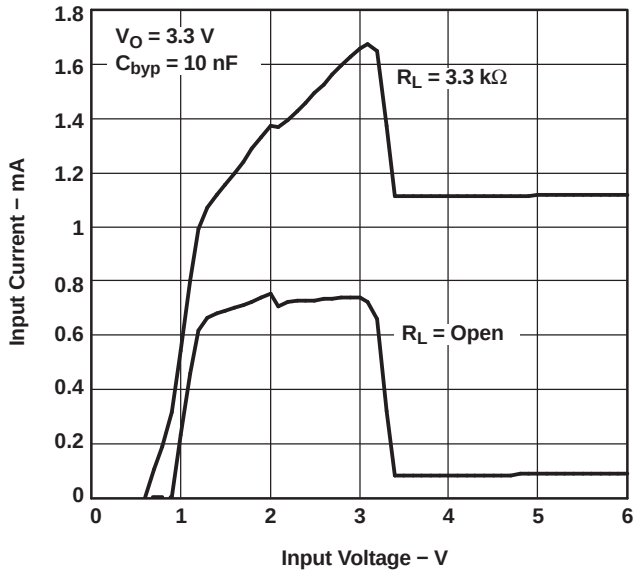

Figure 15.

GROUND-PIN CURRENT vs TEMPERATURE

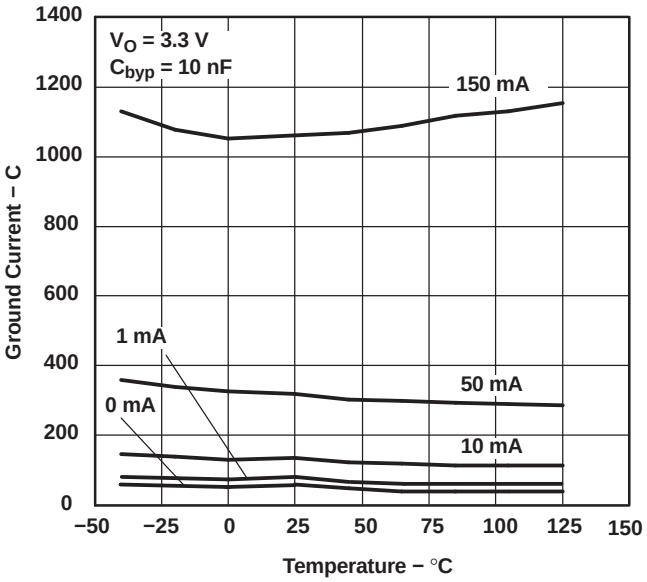

Figure 16.

TYPICAL PERFORMANCE CHARACTERISTICS (continued)

C_{IN} = 1 µF, C_{OUT} = 4.7 µF, V_{IN} = $V_{OUT(NOM)}$ + 1 V, T_A = 25°C, ON/$\overline{OFF}$ pin tied to V_{IN} (unless otherwise specified)

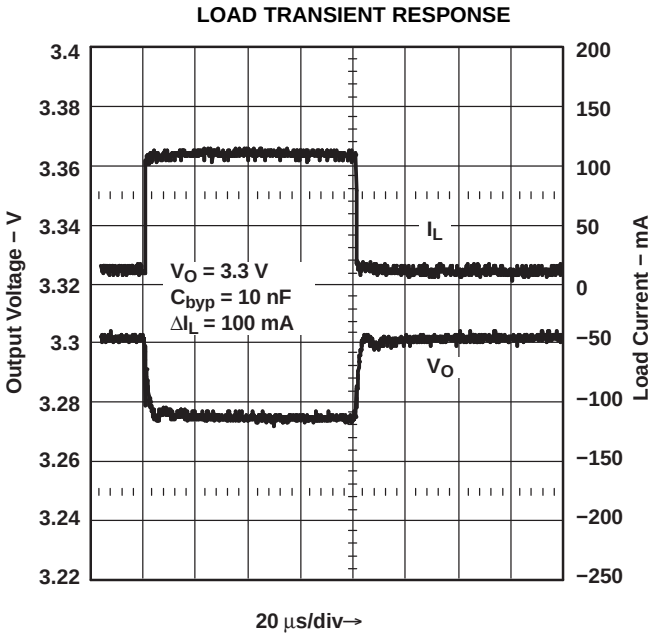

Figure 17.

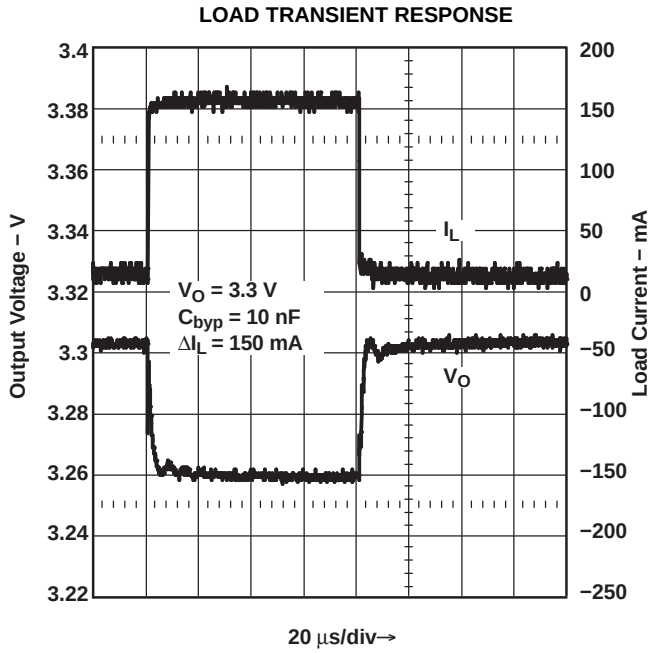

Figure 18.

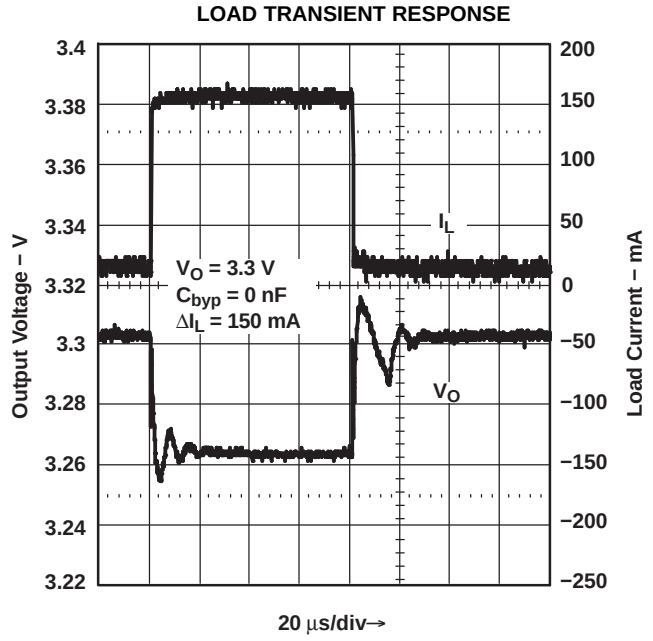

Figure 19.

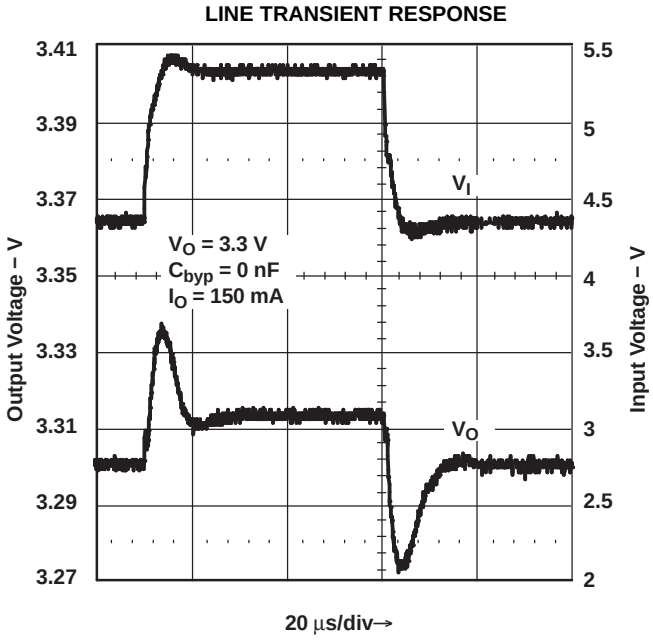

Figure 20.

TYPICAL PERFORMANCE CHARACTERISTICS (continued)

C_{IN} = 1 µF, C_{OUT} = 4.7 µF, V_{IN} = $V_{OUT(NOM)}$ + 1 V, T_A = 25°C, ON/$\overline{OFF}$ pin tied to V_{IN} (unless otherwise specified)

LINE TRANSIENT RESPONSE

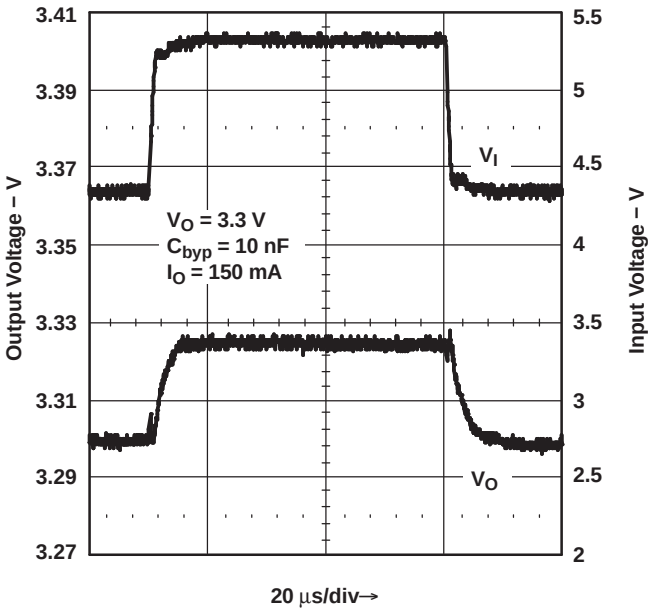

Figure 21.

LINE TRANSIENT RESPONSE

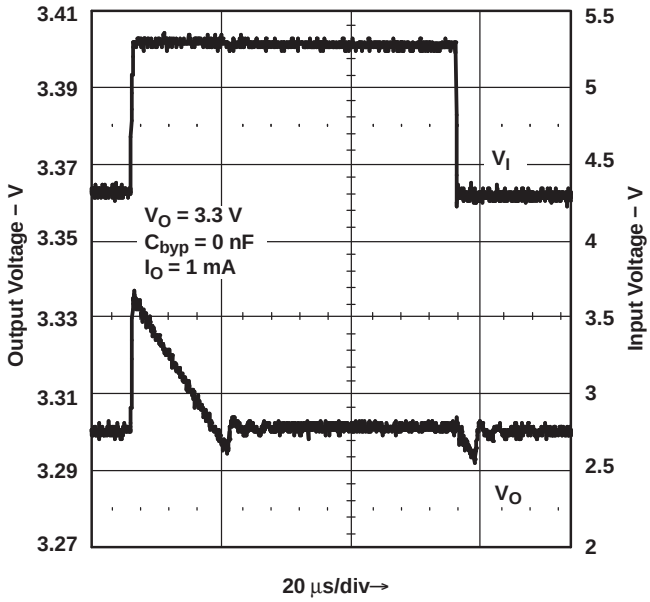

Figure 22.

LINE TRANSIENT RESPONSE

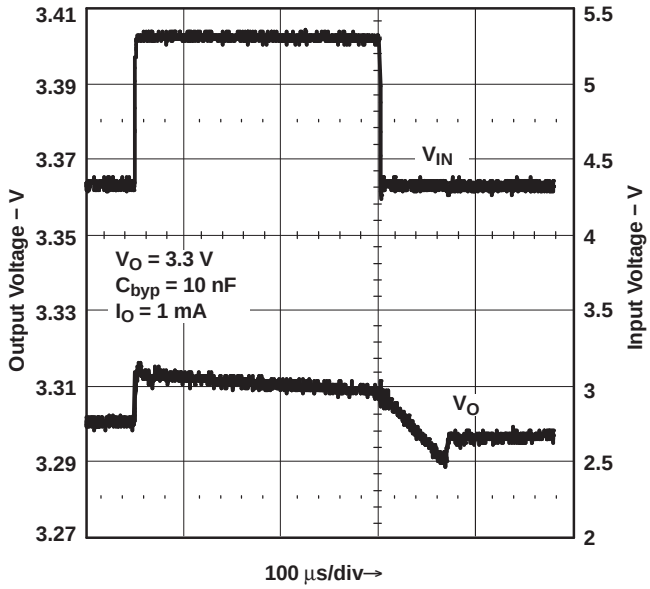

Figure 23.

TURN-ON TIME

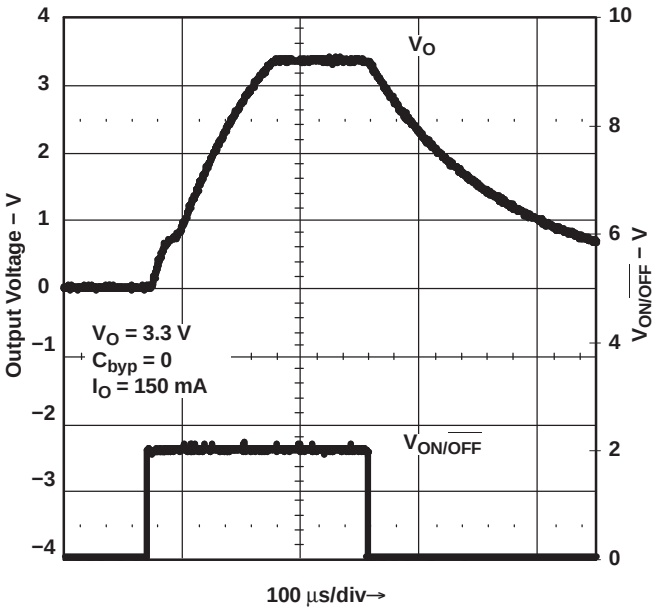

Figure 24.

TYPICAL PERFORMANCE CHARACTERISTICS (continued)

C_{IN} = 1 µF, C_{OUT} = 4.7 µF, V_{IN} = $V_{OUT(NOM)}$ + 1 V, T_A = 25°C, ON/$\overline{OFF}$ pin tied to V_{IN} (unless otherwise specified)

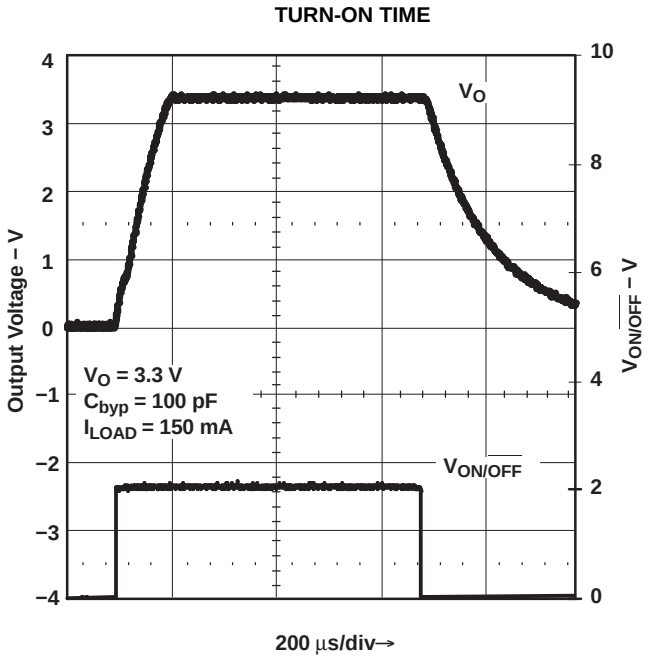

Figure 25.

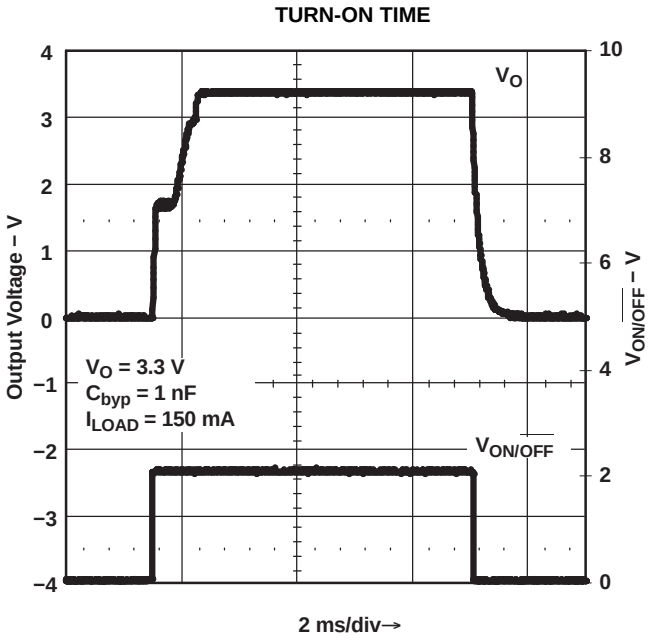

Figure 26.

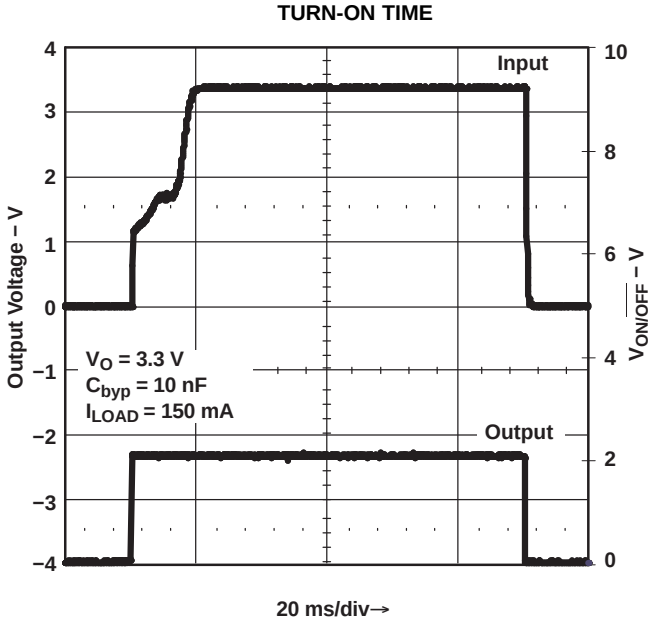

Figure 27.

APPLICATION INFORMATION

Capacitors

Input Capacitor (C_{IN})

A minimum value of 1 µF (over the entire operating temperature range) is required at the input of the LP2985. In addition, this input capacitor should be located within 1 cm of the input pin and connected to a clean analog ground. There are no equivalent series resistance (ESR) requirements for this capacitor, and the capacitance can be increased without limit.

Output Capacitor (C_{OUT})

As an advantage over other regulators, the LP2985 permits the use of low-ESR capacitors at the output, including ceramic capacitors that can have an ESR as low as 5 mΩ. Tantalum and film capacitors also can be used if size and cost are not issues. The output capacitor also should be located within 1 cm of the output pin and be returned to a clean analog ground.

As with other PNP LDOs, stability conditions require the output capacitor to have a minimum capacitance and an ESR that falls within a certain range.

- Minimum C_{OUT}: 2.2 µF (can be increased without limit to improve transient response stability margin)
- ESR range: see Figure 28 through Figure 30

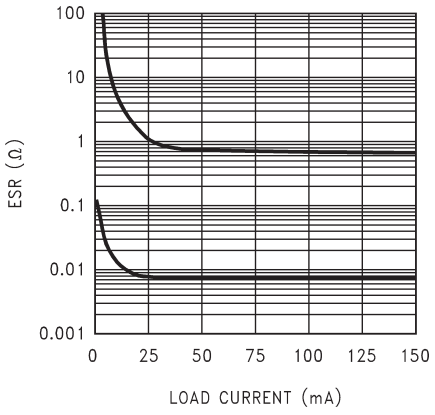

Figure 28. 2.2-µF Stable ESR Range for Output Voltage ≤2.3 V

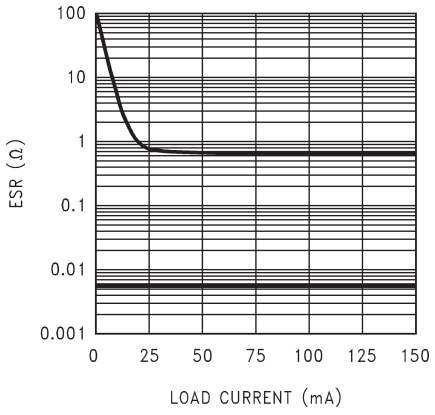

Figure 29. 4.7-µF Stable ESR Range for Output Voltage ≤2.3 V

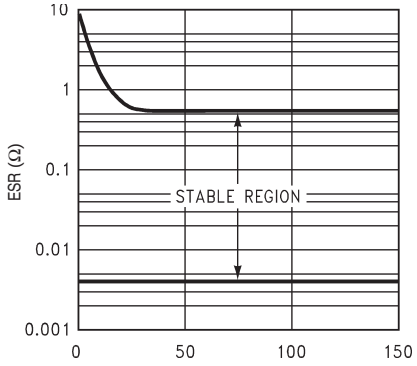

Figure 30. 2.2-µF/3.3-µF Stable ESR Range for Output Voltage ≥2.5 V

It is critical that both the minimum capacitance and ESR requirement be met *over the entire operating temperature range*. Depending on the type of capacitors used, both these parameters can vary significantly with temperature (see *capacitor characteristics*).

APPLICATION INFORMATION (continued)

Noise Bypass Capacitor (C_{BYPASS})

The LP2985 allows for low-noise performance with the use of a bypass capacitor that is connected to the internal bandgap reference via the BYPASS pin. This high-impedance bandgap circuitry is biased in the microampere range and, thus, cannot be loaded significantly, otherwise, its output – and, correspondingly, the output of the regulator – changes. Thus, for best output accuracy, dc leakage current through C_{BYPASS} should be minimized as much as possible and never should exceed 100 nA.

A 10-nF capacitor is recommended for C_{BYPASS}. Ceramic and film capacitors are well suited for this purpose.

Capacitor Characteristics

Ceramics

Ceramic capacitors are ideal choices for use on the output of the LP2985 for several reasons. For capacitances in the range of 2.2 µF to 4.7 µF, ceramic capacitors have the lowest cost and the lowest ESR, making them choice candidates for filtering high-frequency noise. For instance, a typical 2.2-µF ceramic capacitor has an ESR in the range of 10 mΩ to 20 mΩ and, thus, satisfies minimum ESR requirements of the regulator.

Ceramic capacitors have one major disadvantage that must be taken into account – a poor temperature coefficient, where the capacitance can vary significantly with temperature. For instance, a large-value ceramic capacitor (≥2.2 µF) can lose more than half of its capacitance as the temperature rises from 25°C to 85°C. Thus, a 2.2-µF capacitor at 25°C drops well below the minimum C_{OUT} required for stability, as ambient temperature rises. For this reason, select an output capacitor that maintains the minimum 2.2 µF required for stability over the entire operating temperature range. Note that there are some ceramic capacitors that can maintain a ±15% capacitance tolerance over temperature.

Tantalum

Tantalum capacitors can be used at the output of the LP2985, but there are significant disadvantages that could prohibit their use:

- In the 1-µF to 4.7-µF range, tantalum capacitors are more expensive than ceramics of the equivalent capacitance and voltage ratings.
- Tantalum capacitors have higher ESRs than their equivalent-sized ceramic counterparts. Thus, to meet the ESR requirements, a higher-capacitance tantalum may be required, at the expense of larger size and higher cost.
- The ESR of a tantalum capacitor increases as temperature drops, as much as double from 25°C to –40°C. Thus, ESR margins must be maintained over the temperature range to prevent regulator instability.

ON/$\overline{\text{OFF}}$ Operation

The LP2985 allows for a shutdown mode via the ON/$\overline{\text{OFF}}$ pin. Driving the pin LOW (≤0.3 V) turns the device OFF; conversely, a HIGH (≥1.6 V) turns the device ON. If the shutdown feature is not used, ON/$\overline{\text{OFF}}$ should be connected to the input to ensure that the regulator is on at all times. For proper operation, do not leave ON/$\overline{\text{OFF}}$ unconnected, and apply a signal with a slew rate of ≥40 mV/µs.

Reverse Input-Output Voltage

There is an inherent diode present across the PNP pass element of the LP2985.

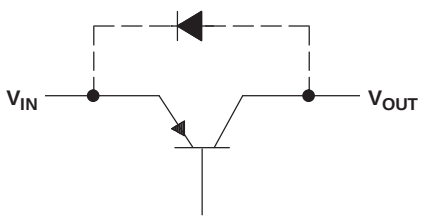

APPLICATION INFORMATION (continued)

With the anode connected to the output, this diode is reverse biased during normal operation, since the input voltage is higher than the output. However, if the output is pulled higher than the input for any reason, this diode is forward biased and can cause a parasitic silicon-controlled rectifier (SCR) to latch, resulting in high current flowing from the output to the input. Thus, to prevent possible damage to the regulator in any application where the output may be pulled above the input, an external Schottky diode should be connected between the output and input. With the anode on output, this Schottky limits the reverse voltage across the output and input pins to ~0.3 V, preventing the regulator's internal diode from forward biasing.

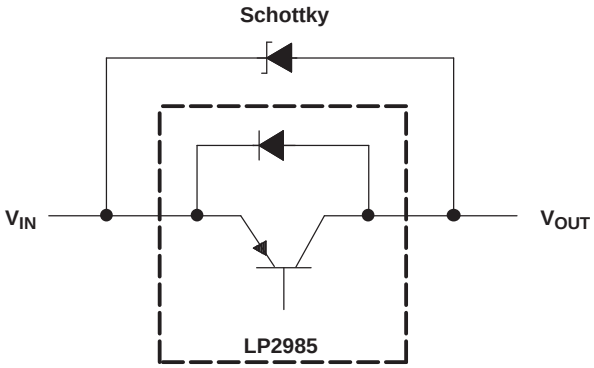

PACKAGING INFORMATION

Orderable Device	Status (1)	Package Type	Package Drawing	Pins	Package Qty	Eco Plan (2)	Lead/Ball Finish	MSL Peak Temp (3)
LP2985-18DBVR	ACTIVE	SOT-23	DBV	5	3000	Green (RoHS & no Sb/Br)	CU NIPDAU	Level-1-260C-UNLIM
LP2985-18DBVRE4	ACTIVE	SOT-23	DBV	5	3000	Green (RoHS & no Sb/Br)	CU NIPDAU	Level-1-260C-UNLIM
LP2985-18DBVT	ACTIVE	SOT-23	DBV	5	250	Green (RoHS & no Sb/Br)	CU NIPDAU	Level-1-260C-UNLIM
LP2985-18DBVTE4	ACTIVE	SOT-23	DBV	5	250	Green (RoHS & no Sb/Br)	CU NIPDAU	Level-1-260C-UNLIM
LP2985-25DBVR	ACTIVE	SOT-23	DBV	5	3000	Green (RoHS & no Sb/Br)	CU NIPDAU	Level-1-260C-UNLIM
LP2985-25DBVRG4	ACTIVE	SOT-23	DBV	5	3000	Green (RoHS & no Sb/Br)	CU NIPDAU	Level-1-260C-UNLIM
LP2985-25DBVT	ACTIVE	SOT-23	DBV	5	250	Green (RoHS & no Sb/Br)	CU NIPDAU	Level-1-260C-UNLIM
LP2985-25DBVTG4	ACTIVE	SOT-23	DBV	5	250	Green (RoHS & no Sb/Br)	CU NIPDAU	Level-1-260C-UNLIM
LP2985-28DBVR	ACTIVE	SOT-23	DBV	5	3000	Green (RoHS & no Sb/Br)	CU NIPDAU	Level-1-260C-UNLIM
LP2985-28DBVRE4	ACTIVE	SOT-23	DBV	5	3000	Green (RoHS & no Sb/Br)	CU NIPDAU	Level-1-260C-UNLIM
LP2985-28DBVT	ACTIVE	SOT-23	DBV	5	250	Green (RoHS & no Sb/Br)	CU NIPDAU	Level-1-260C-UNLIM
LP2985-28DBVTE4	ACTIVE	SOT-23	DBV	5	250	Green (RoHS & no Sb/Br)	CU NIPDAU	Level-1-260C-UNLIM
LP2985-29DBVR	ACTIVE	SOT-23	DBV	5	3000	Green (RoHS & no Sb/Br)	CU NIPDAU	Level-1-260C-UNLIM
LP2985-29DBVRG4	ACTIVE	SOT-23	DBV	5	3000	Green (RoHS & no Sb/Br)	CU NIPDAU	Level-1-260C-UNLIM
LP2985-29DBVT	ACTIVE	SOT-23	DBV	5	250	Green (RoHS & no Sb/Br)	CU NIPDAU	Level-1-260C-UNLIM
LP2985-29DBVTG4	ACTIVE	SOT-23	DBV	5	250	Green (RoHS & no Sb/Br)	CU NIPDAU	Level-1-260C-UNLIM
LP2985-30DBVR	ACTIVE	SOT-23	DBV	5	3000	Green (RoHS & no Sb/Br)	CU NIPDAU	Level-1-260C-UNLIM
LP2985-30DBVRG4	ACTIVE	SOT-23	DBV	5	3000	Green (RoHS & no Sb/Br)	CU NIPDAU	Level-1-260C-UNLIM
LP2985-30DBVT	ACTIVE	SOT-23	DBV	5	250	Green (RoHS & no Sb/Br)	CU NIPDAU	Level-1-260C-UNLIM
LP2985-30DBVTG4	ACTIVE	SOT-23	DBV	5	250	Green (RoHS & no Sb/Br)	CU NIPDAU	Level-1-260C-UNLIM
LP2985-33DBVR	ACTIVE	SOT-23	DBV	5	3000	Green (RoHS & no Sb/Br)	CU NIPDAU	Level-1-260C-UNLIM
LP2985-33DBVRE4	ACTIVE	SOT-23	DBV	5	3000	Green (RoHS & no Sb/Br)	CU NIPDAU	Level-1-260C-UNLIM
LP2985-33DBVT	ACTIVE	SOT-23	DBV	5	250	Green (RoHS & no Sb/Br)	CU NIPDAU	Level-1-260C-UNLIM
LP2985-33DBVTE4	ACTIVE	SOT-23	DBV	5	250	Green (RoHS & no Sb/Br)	CU NIPDAU	Level-1-260C-UNLIM
LP2985-50DBVR	ACTIVE	SOT-23	DBV	5	3000	Green (RoHS & no Sb/Br)	CU NIPDAU	Level-1-260C-UNLIM

Orderable Device	Status (1)	Package Type	Package Drawing	Pins	Package Qty	Eco Plan (2)	Lead/Ball Finish	MSL Peak Temp (3)
LP2985-50DBVRG4	ACTIVE	SOT-23	DBV	5	3000	Green (RoHS & no Sb/Br)	CU NIPDAU	Level-1-260C-UNLIM
LP2985-50DBVT	ACTIVE	SOT-23	DBV	5	250	Green (RoHS & no Sb/Br)	CU NIPDAU	Level-1-260C-UNLIM
LP2985-50DBVTG4	ACTIVE	SOT-23	DBV	5	250	Green (RoHS & no Sb/Br)	CU NIPDAU	Level-1-260C-UNLIM
LP2985A-18DBVR	ACTIVE	SOT-23	DBV	5	3000	Green (RoHS & no Sb/Br)	CU NIPDAU	Level-1-260C-UNLIM
LP2985A-18DBVRE4	ACTIVE	SOT-23	DBV	5	3000	Green (RoHS & no Sb/Br)	CU NIPDAU	Level-1-260C-UNLIM
LP2985A-18DBVT	ACTIVE	SOT-23	DBV	5	250	Green (RoHS & no Sb/Br)	CU NIPDAU	Level-1-260C-UNLIM
LP2985A-18DBVTE4	ACTIVE	SOT-23	DBV	5	250	Green (RoHS & no Sb/Br)	CU NIPDAU	Level-1-260C-UNLIM
LP2985A-25DBVR	ACTIVE	SOT-23	DBV	5	3000	Green (RoHS & no Sb/Br)	CU NIPDAU	Level-1-260C-UNLIM
LP2985A-25DBVRG4	ACTIVE	SOT-23	DBV	5	3000	Green (RoHS & no Sb/Br)	CU NIPDAU	Level-1-260C-UNLIM
LP2985A-25DBVT	ACTIVE	SOT-23	DBV	5	250	Green (RoHS & no Sb/Br)	CU NIPDAU	Level-1-260C-UNLIM
LP2985A-25DBVTG4	ACTIVE	SOT-23	DBV	5	250	Green (RoHS & no Sb/Br)	CU NIPDAU	Level-1-260C-UNLIM
LP2985A-28DBVR	ACTIVE	SOT-23	DBV	5	3000	Green (RoHS & no Sb/Br)	CU NIPDAU	Level-1-260C-UNLIM
LP2985A-28DBVRE4	ACTIVE	SOT-23	DBV	5	3000	Green (RoHS & no Sb/Br)	CU NIPDAU	Level-1-260C-UNLIM
LP2985A-28DBVT	ACTIVE	SOT-23	DBV	5	250	Green (RoHS & no Sb/Br)	CU NIPDAU	Level-1-260C-UNLIM
LP2985A-28DBVTE4	ACTIVE	SOT-23	DBV	5	250	Green (RoHS & no Sb/Br)	CU NIPDAU	Level-1-260C-UNLIM
LP2985A-29DBVR	ACTIVE	SOT-23	DBV	5	3000	Green (RoHS & no Sb/Br)	CU NIPDAU	Level-1-260C-UNLIM
LP2985A-29DBVRG4	ACTIVE	SOT-23	DBV	5	3000	Green (RoHS & no Sb/Br)	CU NIPDAU	Level-1-260C-UNLIM
LP2985A-29DBVT	ACTIVE	SOT-23	DBV	5	250	Green (RoHS & no Sb/Br)	CU NIPDAU	Level-1-260C-UNLIM
LP2985A-29DBVTG4	ACTIVE	SOT-23	DBV	5	250	Green (RoHS & no Sb/Br)	CU NIPDAU	Level-1-260C-UNLIM
LP2985A-30DBVR	ACTIVE	SOT-23	DBV	5	3000	Green (RoHS & no Sb/Br)	CU NIPDAU	Level-1-260C-UNLIM
LP2985A-30DBVRG4	ACTIVE	SOT-23	DBV	5	3000	Green (RoHS & no Sb/Br)	CU NIPDAU	Level-1-260C-UNLIM
LP2985A-30DBVT	ACTIVE	SOT-23	DBV	5	250	Green (RoHS & no Sb/Br)	CU NIPDAU	Level-1-260C-UNLIM
LP2985A-30DBVTG4	ACTIVE	SOT-23	DBV	5	250	Green (RoHS & no Sb/Br)	CU NIPDAU	Level-1-260C-UNLIM
LP2985A-33DBVR	ACTIVE	SOT-23	DBV	5	3000	Green (RoHS & no Sb/Br)	CU NIPDAU	Level-1-260C-UNLIM
LP2985A-33DBVRE4	ACTIVE	SOT-23	DBV	5	3000	Green (RoHS & no Sb/Br)	CU NIPDAU	Level-1-260C-UNLIM
LP2985A-33DBVT	ACTIVE	SOT-23	DBV	5	250	Green (RoHS & no Sb/Br)	CU NIPDAU	Level-1-260C-UNLIM

Orderable Device	Status [1]	Package Type	Package Drawing	Pins	Package Qty	Eco Plan [2]	Lead/Ball Finish	MSL Peak Temp [3]
LP2985A-33DBVTE4	ACTIVE	SOT-23	DBV	5	250	Green (RoHS & no Sb/Br)	CU NIPDAU	Level-1-260C-UNLIM
LP2985A-50DBVR	ACTIVE	SOT-23	DBV	5	3000	Green (RoHS & no Sb/Br)	CU NIPDAU	Level-1-260C-UNLIM
LP2985A-50DBVRG4	ACTIVE	SOT-23	DBV	5	3000	Green (RoHS & no Sb/Br)	CU NIPDAU	Level-1-260C-UNLIM
LP2985A-50DBVT	ACTIVE	SOT-23	DBV	5	250	Green (RoHS & no Sb/Br)	CU NIPDAU	Level-1-260C-UNLIM
LP2985A-50DBVTG4	ACTIVE	SOT-23	DBV	5	250	Green (RoHS & no Sb/Br)	CU NIPDAU	Level-1-260C-UNLIM

[1] The marketing status values are defined as follows:
ACTIVE: Product device recommended for new designs.
LIFEBUY: TI has announced that the device will be discontinued, and a lifetime-buy period is in effect.
NRND: Not recommended for new designs. Device is in production to support existing customers, but TI does not recommend using this part in a new design.
PREVIEW: Device has been announced but is not in production. Samples may or may not be available.
OBSOLETE: TI has discontinued the production of the device.

[2] Eco Plan - The planned eco-friendly classification: Pb-Free (RoHS), Pb-Free (RoHS Exempt), or Green (RoHS & no Sb/Br) - please check http://www.ti.com/productcontent for the latest availability information and additional product content details.
TBD: The Pb-Free/Green conversion plan has not been defined.
Pb-Free (RoHS): TI's terms "Lead-Free" or "Pb-Free" mean semiconductor products that are compatible with the current RoHS requirements for all 6 substances, including the requirement that lead not exceed 0.1% by weight in homogeneous materials. Where designed to be soldered at high temperatures, TI Pb-Free products are suitable for use in specified lead-free processes.
Pb-Free (RoHS Exempt): This component has a RoHS exemption for either 1) lead-based flip-chip solder bumps used between the die and package, or 2) lead-based die adhesive used between the die and leadframe. The component is otherwise considered Pb-Free (RoHS compatible) as defined above.
Green (RoHS & no Sb/Br): TI defines "Green" to mean Pb-Free (RoHS compatible), and free of Bromine (Br) and Antimony (Sb) based flame retardants (Br or Sb do not exceed 0.1% by weight in homogeneous material)

[3] MSL, Peak Temp. -- The Moisture Sensitivity Level rating according to the JEDEC industry standard classifications, and peak solder temperature.

Important Information and Disclaimer: The information provided on this page represents TI's knowledge and belief as of the date that it is provided. TI bases its knowledge and belief on information provided by third parties, and makes no representation or warranty as to the accuracy of such information. Efforts are underway to better integrate information from third parties. TI has taken and continues to take reasonable steps to provide representative and accurate information but may not have conducted destructive testing or chemical analysis on incoming materials and chemicals. TI and TI suppliers consider certain information to be proprietary, and thus CAS numbers and other limited information may not be available for release.

In no event shall TI's liability arising out of such information exceed the total purchase price of the TI part(s) at issue in this document sold by TI to Customer on an annual basis.

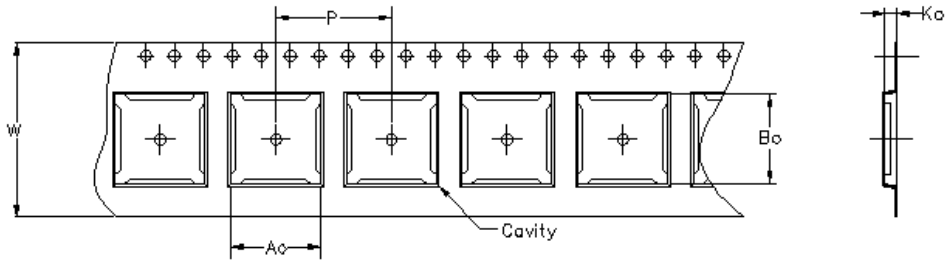

Carrier tape design is defined largely by the component lentgh, width, and thickness.

Ao = Dimension designed to accommodate the component width.
Bo = Dimension designed to accommodate the component length.
Ko = Dimension designed to accommodate the component thickness.
W = Overall width of the carrier tape.
P = Pitch between successive cavity centers.

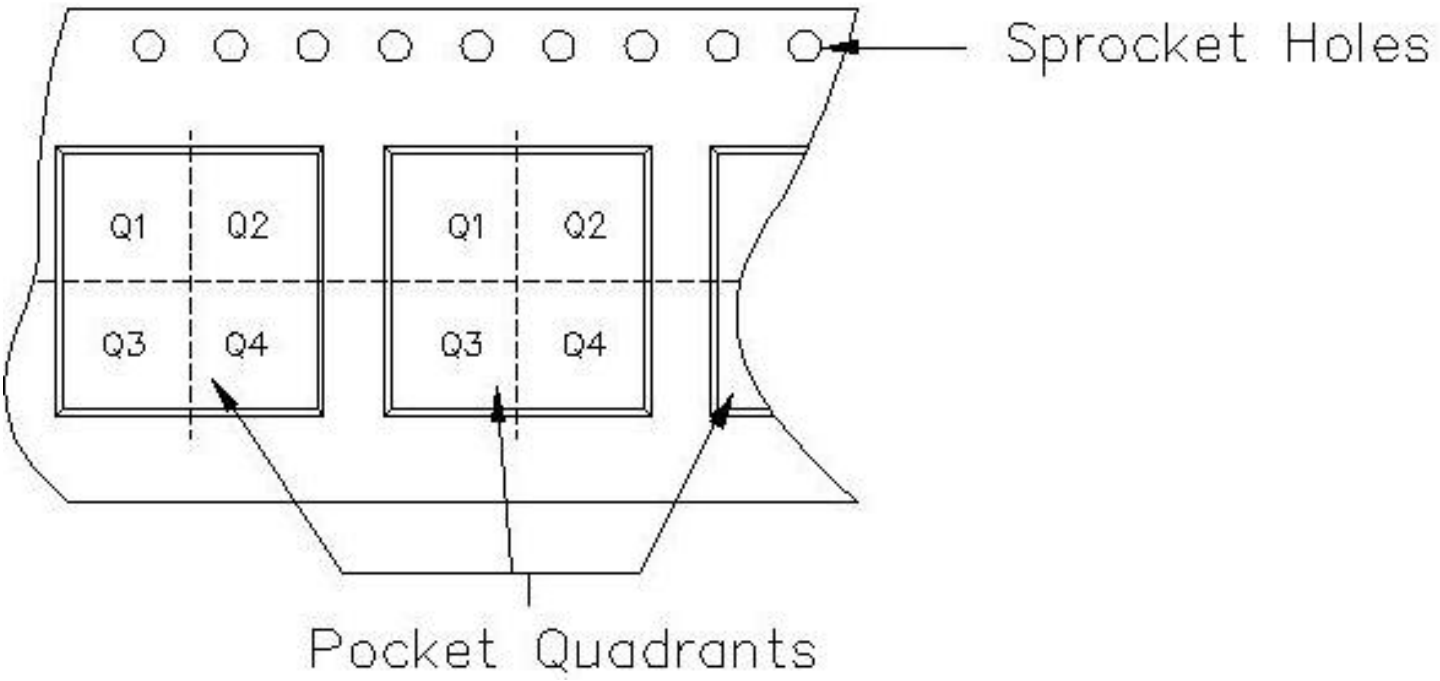

TAPE AND REEL INFORMATION

Device	Package	Pins	Site	Reel Diameter (mm)	Reel Width (mm)	A0 (mm)	B0 (mm)	K0 (mm)	P1 (mm)	W (mm)	Pin1 Quadrant
LP2985-18DBVR	DBV	5	LEN	180	9	3.15	3.2	1.4	4	8	Q3
LP2985-18DBVT	DBV	5	LEN	180	9	3.15	3.2	1.4	4	8	Q3
LP2985-25DBVR	DBV	5	LEN	180	9	3.15	3.2	1.4	4	8	Q3
LP2985-25DBVT	DBV	5	LEN	180	9	3.15	3.2	1.4	4	8	Q3
LP2985-28DBVR	DBV	5	LEN	180	9	3.15	3.2	1.4	4	8	Q3
LP2985-28DBVT	DBV	5	LEN	180	9	3.15	3.2	1.4	4	8	Q3
LP2985-29DBVR	DBV	5	LEN	180	9	3.15	3.2	1.4	4	8	Q3
LP2985-29DBVT	DBV	5	LEN	180	9	3.15	3.2	1.4	4	8	Q3
LP2985-30DBVR	DBV	5	LEN	180	9	3.15	3.2	1.4	4	8	Q3
LP2985-30DBVT	DBV	5	LEN	180	9	3.15	3.2	1.4	4	8	Q3
LP2985-33DBVR	DBV	5	HNC	180	9	3.23	3.17	1.37	4	8	Q3
LP2985-33DBVR	DBV	5	NFME	0	0	3.23	3.17	1.37	4	8	Q3
LP2985-33DBVT	DBV	5	HNC	180	9	3.23	3.17	1.37	4	8	Q3
LP2985-33DBVT	DBV	5	NFME	330	16	10.6	15.8	4.9	16	24	Q3
LP2985-50DBVR	DBV	5	LEN	180	9	3.15	3.2	1.4	4	8	Q3
LP2985-50DBVT	DBV	5	LEN	180	9	3.15	3.2	1.4	4	8	Q3
LP2985A-18DBVR	DBV	5	LEN	180	9	3.15	3.2	1.4	4	8	Q3
LP2985A-18DBVT	DBV	5	LEN	180	9	3.15	3.2	1.4	4	8	Q3
LP2985A-25DBVR	DBV	5	LEN	180	9	3.15	3.2	1.4	4	8	Q3
LP2985A-25DBVT	DBV	5	LEN	180	9	3.15	3.2	1.4	4	8	Q3
LP2985A-28DBVR	DBV	5	LEN	180	9	3.15	3.2	1.4	4	8	Q3
LP2985A-28DBVT	DBV	5	LEN	180	9	3.15	3.2	1.4	4	8	Q3
LP2985A-29DBVR	DBV	5	LEN	180	9	3.15	3.2	1.4	4	8	Q3
LP2985A-29DBVT	DBV	5	LEN	180	9	3.15	3.2	1.4	4	8	Q3
LP2985A-30DBVR	DBV	5	LEN	180	9	3.15	3.2	1.4	4	8	Q3
LP2985A-30DBVT	DBV	5	LEN	180	9	3.15	3.2	1.4	4	8	Q3
LP2985A-33DBVR	DBV	5	HNC	180	9	3.23	3.17	1.37	4	8	Q3
LP2985A-33DBVR	DBV	5	NFME	0	0	3.23	3.17	1.37	4	8	Q3
LP2985A-33DBVT	DBV	5	HNC	180	9	3.23	3.17	1.37	4	8	Q3
LP2985A-33DBVT	DBV	5	NFME	330	16	10.6	15.8	4.9	16	24	Q3
LP2985A-50DBVR	DBV	5	LEN	180	9	3.15	3.2	1.4	4	8	Q3
LP2985A-50DBVT	DBV	5	LEN	180	9	3.15	3.2	1.4	4	8	Q3

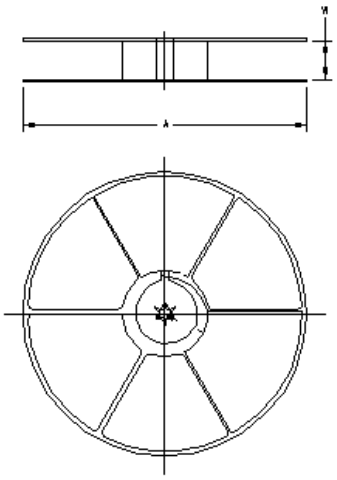

TAPE AND REEL BOX INFORMATION

Device	Package	Pins	Site	Length (mm)	Width (mm)	Height (mm)
LP2985-18DBVR	DBV	5	LEN	182.0	182.0	20.0
LP2985-18DBVT	DBV	5	LEN	182.0	182.0	20.0
LP2985-25DBVR	DBV	5	LEN	182.0	182.0	20.0
LP2985-25DBVT	DBV	5	LEN	182.0	182.0	20.0
LP2985-28DBVR	DBV	5	LEN	182.0	182.0	20.0
LP2985-28DBVT	DBV	5	LEN	182.0	182.0	20.0
LP2985-29DBVR	DBV	5	LEN	182.0	182.0	20.0
LP2985-29DBVT	DBV	5	LEN	182.0	182.0	20.0
LP2985-30DBVR	DBV	5	LEN	182.0	182.0	20.0
LP2985-30DBVT	DBV	5	LEN	182.0	182.0	20.0
LP2985-33DBVR	DBV	5	HNC	205.0	200.0	33.0
LP2985-33DBVR	DBV	5	NFME	185.0	185.0	220.0
LP2985-33DBVT	DBV	5	HNC	201.0	192.0	26.0
LP2985-33DBVT	DBV	5	NFME	0.0	0.0	0.0
LP2985-50DBVR	DBV	5	LEN	182.0	182.0	20.0
LP2985-50DBVT	DBV	5	LEN	182.0	182.0	20.0
LP2985A-18DBVR	DBV	5	LEN	182.0	182.0	20.0
LP2985A-18DBVT	DBV	5	LEN	182.0	182.0	20.0
LP2985A-25DBVR	DBV	5	LEN	182.0	182.0	20.0
LP2985A-25DBVT	DBV	5	LEN	182.0	182.0	20.0
LP2985A-28DBVR	DBV	5	LEN	182.0	182.0	20.0
LP2985A-28DBVT	DBV	5	LEN	182.0	182.0	20.0
LP2985A-29DBVR	DBV	5	LEN	182.0	182.0	20.0
LP2985A-29DBVT	DBV	5	LEN	182.0	182.0	20.0
LP2985A-30DBVR	DBV	5	LEN	182.0	182.0	20.0

Device	Package	Pins	Site	Length (mm)	Width (mm)	Height (mm)
LP2985A-30DBVT	DBV	5	LEN	182.0	182.0	20.0
LP2985A-33DBVR	DBV	5	HNC	205.0	200.0	33.0
LP2985A-33DBVR	DBV	5	NFME	185.0	185.0	220.0
LP2985A-33DBVT	DBV	5	HNC	201.0	192.0	26.0
LP2985A-33DBVT	DBV	5	NFME	0.0	0.0	0.0
LP2985A-50DBVR	DBV	5	LEN	182.0	182.0	20.0
LP2985A-50DBVT	DBV	5	LEN	182.0	182.0	20.0

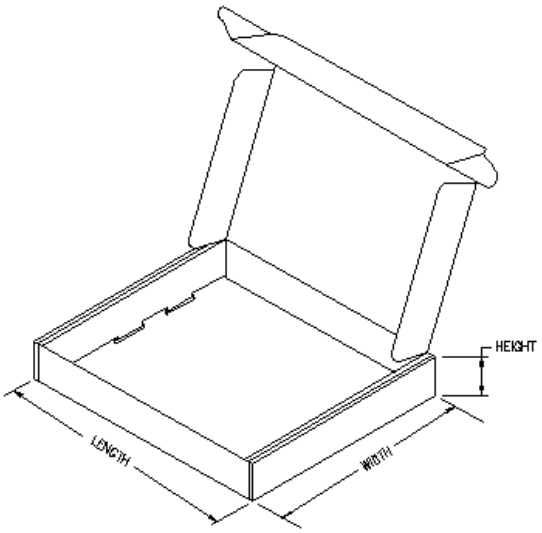

DBV (R–PDSO–G5) PLASTIC SMALL–OUTLINE PACKAGE

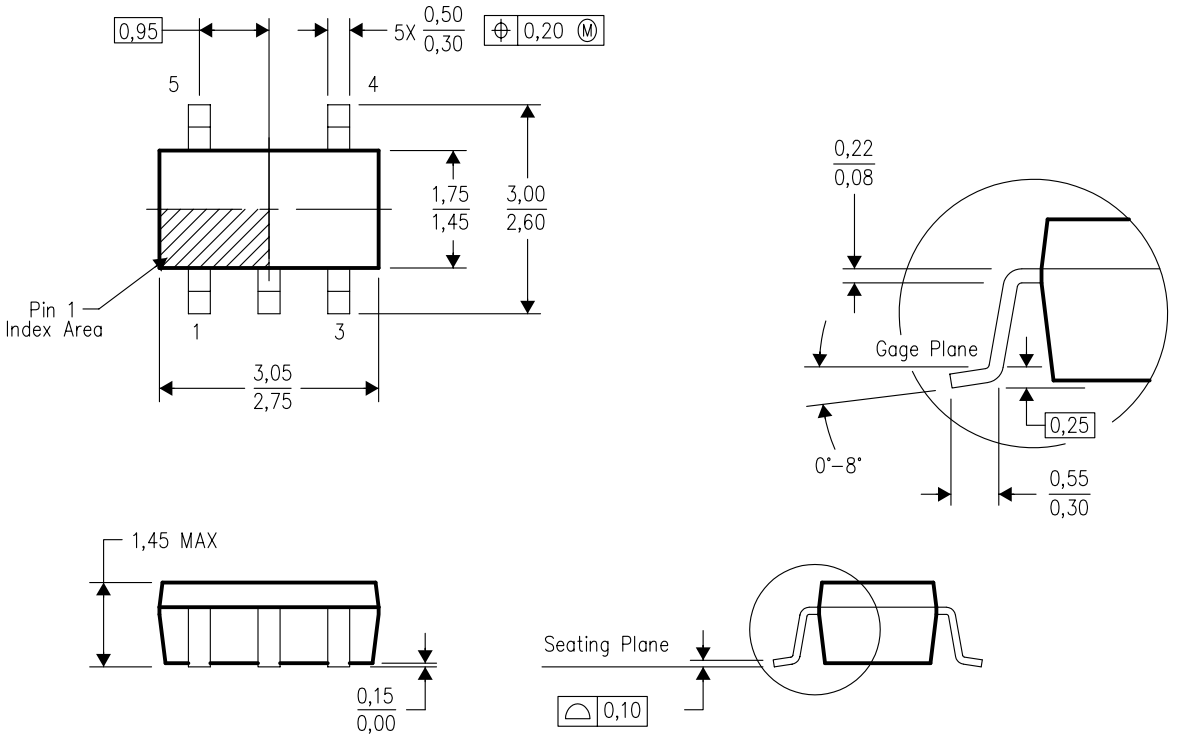

4073253–4/K 03/2006

NOTES:
A. All linear dimensions are in millimeters.
B. This drawing is subject to change without notice.
C. Body dimensions do not include mold flash or protrusion. Mold flash and protrusion shall not exceed 0.15 per side.
D. Falls within JEDEC MO–178 Variation AA.

IMPORTANT NOTICE

Texas Instruments Incorporated and its subsidiaries (TI) reserve the right to make corrections, modifications, enhancements, improvements, and other changes to its products and services at any time and to discontinue any product or service without notice. Customers should obtain the latest relevant information before placing orders and should verify that such information is current and complete. All products are sold subject to TI's terms and conditions of sale supplied at the time of order acknowledgment.

TI warrants performance of its hardware products to the specifications applicable at the time of sale in accordance with TI's standard warranty. Testing and other quality control techniques are used to the extent TI deems necessary to support this warranty. Except where mandated by government requirements, testing of all parameters of each product is not necessarily performed.

TI assumes no liability for applications assistance or customer product design. Customers are responsible for their products and applications using TI components. To minimize the risks associated with customer products and applications, customers should provide adequate design and operating safeguards.

TI does not warrant or represent that any license, either express or implied, is granted under any TI patent right, copyright, mask work right, or other TI intellectual property right relating to any combination, machine, or process in which TI products or services are used. Information published by TI regarding third-party products or services does not constitute a license from TI to use such products or services or a warranty or endorsement thereof. Use of such information may require a license from a third party under the patents or other intellectual property of the third party, or a license from TI under the patents or other intellectual property of TI.

Reproduction of TI information in TI data books or data sheets is permissible only if reproduction is without alteration and is accompanied by all associated warranties, conditions, limitations, and notices. Reproduction of this information with alteration is an unfair and deceptive business practice. TI is not responsible or liable for such altered documentation. Information of third parties may be subject to additional restrictions.

Resale of TI products or services with statements different from or beyond the parameters stated by TI for that product or service voids all express and any implied warranties for the associated TI product or service and is an unfair and deceptive business practice. TI is not responsible or liable for any such statements.

TI products are not authorized for use in safety-critical applications (such as life support) where a failure of the TI product would reasonably be expected to cause severe personal injury or death, unless officers of the parties have executed an agreement specifically governing such use. Buyers represent that they have all necessary expertise in the safety and regulatory ramifications of their applications, and acknowledge and agree that they are solely responsible for all legal, regulatory and safety-related requirements concerning their products and any use of TI products in such safety-critical applications, notwithstanding any applications-related information or support that may be provided by TI. Further, Buyers must fully indemnify TI and its representatives against any damages arising out of the use of TI products in such safety-critical applications.

TI products are neither designed nor intended for use in military/aerospace applications or environments unless the TI products are specifically designated by TI as military-grade or "enhanced plastic." Only products designated by TI as military-grade meet military specifications. Buyers acknowledge and agree that any such use of TI products which TI has not designated as military-grade is solely at the Buyer's risk, and that they are solely responsible for compliance with all legal and regulatory requirements in connection with such use.

TI products are neither designed nor intended for use in automotive applications or environments unless the specific TI products are designated by TI as compliant with ISO/TS 16949 requirements. Buyers acknowledge and agree that, if they use any non-designated products in automotive applications, TI will not be responsible for any failure to meet such requirements.

Following are URLs where you can obtain information on other Texas Instruments products and application solutions:

Products		**Applications**	
Amplifiers	amplifier.ti.com	Audio	www.ti.com/audio
Data Converters	dataconverter.ti.com	Automotive	www.ti.com/automotive
DSP	dsp.ti.com	Broadband	www.ti.com/broadband
Interface	interface.ti.com	Digital Control	www.ti.com/digitalcontrol
Logic	logic.ti.com	Military	www.ti.com/military
Power Mgmt	power.ti.com	Optical Networking	www.ti.com/opticalnetwork
Microcontrollers	microcontroller.ti.com	Security	www.ti.com/security
RFID	www.ti-rfid.com	Telephony	www.ti.com/telephony
Low Power Wireless	www.ti.com/lpw	Video & Imaging	www.ti.com/video
		Wireless	www.ti.com/wireless

Mailing Address: Texas Instruments, Post Office Box 655303, Dallas, Texas 75265
Copyright © 2007, Texas Instruments Incorporated