100-mA ULTRA-LOW DROPOUT REGULATOR WITH SHUTDOWN

FEATURES

- **Output Tolerance of**
  - **0.75% (A Grade)**
  - **1.25% (Standard Grade)**
- **Ultra-Low Dropout, Typically**
  - **200 mV at Full Load of 100 mA**
  - **7 mV at 1 mA**
- **Wide V_{IN} Range…16 V Max**
- **Low I_Q…600 μA Typ at Full Load of 100 mA**
- **Shutdown Current…0.01 μA Typ**
- **Fast Transient Response to Line and Load**
- **Overcurrent and Thermal Protection**
- **High Peak Current Capability**
- **ESD Protection Exceeds JESD 22**
  - **2000-V Human-Body Model (A114-A)**
  - **200-V Machine Model (A115-A)**

PORTABLE APPLICATIONS

- **Mobile Phones**
- **Laptops**
- **Personal Digital Assistants (PDAs)**
- **Digital Cameras and Camcorders**
- **CD and MP3 Players**

DBV (SOT-23) PACKAGE
(TOP VIEW)

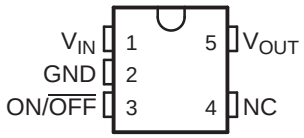

NC − No connect; must be left open

DESCRIPTION/ORDERING INFORMATION

The LP2981 family of fixed-output, low-dropout regulators offers exceptional, cost-effective performance for both portable and nonportable applications. Available in fixed voltages of 2.8 V, 3 V, 3.3 V, and 5 V, the family has an output tolerance of 0.75% for the A-grade devices (1.25% for the standard grade) and is capable of delivering 100-mA continuous load current. Standard regulator features, such as overcurrent and overtemperature protection, are included.

The LP2981 has features that make the regulator an ideal candidate for a variety of portable applications:

- Low dropout: A PNP pass element allows a typical dropout of 200 mV at 100-mA load current and 7 mV at 1-mA load.
- Low quiescent current: The use of a vertical PNP process allows for quiescent currents that are considerably lower than those associated with traditional lateral PNP regulators.
- Shutdown: A shutdown feature is available, allowing the regulator to consume only 0.01 μA when the ON/$\overline{\text{OFF}}$ pin is pulled low.
- Small packaging: For the most space-constrained needs, the regulator is available in the SOT-23 package.

Please be aware that an important notice concerning availability, standard warranty, and use in critical applications of Texas Instruments semiconductor products and disclaimers thereto appears at the end of this data sheet.

PRODUCTION DATA information is current as of publication date. Products conform to specifications per the terms of the Texas Instruments standard warranty. Production processing does not necessarily include testing of all parameters.

Copyright © 2004–2008, Texas Instruments Incorporated

ORDERING INFORMATION(1)

T_J	PART GRADE	V_{OUT} (NOM)	PACKAGE(2)		ORDERABLE PART NUMBER	TOP-SIDE MARKING(3)
–40°C to 125°C	A grade: 0.75% tolerance	2.8 V	SOT-23-5 – DBV	Reel of 3000	LP2981A-28DBVR	LP6_
				Reel of 250	LP2981A-28DBVT	
		2.9 V		Reel of 3000	LP2981A-29DBVR	LRB_
				Reel of 250	LP2981A-29DBVT	
		3 V		Reel of 3000	LP2981A-30DBVR	LP8_
				Reel of 250	LP2981A-30DBVT	
		3.3 V		Reel of 3000	LP2981A-33DBVR	LPC_
				Reel of 250	LP2981A-33DBVT	
		5 V		Reel of 3000	LP2981A-50DBVR	LPE_
				Reel of 250	LP2981A-50DBVT	
	Standard grade: 1.25% tolerance	2.8 V		Reel of 3000	LP2981-28DBVR	LP5_
				Reel of 250	LP2981-28DBVT	
		2.9 V		Reel of 3000	LP2981-29DBVR	LP3_
				Reel of 250	LP2981-29DBVT	
		3 V		Reel of 3000	LP2981-30DBVR	LP7_
				Reel of 250	LP2981-30DBVT	
		3.3 V		Reel of 3000	LP2981-33DBVR	LPB_
				Reel of 250	LP2981-33DBVT	
		5 V		Reel of 3000	LP2981-50DBVR	LPD_
				Reel of 250	LP2981-50DBVT	

(1) For the most current package and ordering information, see the Package Option Addendum at the end of this document, or see the TI web site at www.ti.com.
(2) Package drawings, thermal data, and symbolization are available at www.ti.com/packaging.
(3) The actual top-side marking has one additional character that designates the wafer fab/assembly site.

Copyright © 2004–2008, Texas Instruments Incorporated

FUNCTIONAL BLOCK DIAGRAM

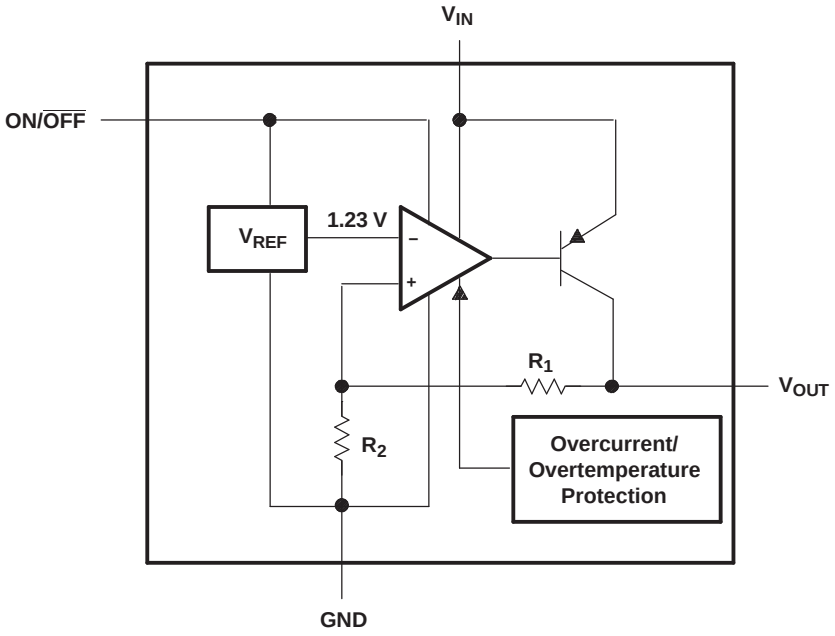

BASIC APPLICATION CIRCUIT

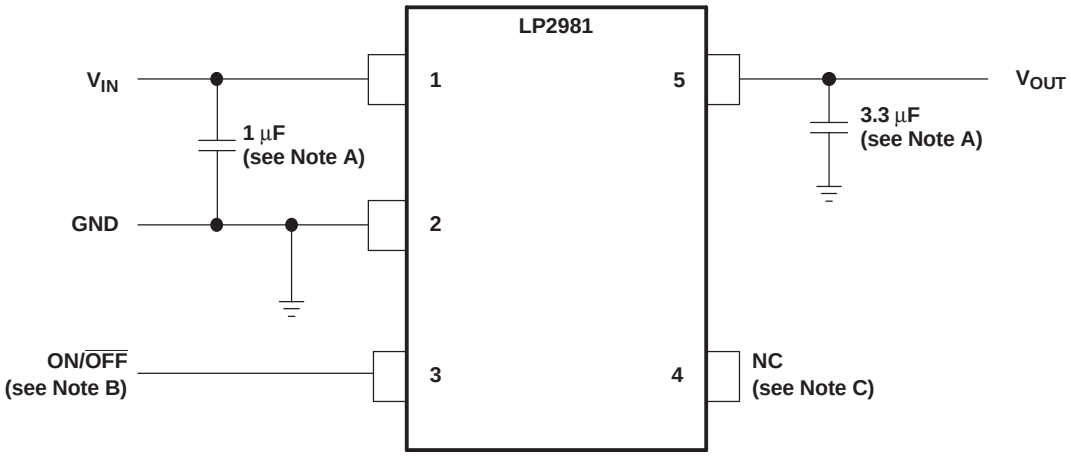

A. Minimum C_{OUT} value for stability (can be increased without limit for improved stability and transient response)

B. ON/$\overline{OFF}$ must be actively terminated. Connect to V_{IN} if shutdown feature is not used.

C. Pin 4 (NC) must be left open. Do not connect anything to this pin.

Figure 1.

Copyright © 2004–2008, Texas Instruments Incorporated

Absolute Maximum Ratings(1)

over virtual junction temperature range (unless otherwise noted)

			MIN	MAX	UNIT
V_{IN}	Continuous input voltage range(2)		–0.3	16	V
$V_{ON/\overline{OFF}}$	ON/$\overline{OFF}$ input voltage range		–0.3	16	V
V_{OUT}	Output voltage range(3)		–0.3	9	V
I_{OUT}	Output current(4)		Internally limited (short-circuit protected)		
θ_{JA}	Package thermal impedance(4)(5)			206	°C/W
T_J	Operating virtual junction temperature			150	°C
T_{stg}	Storage temperature range		–65	150	°C
ESD	Electrostatic discharge protection	Human-Body Model (HBM)		2000	V
		Machine Model (MM)		200	

(1) Stresses beyond those listed under "absolute maximum ratings" may cause permanent damage to the device. These are stress ratings only, and functional operation of the device at these or any other conditions beyond those indicated under "recommended operating conditions" is not implied. Exposure to absolute-maximum-rated conditions for extended periods may affect device reliability.
(2) The PNP pass transistor has a parasitic diode connected between the input and output. This diode normally is reverse biased ($V_{IN} > V_{OUT}$), but will be forward biased if the output voltage exceeds the input voltage by a diode drop (see *Application Information* for more details).
(3) If load is returned to a negative power supply, the output must be diode clamped to GND.
(4) Maximum power dissipation is a function of $T_J(max)$, θ_{JA}, and T_A. The maximum allowable power dissipation at any allowable ambient temperature is $P_D = (T_J(max) – T_A)/\theta_{JA}$. Operating at the absolute maximum T_J of 150°C can affect reliability.
(5) The package thermal impedance is calculated in accordance with JESD 51-7.

Recommended Operating Conditions

		MIN	MAX	UNIT
V_{IN}	Supply input voltage	2.2(1)	16	V
$V_{ON/\overline{OFF}}$	ON/$\overline{OFF}$ input voltage	0	V_{IN}	V
$V_{IN} – V_{OUT}$	Input-output differential	0.7	11	V
I_{OUT}	Output current		100	mA
T_J	Virtual junction temperature	–40	125	°C

(1) Minimum V_{IN} of 2.2 V is needed for proper biasing of LDO control circuitry.

Copyright © 2004–2008, Texas Instruments Incorporated

Electrical Characteristics

at specified free-air temperature range, $V_{IN} = V_{OUT(NOM)} + 1$ V, $V_{ON/\overline{OFF}} = 2$ V, $C_{IN} = 1$ µF, $I_L = 1$ mA, $C_{OUT} = 4.7$ µF (unless otherwise noted)

PARAMETER		TEST CONDITIONS	T_A	LP2981A-xx			LP2981-xx			UNIT
				MIN	TYP	MAX	MIN	TYP	MAX	
ΔV_{OUT}	Output voltage tolerance	I_L = 1 mA	25°C	–0.75		0.75	–1.25		1.25	%V_{NOM}
		I_L = 1 mA to 100 mA	25°C	–1		1	–2		2	
			–40°C to 125°C	–2.5		2.5	–3.5		3.5	
$\Delta V_{OUT}/\Delta V_{IN}$	Output voltage line regulation	V_{IN} = ($V_{OUT(NOM)}$ + 1 V) to 16 V	25°C		0.007	0.014		0.007	0.014	%/V
			–40°C to 125°C			0.032			0.032	
$V_{IN} – V_{OUT}$	Dropout voltage(1)	I_L = 0	25°C		1	3		1	3	mV
			–40°C to 125°C			5			5	
		I_L = 1 mA	25°C		7	10		7	10	
			–40°C to 125°C			15			15	
		I_L = 25 mA	25°C		70	100		70	100	
			–40°C to 125°C			150			150	
		I_L = 100 mA	25°C		200	250		200	250	
			–40°C to 125°C			375			375	
I_{GND}	Ground pin current	I_L = 0	25°C		65	95		65	95	µA
			–40°C to 125°C			125			125	
		I_L = 1 mA	25°C		80	110		80	110	
			–40°C to 125°C			170			170	
		I_L = 25 mA	25°C		200	300		200	300	
			–40°C to 125°C			550			550	
		I_L = 100 mA	25°C		600	1000		600	1000	
			–40°C to 125°C			1700			1700	
		$V_{ON/\overline{OFF}}$ < 0.3 V (OFF)	25°C		0.01	0.8		0.01	0.8	
		$V_{ON/\overline{OFF}}$ < 0.15 V (OFF)	–40°C to 105°C		0.05	2		0.05	2	
			–40°C to 125°C			5			5	
$V_{ON/\overline{OFF}}$	ON/$\overline{OFF}$ input voltage(2)	High = O/P ON	25°C		1.4			1.4		V
			–40°C to 125°C	1.6			1.6			
		Low = O/P OFF	25°C		0.5			0.5		
			–40°C to 125°C			0.15			0.15	
$I_{ON/\overline{OFF}}$	ON/$\overline{OFF}$ input current	$V_{ON/\overline{OFF}}$ = 0	25°C		0.01			0.01		µA
			–40°C to 125°C			–1			–1	
		$V_{ON/\overline{OFF}}$ = 5 V	25°C		5			5		
			–40°C to 125°C			15			15	
$I_{OUT(PK)}$	Peak output current	V_{OUT} ≥ $V_{OUT(NOM)}$ – 5%	25°C	150	400			400		mA
V_n	Output noise voltage (RMS)	BW = 300 Hz to 50 kHz, C_{OUT} = 10 µF	25°C		160			160		µV
$\Delta V_{OUT}/\Delta V_{IN}$	Ripple rejection	f = 1 kHz, C_{OUT} = 10 µF	25°C		63			63		dB
$I_{OUT(MAX)}$	Short-circuit current	R_L = 0 (steady state)	25°C		150			150		mA

(1) Dropout voltage is defined as the input-to-output differential at which the output voltage drops 100 mV below the value measured with a 1-V differential. This dropout specification does not apply to the 1.8-V option, as the minimum V_{IN} = 2.2 V must be observed for proper biasing of LDO control circuitry.

(2) The ON/$\overline{OFF}$ input must be actively terminated. Connect to V_{IN} if this function is not used (see *Application Information*).

Copyright © 2004–2008, Texas Instruments Incorporated

APPLICATION INFORMATION

Capacitors

Input Capacitor (C_{in})

A minimum value of 1 µF (over the entire operating temperature range) is required at the input of the LP2981. In addition, this input capacitor should be located within 1 cm of the input pin and connected to a clean analog ground. There is no Equivalent Series Resistance (ESR) requirement for this capacitor, and the capacitance can be increased without limit. A good quality ceramic or tantalum capacitor can be used.

Output Capacitor (C_{out})

As a PNP regulator, the LP2981 requires the output capacitor to meet both a minimum capacitance and ESR value. Required ESR values as a function of load current are provided for various output voltages, load currents, and capacitances (see Figure 2 through Figure 5).

- Minimum C_{out}: 3.3 µF (can be increased without limit to improve transient response stability margin)
- ESR range: see Figure 2 through Figure 5

It is critical that both the minimum capacitance and ESR requirement be met over the entire operating temperature range. Depending on the type of capacitor used, both of these parameters can vary significantly with temperature (see capacitor characteristics section).

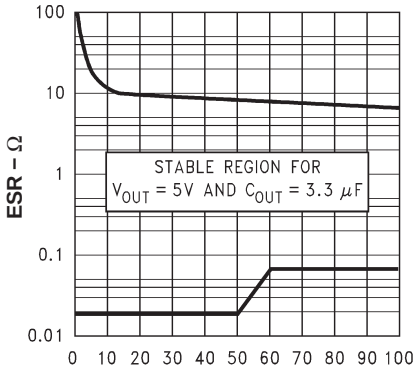

Figure 2. 5-V/3.3-µF ESR Curves

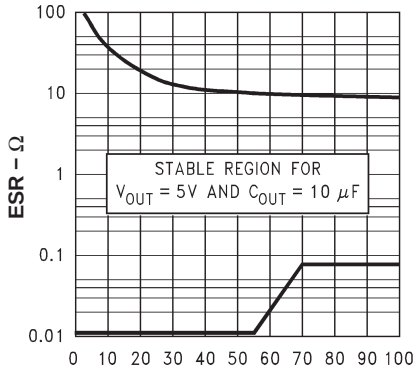

Figure 3. 5-V/10-µF ESR Curves

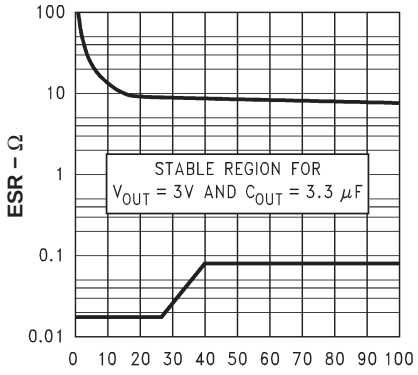

Figure 4. 3-V/3.3-µF ESR Curves

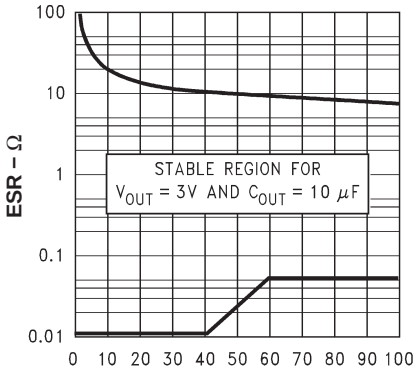

Figure 5. 3-V/10-µF ESR Curves

Copyright © 2004–2008, Texas Instruments Incorporated

Capacitor Characteristics

Ceramics

Due to their very low ESR values, ceramic capacitors are not suitable for use as the output capacitor. For instance, a typical 2.2-μF ceramic capacitor has an ESR in the range of 10 mΩ to 20 mΩ and, thus, easily can fall out of minimum ESR requirements under certain operating conditions.

If a ceramic capacitor is used at the output, a 1-Ω resistor should be placed in series with the capacitor to raise the ESR seen by the regulator.

Tantalum

Solid tantalum capacitors are optimal choices for the LP2981, but they still must meet the minimum ESR requirement. Note that the ESR of a tantalum capacitor increases as temperature drops, as much as doubling from 25°C to –40°C. Thus, ESR margins must be maintained over the temperature range to prevent regulator instability. For operation at very low temperatures, paralleling a tantalum capacitor with a ceramic one keeps the combined ESR from increasing near the upper limit of the ESR curve.

Aluminum

Aluminum capacitors can be used, but use with the LP2981 is impractical due to their large physical dimensions. They also must meet the ESR requirements over the full temperature range. In this regard, aluminium capacitors are at a big disadvantage due to their sharp ESR increase as temperature drops. For example, over a temperature drop from 20°C to –40°C, the ESR of an aluminum electrolytic capacitor can increase by a factor of 50. In addition, some of the electrolytes used in these capacitors can freeze at –25°C, making the capacitor nonoperational.

ON/$\overline{\text{OFF}}$ Operation

The LP2981 allows for a shutdown mode via the ON/$\overline{\text{OFF}}$ pin. If the shutdown feature is not used, ON/$\overline{\text{OFF}}$ should be connected to the input to ensure that the regulator is on at all times. To drive ON/$\overline{\text{OFF}}$:

- A LOW (≤0.3 V) turns the regulator OFF; a HIGH (≥1.6 V) turns it ON.
- Use either a totem-pole output or an open-collector output with a pullup resistor tied to V_{IN} (or another logic supply). The HIGH signal can exceed V_{IN}, but must not exceed the absolute maximum ratings of 20 V for the ON/$\overline{\text{OFF}}$ pin.
- Apply a signal with a slew rate of ≥40 mV/μs. A slow slew rate can cause the shutdown function to operate incorrectly.

Copyright © 2004–2008, Texas Instruments Incorporated

Reverse Input-Output Voltage

An inherent diode is present across the PNP pass element of the LP2981.

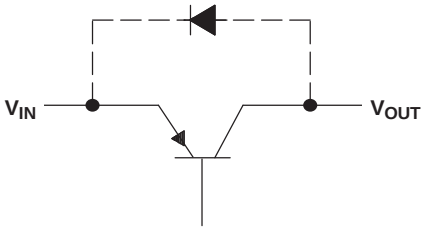

With the anode connected to the output, this diode is reverse biased during normal operation, since the input voltage is higher than the output. However, if the output is pulled one V_{BE} higher than the input, or if the input is abruptly stepped below the output, this diode is forward biased and can cause a parasitic silicon-controlled rectifier (SCR) to latch, resulting in current flowing from the output to the input (values in excess of 100 mA can cause damage). Thus, to prevent possible damage to the regulator in any application where the output may be pulled above the input, an external Schottky diode must be connected between the output and input. With the anode on output, this Schottky limits the reverse voltage across the output and input pins to ~0.3 V, preventing the regulator's internal diode from forward biasing.

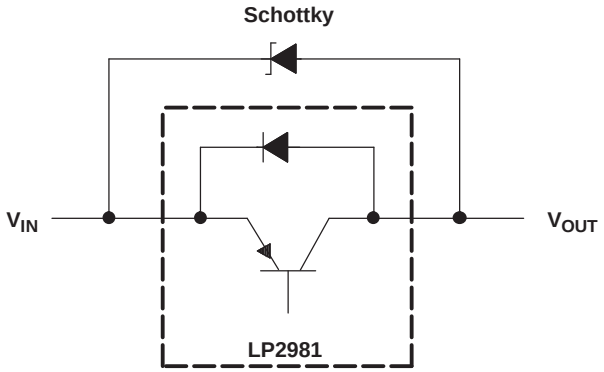

Copyright © 2004–2008, Texas Instruments Incorporated

PACKAGING INFORMATION

Orderable Device	Status (1)	Package Type	Package Drawing	Pins	Package Qty	Eco Plan (2)	Lead/Ball Finish	MSL Peak Temp (3)
LP2981-28DBVR	ACTIVE	SOT-23	DBV	5	3000	Green (RoHS & no Sb/Br)	CU NIPDAU	Level-1-260C-UNLIM
LP2981-28DBVRE4	ACTIVE	SOT-23	DBV	5	3000	Green (RoHS & no Sb/Br)	CU NIPDAU	Level-1-260C-UNLIM
LP2981-28DBVRG4	ACTIVE	SOT-23	DBV	5	3000	Green (RoHS & no Sb/Br)	CU NIPDAU	Level-1-260C-UNLIM
LP2981-28DBVT	ACTIVE	SOT-23	DBV	5	250	Green (RoHS & no Sb/Br)	CU NIPDAU	Level-1-260C-UNLIM
LP2981-28DBVTE4	ACTIVE	SOT-23	DBV	5	250	Green (RoHS & no Sb/Br)	CU NIPDAU	Level-1-260C-UNLIM
LP2981-28DBVTG4	ACTIVE	SOT-23	DBV	5	250	Green (RoHS & no Sb/Br)	CU NIPDAU	Level-1-260C-UNLIM
LP2981-29DBVR	ACTIVE	SOT-23	DBV	5	3000	Green (RoHS & no Sb/Br)	CU NIPDAU	Level-1-260C-UNLIM
LP2981-29DBVRG4	ACTIVE	SOT-23	DBV	5	3000	Green (RoHS & no Sb/Br)	CU NIPDAU	Level-1-260C-UNLIM
LP2981-29DBVT	ACTIVE	SOT-23	DBV	5	250	Green (RoHS & no Sb/Br)	CU NIPDAU	Level-1-260C-UNLIM
LP2981-29DBVTG4	ACTIVE	SOT-23	DBV	5	250	Green (RoHS & no Sb/Br)	CU NIPDAU	Level-1-260C-UNLIM
LP2981-30DBVR	ACTIVE	SOT-23	DBV	5	3000	Green (RoHS & no Sb/Br)	CU NIPDAU	Level-1-260C-UNLIM
LP2981-30DBVRE4	ACTIVE	SOT-23	DBV	5	3000	Green (RoHS & no Sb/Br)	CU NIPDAU	Level-1-260C-UNLIM
LP2981-30DBVRG4	ACTIVE	SOT-23	DBV	5	3000	Green (RoHS & no Sb/Br)	CU NIPDAU	Level-1-260C-UNLIM
LP2981-30DBVT	ACTIVE	SOT-23	DBV	5	250	Green (RoHS & no Sb/Br)	CU NIPDAU	Level-1-260C-UNLIM
LP2981-30DBVTE4	ACTIVE	SOT-23	DBV	5	250	Green (RoHS & no Sb/Br)	CU NIPDAU	Level-1-260C-UNLIM
LP2981-30DBVTG4	ACTIVE	SOT-23	DBV	5	250	Green (RoHS & no Sb/Br)	CU NIPDAU	Level-1-260C-UNLIM
LP2981-33DBVR	ACTIVE	SOT-23	DBV	5	3000	Green (RoHS & no Sb/Br)	CU NIPDAU	Level-1-260C-UNLIM
LP2981-33DBVRE4	ACTIVE	SOT-23	DBV	5	3000	Green (RoHS & no Sb/Br)	CU NIPDAU	Level-1-260C-UNLIM
LP2981-33DBVRG4	ACTIVE	SOT-23	DBV	5	3000	Green (RoHS & no Sb/Br)	CU NIPDAU	Level-1-260C-UNLIM
LP2981-33DBVT	ACTIVE	SOT-23	DBV	5	250	Green (RoHS & no Sb/Br)	CU NIPDAU	Level-1-260C-UNLIM
LP2981-33DBVTE4	ACTIVE	SOT-23	DBV	5	250	Green (RoHS & no Sb/Br)	CU NIPDAU	Level-1-260C-UNLIM
LP2981-33DBVTG4	ACTIVE	SOT-23	DBV	5	250	Green (RoHS & no Sb/Br)	CU NIPDAU	Level-1-260C-UNLIM
LP2981-50DBVR	ACTIVE	SOT-23	DBV	5	3000	Green (RoHS & no Sb/Br)	CU NIPDAU	Level-1-260C-UNLIM
LP2981-50DBVRG4	ACTIVE	SOT-23	DBV	5	3000	Green (RoHS & no Sb/Br)	CU NIPDAU	Level-1-260C-UNLIM
LP2981-50DBVT	ACTIVE	SOT-23	DBV	5	250	Green (RoHS & no Sb/Br)	CU NIPDAU	Level-1-260C-UNLIM

Orderable Device	Status (1)	Package Type	Package Drawing	Pins	Package Qty	Eco Plan (2)	Lead/Ball Finish	MSL Peak Temp (3)
LP2981-50DBVTG4	ACTIVE	SOT-23	DBV	5	250	Green (RoHS & no Sb/Br)	CU NIPDAU	Level-1-260C-UNLIM
LP2981A-28DBVR	ACTIVE	SOT-23	DBV	5	3000	Green (RoHS & no Sb/Br)	CU NIPDAU	Level-1-260C-UNLIM
LP2981A-28DBVRE4	ACTIVE	SOT-23	DBV	5	3000	Green (RoHS & no Sb/Br)	CU NIPDAU	Level-1-260C-UNLIM
LP2981A-28DBVRG4	ACTIVE	SOT-23	DBV	5	3000	Green (RoHS & no Sb/Br)	CU NIPDAU	Level-1-260C-UNLIM
LP2981A-28DBVT	ACTIVE	SOT-23	DBV	5	250	Green (RoHS & no Sb/Br)	CU NIPDAU	Level-1-260C-UNLIM
LP2981A-28DBVTE4	ACTIVE	SOT-23	DBV	5	250	Green (RoHS & no Sb/Br)	CU NIPDAU	Level-1-260C-UNLIM
LP2981A-28DBVTG4	ACTIVE	SOT-23	DBV	5	250	Green (RoHS & no Sb/Br)	CU NIPDAU	Level-1-260C-UNLIM
LP2981A-29DBVR	ACTIVE	SOT-23	DBV	5	3000	Green (RoHS & no Sb/Br)	CU NIPDAU	Level-1-260C-UNLIM
LP2981A-29DBVRG4	ACTIVE	SOT-23	DBV	5	3000	Green (RoHS & no Sb/Br)	CU NIPDAU	Level-1-260C-UNLIM
LP2981A-29DBVT	ACTIVE	SOT-23	DBV	5	250	Green (RoHS & no Sb/Br)	CU NIPDAU	Level-1-260C-UNLIM
LP2981A-29DBVTG4	ACTIVE	SOT-23	DBV	5	250	Green (RoHS & no Sb/Br)	CU NIPDAU	Level-1-260C-UNLIM
LP2981A-30DBVR	ACTIVE	SOT-23	DBV	5	3000	Green (RoHS & no Sb/Br)	CU NIPDAU	Level-1-260C-UNLIM
LP2981A-30DBVRE4	ACTIVE	SOT-23	DBV	5	3000	Green (RoHS & no Sb/Br)	CU NIPDAU	Level-1-260C-UNLIM
LP2981A-30DBVRG4	ACTIVE	SOT-23	DBV	5	3000	Green (RoHS & no Sb/Br)	CU NIPDAU	Level-1-260C-UNLIM
LP2981A-30DBVT	ACTIVE	SOT-23	DBV	5	250	Green (RoHS & no Sb/Br)	CU NIPDAU	Level-1-260C-UNLIM
LP2981A-30DBVTE4	ACTIVE	SOT-23	DBV	5	250	Green (RoHS & no Sb/Br)	CU NIPDAU	Level-1-260C-UNLIM
LP2981A-30DBVTG4	ACTIVE	SOT-23	DBV	5	250	Green (RoHS & no Sb/Br)	CU NIPDAU	Level-1-260C-UNLIM
LP2981A-33DBVR	ACTIVE	SOT-23	DBV	5	3000	Green (RoHS & no Sb/Br)	CU NIPDAU	Level-1-260C-UNLIM
LP2981A-33DBVRE4	ACTIVE	SOT-23	DBV	5	3000	Green (RoHS & no Sb/Br)	CU NIPDAU	Level-1-260C-UNLIM
LP2981A-33DBVRG4	ACTIVE	SOT-23	DBV	5	3000	Green (RoHS & no Sb/Br)	CU NIPDAU	Level-1-260C-UNLIM
LP2981A-33DBVT	ACTIVE	SOT-23	DBV	5	250	Green (RoHS & no Sb/Br)	CU NIPDAU	Level-1-260C-UNLIM
LP2981A-33DBVTE4	ACTIVE	SOT-23	DBV	5	250	Green (RoHS & no Sb/Br)	CU NIPDAU	Level-1-260C-UNLIM
LP2981A-33DBVTG4	ACTIVE	SOT-23	DBV	5	250	Green (RoHS & no Sb/Br)	CU NIPDAU	Level-1-260C-UNLIM
LP2981A-50DBVR	ACTIVE	SOT-23	DBV	5	3000	Green (RoHS & no Sb/Br)	CU NIPDAU	Level-1-260C-UNLIM
LP2981A-50DBVRG4	ACTIVE	SOT-23	DBV	5	3000	Green (RoHS & no Sb/Br)	CU NIPDAU	Level-1-260C-UNLIM
LP2981A-50DBVT	ACTIVE	SOT-23	DBV	5	250	Green (RoHS & no Sb/Br)	CU NIPDAU	Level-1-260C-UNLIM

Orderable Device	Status (1)	Package Type	Package Drawing	Pins	Package Qty	Eco Plan (2)	Lead/Ball Finish	MSL Peak Temp (3)
LP2981A-50DBVTG4	ACTIVE	SOT-23	DBV	5	250	Green (RoHS & no Sb/Br)	CU NIPDAU	Level-1-260C-UNLIM

(1) The marketing status values are defined as follows:
ACTIVE: Product device recommended for new designs.
LIFEBUY: TI has announced that the device will be discontinued, and a lifetime-buy period is in effect.
NRND: Not recommended for new designs. Device is in production to support existing customers, but TI does not recommend using this part in a new design.
PREVIEW: Device has been announced but is not in production. Samples may or may not be available.
OBSOLETE: TI has discontinued the production of the device.

(2) Eco Plan - The planned eco-friendly classification: Pb-Free (RoHS), Pb-Free (RoHS Exempt), or Green (RoHS & no Sb/Br) - please check http://www.ti.com/productcontent for the latest availability information and additional product content details.
TBD: The Pb-Free/Green conversion plan has not been defined.
Pb-Free (RoHS): TI's terms "Lead-Free" or "Pb-Free" mean semiconductor products that are compatible with the current RoHS requirements for all 6 substances, including the requirement that lead not exceed 0.1% by weight in homogeneous materials. Where designed to be soldered at high temperatures, TI Pb-Free products are suitable for use in specified lead-free processes.
Pb-Free (RoHS Exempt): This component has a RoHS exemption for either 1) lead-based flip-chip solder bumps used between the die and package, or 2) lead-based die adhesive used between the die and leadframe. The component is otherwise considered Pb-Free (RoHS compatible) as defined above.
Green (RoHS & no Sb/Br): TI defines "Green" to mean Pb-Free (RoHS compatible), and free of Bromine (Br) and Antimony (Sb) based flame retardants (Br or Sb do not exceed 0.1% by weight in homogeneous material)

(3) MSL, Peak Temp. -- The Moisture Sensitivity Level rating according to the JEDEC industry standard classifications, and peak solder temperature.

Important Information and Disclaimer: The information provided on this page represents TI's knowledge and belief as of the date that it is provided. TI bases its knowledge and belief on information provided by third parties, and makes no representation or warranty as to the accuracy of such information. Efforts are underway to better integrate information from third parties. TI has taken and continues to take reasonable steps to provide representative and accurate information but may not have conducted destructive testing or chemical analysis on incoming materials and chemicals. TI and TI suppliers consider certain information to be proprietary, and thus CAS numbers and other limited information may not be available for release.

In no event shall TI's liability arising out of such information exceed the total purchase price of the TI part(s) at issue in this document sold by TI to Customer on an annual basis.

TAPE AND REEL INFORMATION

REEL DIMENSIONS

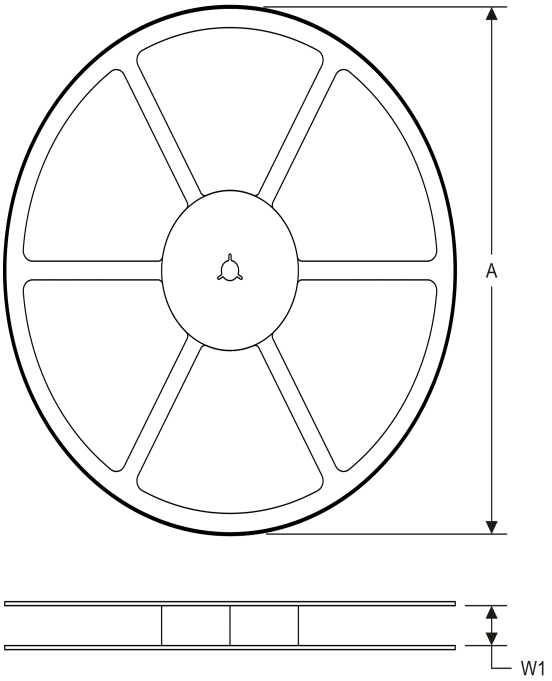

TAPE DIMENSIONS

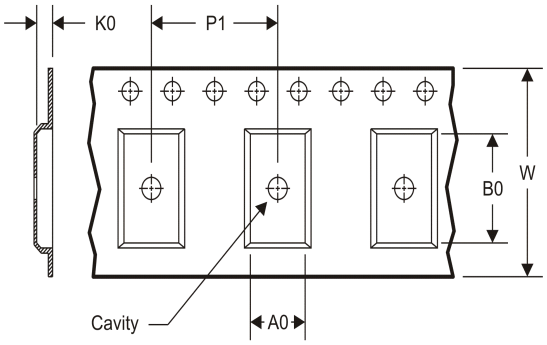

A0	Dimension designed to accommodate the component width
B0	Dimension designed to accommodate the component length
K0	Dimension designed to accommodate the component thickness
W	Overall width of the carrier tape
P1	Pitch between successive cavity centers

TAPE AND REEL INFORMATION

*All dimensions are nominal

Device	Package Type	Package Drawing	Pins	SPQ	Reel Diameter (mm)	Reel Width W1 (mm)	A0 (mm)	B0 (mm)	K0 (mm)	P1 (mm)	W (mm)	Pin1 Quadrant
LP2981-28DBVR	SOT-23	DBV	5	3000	180.0	9.2	3.17	3.23	1.37	4.0	8.0	Q3
LP2981-28DBVR	SOT-23	DBV	5	3000	178.0	9.0	3.23	3.17	1.37	4.0	8.0	Q3
LP2981-28DBVT	SOT-23	DBV	5	250	180.0	9.2	3.17	3.23	1.37	4.0	8.0	Q3
LP2981-29DBVR	SOT-23	DBV	5	3000	180.0	9.2	3.17	3.23	1.37	4.0	8.0	Q3
LP2981-29DBVT	SOT-23	DBV	5	250	180.0	9.2	3.17	3.23	1.37	4.0	8.0	Q3
LP2981-30DBVR	SOT-23	DBV	5	3000	180.0	9.2	3.17	3.23	1.37	4.0	8.0	Q3
LP2981-30DBVR	SOT-23	DBV	5	3000	178.0	9.0	3.23	3.17	1.37	4.0	8.0	Q3
LP2981-30DBVT	SOT-23	DBV	5	250	180.0	9.2	3.17	3.23	1.37	4.0	8.0	Q3
LP2981-33DBVR	SOT-23	DBV	5	3000	178.0	9.0	3.23	3.17	1.37	4.0	8.0	Q3
LP2981-33DBVR	SOT-23	DBV	5	3000	180.0	9.2	3.17	3.23	1.37	4.0	8.0	Q3
LP2981-33DBVT	SOT-23	DBV	5	250	180.0	9.2	3.17	3.23	1.37	4.0	8.0	Q3
LP2981-50DBVR	SOT-23	DBV	5	3000	180.0	9.2	3.17	3.23	1.37	4.0	8.0	Q3
LP2981-50DBVT	SOT-23	DBV	5	250	180.0	9.2	3.17	3.23	1.37	4.0	8.0	Q3
LP2981A-28DBVR	SOT-23	DBV	5	3000	178.0	9.0	3.23	3.17	1.37	4.0	8.0	Q3
LP2981A-28DBVR	SOT-23	DBV	5	3000	180.0	9.2	3.17	3.23	1.37	4.0	8.0	Q3
LP2981A-28DBVT	SOT-23	DBV	5	250	180.0	9.2	3.17	3.23	1.37	4.0	8.0	Q3
LP2981A-29DBVR	SOT-23	DBV	5	3000	180.0	9.2	3.17	3.23	1.37	4.0	8.0	Q3
LP2981A-29DBVT	SOT-23	DBV	5	250	180.0	9.2	3.17	3.23	1.37	4.0	8.0	Q3

Device	Package Type	Package Drawing	Pins	SPQ	Reel Diameter (mm)	Reel Width W1 (mm)	A0 (mm)	B0 (mm)	K0 (mm)	P1 (mm)	W (mm)	Pin1 Quadrant
LP2981A-30DBVR	SOT-23	DBV	5	3000	180.0	9.2	3.17	3.23	1.37	4.0	8.0	Q3
LP2981A-30DBVT	SOT-23	DBV	5	250	180.0	9.2	3.17	3.23	1.37	4.0	8.0	Q3
LP2981A-33DBVR	SOT-23	DBV	5	3000	180.0	9.2	3.17	3.23	1.37	4.0	8.0	Q3
LP2981A-33DBVT	SOT-23	DBV	5	250	180.0	9.2	3.17	3.23	1.37	4.0	8.0	Q3
LP2981A-50DBVR	SOT-23	DBV	5	3000	180.0	9.2	3.17	3.23	1.37	4.0	8.0	Q3
LP2981A-50DBVT	SOT-23	DBV	5	250	180.0	9.2	3.17	3.23	1.37	4.0	8.0	Q3

TAPE AND REEL BOX DIMENSIONS

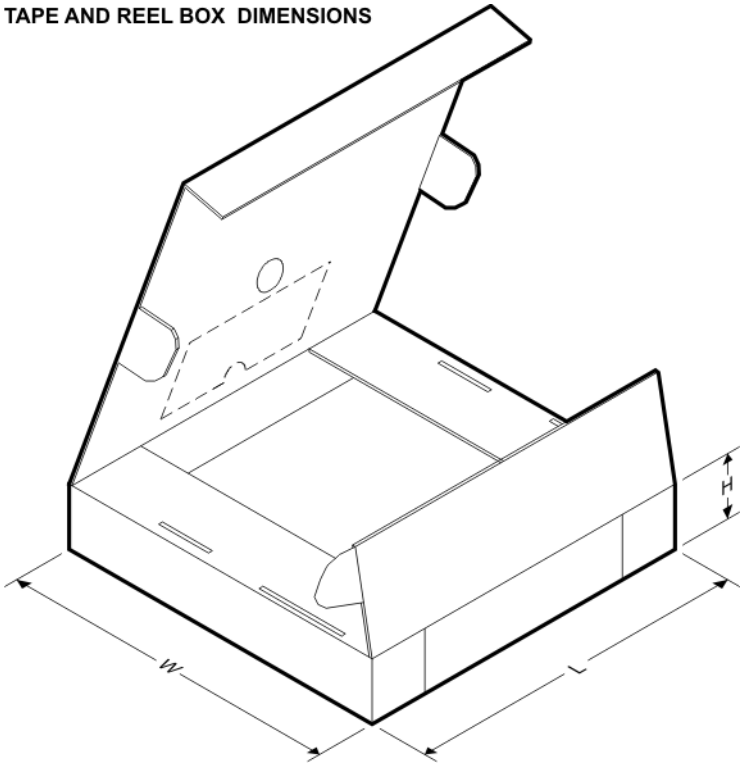

*All dimensions are nominal

Device	Package Type	Package Drawing	Pins	SPQ	Length (mm)	Width (mm)	Height (mm)
LP2981-28DBVR	SOT-23	DBV	5	3000	205.0	200.0	33.0
LP2981-28DBVR	SOT-23	DBV	5	3000	180.0	180.0	18.0
LP2981-28DBVT	SOT-23	DBV	5	250	205.0	200.0	33.0
LP2981-29DBVR	SOT-23	DBV	5	3000	205.0	200.0	33.0
LP2981-29DBVT	SOT-23	DBV	5	250	205.0	200.0	33.0
LP2981-30DBVR	SOT-23	DBV	5	3000	205.0	200.0	33.0
LP2981-30DBVR	SOT-23	DBV	5	3000	180.0	180.0	18.0
LP2981-30DBVT	SOT-23	DBV	5	250	205.0	200.0	33.0
LP2981-33DBVR	SOT-23	DBV	5	3000	180.0	180.0	18.0
LP2981-33DBVR	SOT-23	DBV	5	3000	205.0	200.0	33.0
LP2981-33DBVT	SOT-23	DBV	5	250	205.0	200.0	33.0

Device	Package Type	Package Drawing	Pins	SPQ	Length (mm)	Width (mm)	Height (mm)
LP2981-50DBVR	SOT-23	DBV	5	3000	205.0	200.0	33.0
LP2981-50DBVT	SOT-23	DBV	5	250	205.0	200.0	33.0
LP2981A-28DBVR	SOT-23	DBV	5	3000	180.0	180.0	18.0
LP2981A-28DBVR	SOT-23	DBV	5	3000	205.0	200.0	33.0
LP2981A-28DBVT	SOT-23	DBV	5	250	205.0	200.0	33.0
LP2981A-29DBVR	SOT-23	DBV	5	3000	205.0	200.0	33.0
LP2981A-29DBVT	SOT-23	DBV	5	250	205.0	200.0	33.0
LP2981A-30DBVR	SOT-23	DBV	5	3000	205.0	200.0	33.0
LP2981A-30DBVT	SOT-23	DBV	5	250	205.0	200.0	33.0
LP2981A-33DBVR	SOT-23	DBV	5	3000	205.0	200.0	33.0
LP2981A-33DBVT	SOT-23	DBV	5	250	205.0	200.0	33.0
LP2981A-50DBVR	SOT-23	DBV	5	3000	205.0	200.0	33.0
LP2981A-50DBVT	SOT-23	DBV	5	250	205.0	200.0	33.0

DBV (R–PDSO–G5) PLASTIC SMALL–OUTLINE PACKAGE

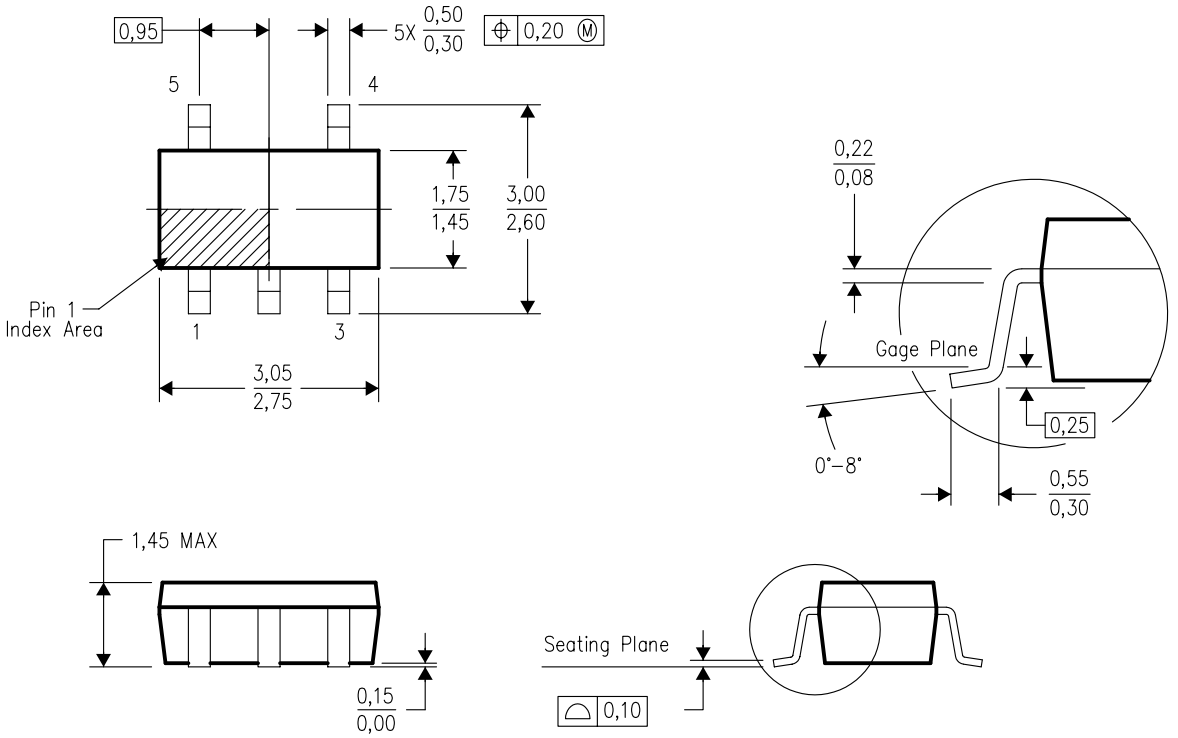

4073253–4/K 03/2006

NOTES:
A. All linear dimensions are in millimeters.
B. This drawing is subject to change without notice.
C. Body dimensions do not include mold flash or protrusion. Mold flash and protrusion shall not exceed 0.15 per side.
D. Falls within JEDEC MO–178 Variation AA.

DBV (R–PDSO–G5) PLASTIC SMALL OUTLINE

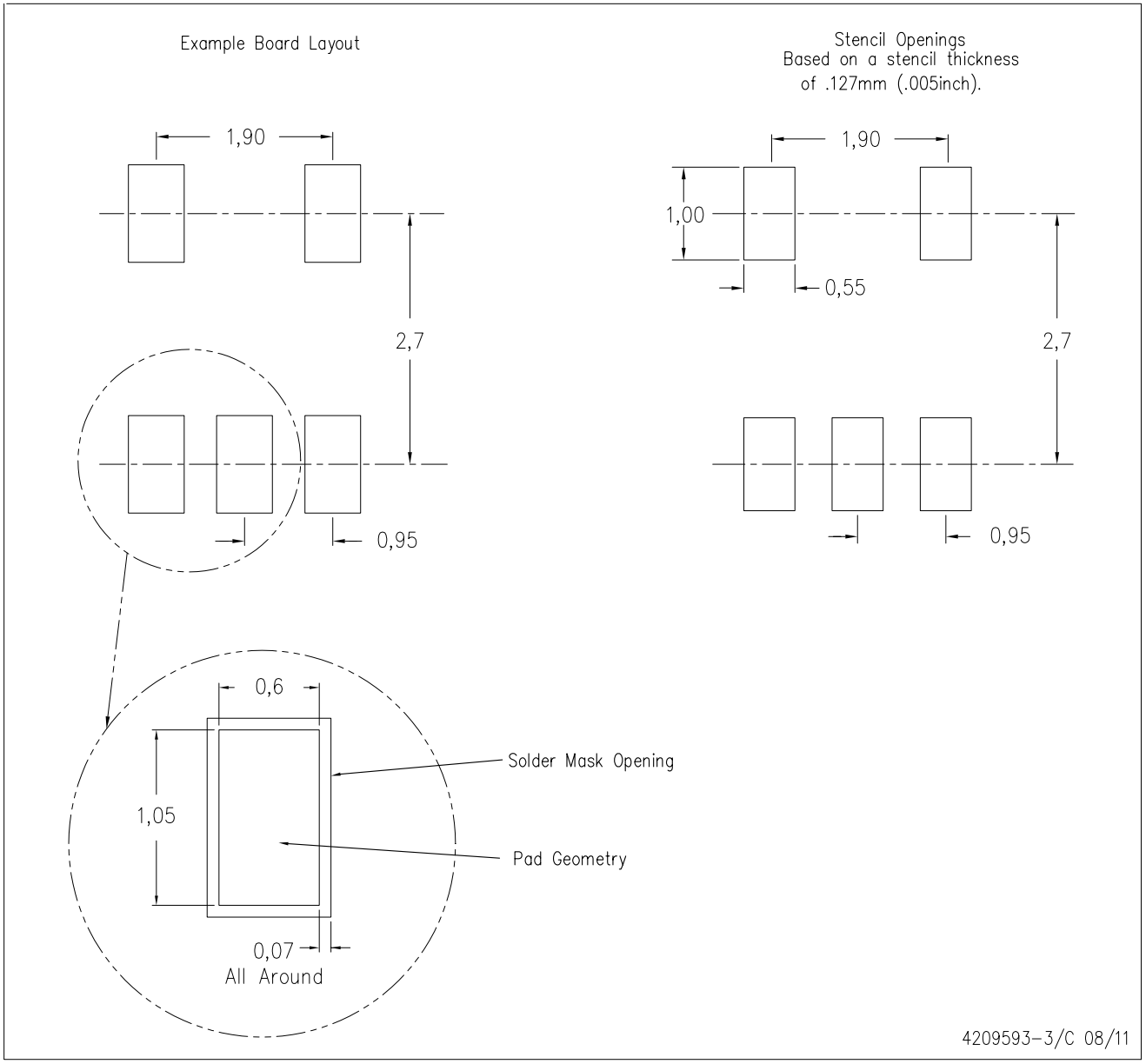

NOTES:
A. All linear dimensions are in millimeters.
B. This drawing is subject to change without notice.
C. Customers should place a note on the circuit board fabrication drawing not to alter the center solder mask defined pad.
D. Publication IPC–7351 is recommended for alternate designs.
E. Laser cutting apertures with trapezoidal walls and also rounding corners will offer better paste release. Customers should contact their board assembly site for stencil design recommendations. Example stencil design based on a 50% volumetric metal load solder paste. Refer to IPC–7525 for other stencil recommendations.

IMPORTANT NOTICE

Texas Instruments Incorporated and its subsidiaries (TI) reserve the right to make corrections, modifications, enhancements, improvements, and other changes to its products and services at any time and to discontinue any product or service without notice. Customers should obtain the latest relevant information before placing orders and should verify that such information is current and complete. All products are sold subject to TI's terms and conditions of sale supplied at the time of order acknowledgment.

TI warrants performance of its hardware products to the specifications applicable at the time of sale in accordance with TI's standard warranty. Testing and other quality control techniques are used to the extent TI deems necessary to support this warranty. Except where mandated by government requirements, testing of all parameters of each product is not necessarily performed.

TI assumes no liability for applications assistance or customer product design. Customers are responsible for their products and applications using TI components. To minimize the risks associated with customer products and applications, customers should provide adequate design and operating safeguards.

TI does not warrant or represent that any license, either express or implied, is granted under any TI patent right, copyright, mask work right, or other TI intellectual property right relating to any combination, machine, or process in which TI products or services are used. Information published by TI regarding third-party products or services does not constitute a license from TI to use such products or services or a warranty or endorsement thereof. Use of such information may require a license from a third party under the patents or other intellectual property of the third party, or a license from TI under the patents or other intellectual property of TI.

Reproduction of TI information in TI data books or data sheets is permissible only if reproduction is without alteration and is accompanied by all associated warranties, conditions, limitations, and notices. Reproduction of this information with alteration is an unfair and deceptive business practice. TI is not responsible or liable for such altered documentation. Information of third parties may be subject to additional restrictions.

Resale of TI products or services with statements different from or beyond the parameters stated by TI for that product or service voids all express and any implied warranties for the associated TI product or service and is an unfair and deceptive business practice. TI is not responsible or liable for any such statements.

TI products are not authorized for use in safety-critical applications (such as life support) where a failure of the TI product would reasonably be expected to cause severe personal injury or death, unless officers of the parties have executed an agreement specifically governing such use. Buyers represent that they have all necessary expertise in the safety and regulatory ramifications of their applications, and acknowledge and agree that they are solely responsible for all legal, regulatory and safety-related requirements concerning their products and any use of TI products in such safety-critical applications, notwithstanding any applications-related information or support that may be provided by TI. Further, Buyers must fully indemnify TI and its representatives against any damages arising out of the use of TI products in such safety-critical applications.

TI products are neither designed nor intended for use in military/aerospace applications or environments unless the TI products are specifically designated by TI as military-grade or "enhanced plastic." Only products designated by TI as military-grade meet military specifications. Buyers acknowledge and agree that any such use of TI products which TI has not designated as military-grade is solely at the Buyer's risk, and that they are solely responsible for compliance with all legal and regulatory requirements in connection with such use.

TI products are neither designed nor intended for use in automotive applications or environments unless the specific TI products are designated by TI as compliant with ISO/TS 16949 requirements. Buyers acknowledge and agree that, if they use any non-designated products in automotive applications, TI will not be responsible for any failure to meet such requirements.

Following are URLs where you can obtain information on other Texas Instruments products and application solutions:

Products		**Applications**	
Audio	www.ti.com/audio	Communications and Telecom	www.ti.com/communications
Amplifiers	amplifier.ti.com	Computers and Peripherals	www.ti.com/computers
Data Converters	dataconverter.ti.com	Consumer Electronics	www.ti.com/consumer-apps
DLP® Products	www.dlp.com	Energy and Lighting	www.ti.com/energy
DSP	dsp.ti.com	Industrial	www.ti.com/industrial
Clocks and Timers	www.ti.com/clocks	Medical	www.ti.com/medical
Interface	interface.ti.com	Security	www.ti.com/security
Logic	logic.ti.com	Space, Avionics and Defense	www.ti.com/space-avionics-defense
Power Mgmt	power.ti.com	Transportation and Automotive	www.ti.com/automotive
Microcontrollers	microcontroller.ti.com	Video and Imaging	www.ti.com/video
RFID	www.ti-rfid.com		
OMAP Mobile Processors	www.ti.com/omap		
Wireless Connectivity	www.ti.com/wirelessconnectivity		
	TI E2E Community Home Page		e2e.ti.com

Mailing Address: Texas Instruments, Post Office Box 655303, Dallas, Texas 75265
Copyright © 2011, Texas Instruments Incorporated