FEATURES

- **Low Supply Current . . . 85 μA Typ**
- **Low Offset Voltage . . . 2 mV Typ**
- **Low Input Bias Current . . . 2 nA Typ**
- **Input Common Mode to GND**
- **Wide Supply Voltage . . . 3 V < V_{CC} < 32 V**
- **Pin Compatible With LM324**
- **Applications**
  - **LCD Displays**
  - **Portable Instrumentation**
  - **Sensor/Metering Equipment**
  - **Consumer Electronics (MP3 Players, Toys, Etc.)**
  - **Power Supplies**

D, N, OR PW PACKAGE
(TOP VIEW)

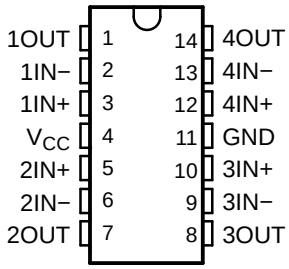

DESCRIPTION/ORDERING INFORMATION

The LP324 and LP2902 are quadruple low-power operational amplifiers especially suited for battery-operated applications. Good input specifications and wide supply-voltage range still are achieved, despite the ultra-low supply current. Single-supply operation is achieved with an input common-mode range that includes GND.

The LP324 and LP2902 are ideal in applications where wide supply voltage and low power are more important than speed and bandwidth. These applications include portable instrumentation, LCD displays, consumer electronics (MP3 players, toys, etc.), and power supplies.

ORDERING INFORMATION

T_A	PACKAGE(1)		ORDERABLE PART NUMBER	TOP-SIDE MARKING
0°C to 70°C	PDIP – N	Tube of 25	LP324N	LP324N
	SOIC – D	Tube of 50	LP324D	LP324
		Reel of 2500	LP324DR	
	TSSOP – PW	Tube of 90	LP324PW	LP324
		Reel of 2000	LP324PWR	
–40°C to 85°C	PDIP – N	Tube of 25	LP2902N	LP2902N
	SOIC – D	Tube of 50	LP2902D	LP2902
		Reel of 2500	LP2902DR	
	TSSOP – PW	Tube of 50	LP2902PW	LP2902
		Reel of 2500	LP2902PWR	

(1) Package drawings, standard packing quantities, thermal data, symbolization, and PCB design guidelines are available at www.ti.com/sc/package.

SYMBOL (EACH AMPLIFIER)

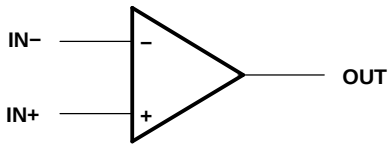

Please be aware that an important notice concerning availability, standard warranty, and use in critical applications of Texas Instruments semiconductor products and disclaimers thereto appears at the end of this data sheet.

PRODUCTION DATA information is current as of publication date. Products conform to specifications per the terms of the Texas Instruments standard warranty. Production processing does not necessarily include testing of all parameters.

Copyright © 2005, Texas Instruments Incorporated

SCHEMATIC (EACH AMPLIFIER)

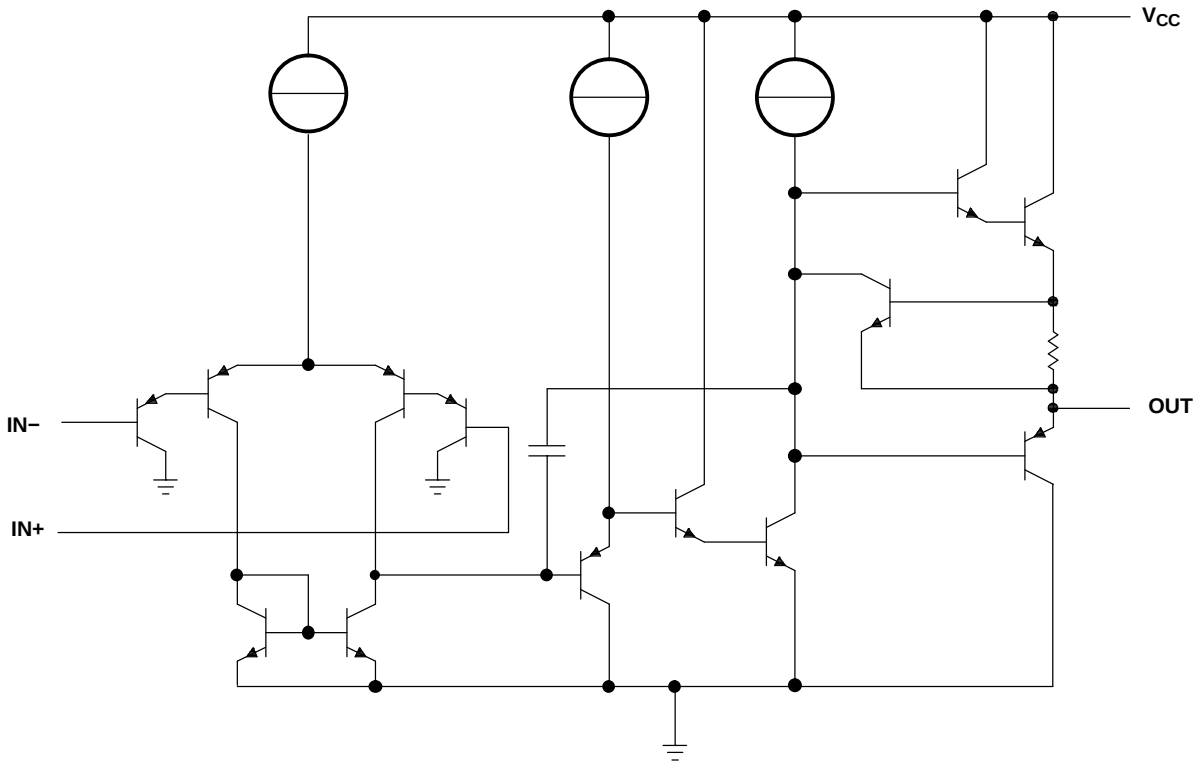

Absolute Maximum Ratings(1)

over operating free-air temperature range (unless otherwise noted)

			MIN	MAX	UNIT
V_{CC}	Supply voltage range(2)			±16 or 32	V
V_{ID}	Differential input voltage(3)			±32	V
V_I	Input voltage (either input)		–0.3	32	V
	Duration of output short circuit (one amplifier) to ground at (or below) T_A = 25°C, V_{CC} ≤ 15 V(4)			Unlimited	
θ_{JA}	Package thermal impedance(5)(6)	D package		86	°C/W
		N package		80	
		PW package		113	
T_J	Operating virtual junction temperature			150	°C
T_{stg}	Storage temperature range		–65	150	°C

(1) Stresses beyond those listed under "absolute maximum ratings" may cause permanent damage to the device. These are stress ratings only, and functional operation of the device at these or any other conditions beyond those indicated under "recommended operating conditions" is not implied. Exposure to absolute-maximum-rated conditions for extended periods may affect device reliability.
(2) All voltage values (except differential voltages and V_{CC} specified for the measurement of I_{OS}) are with respect to the network GND.
(3) Differential voltages are at IN+, with respect to IN–.
(4) Short circuits from outputs to V_{CC} can cause excessive heating and eventual destruction.
(5) Maximum power dissipation is a function of T_J(max), θ_{JA}, and T_A. The maximum allowable power dissipation at any allowable ambient temperature is $P_D = (T_J(max) – T_A)/\theta_{JA}$. Operating at the absolute maximum T_J of 150°C can affect reliability.
(6) The package thermal impedance is calculated in accordance with JESD 51-7.

ESD Protection

TEST CONDITIONS	TYP	UNIT
Human-Body Model	±2	kV

Electrical Characteristics

T_A = 25°C, V_{CC} = 5 V, V_{IC} = V_{CC}/2, R_L = 100 kΩ to GND (unless otherwise noted)

PARAMETER		TEST CONDITIONS(1)	T_A(2)	LP324			LP2902			UNIT
				MIN	TYP(3)	MAX	MIN	TYP(3)	MAX	
V_{IO}	Input offset voltage		25°C		2	4		2	4	mV
			Full range			9			10	
I_{IB}	Input bias current		25°C		2	10		2	20	nA
			Full range			20			40	
I_{IO}	Input offset current		25°C		0.2	2		0.5	4	nA
			Full range			4			8	
A_V	Large-signal voltage gain	R_L = 10 kΩ to GND, V_{CC} = 30 V	25°C	50	100		40	70		V/mV
			Full range	40			30			
CMRR	Common-mode rejection ratio	V_{CC} = 30 V, V_{IC} = 0 V to V_{CC} – 1.5 V	25°C	80	90		80	90		dB
			Full range	75			75			
k_{VSR}	Power-supply rejection ratio	V_{CC} = 5 V to 30 V	25°C	80	90		80	90		V
			Full range	75			75			
I_{CC}	Supply current	R_L = ∞	25°C		85	150		85	150	µA
			Full range			250			275	
V_{OH}	Output voltage swing (high)	I_L = 0.35 mA to GND, V_{IC} = 0 V	25°C	3.4	3.6		3.4	3.6		V
			Full range	V_{CC} – 1.9			V_{CC} – 1.9			
V_{OL}	Output voltage swing (low)	I_L = 0.35 mA from V_{CC}, V_{IC} = 0 V	25°C	0.82	0.7		0.82	0.7		V
			Full range	1			1			
I_O	Output source current	V_O = 3 V, V_{ID} = 1 V	25°C	7	10		7	10		mA
			Full range	4			4			
I_O	Output sink current	V_O = 1.5 V, V_{ID} = –1 V	25°C	4	5		4	5		mA
			Full range	3			3			
		V_O = 1.5 V, V_{ID} = –1 V, V_{IC} = 0 V	25°C	2	4		2	4		
			Full range	1			1			
$I_{OS,GND}$	Output short to GND	V_{ID} = 1 V	25°C		20	35		20	35	mA
			Full range			40			40	
$I_{OS,VCC}$	Output short to V_{CC}	V_{ID} = –1 V	25°C		15	30		15	30	mA
			Full range			45			45	
$\propto V_{IO}$	Input offset voltage drift		25°C		10			10		µV/°C
$\propto I_{IO}$	Input offset current drift		25°C		10			10		pA/°C

(1) For full-range temperature limits: V_{CC} = 3 V to 32 V, V_{ICR} = 0 V to V_{CC} – 1.5 V (unless otherwise noted)
(2) Full range is 0°C to 70°C for LP324 and –40°C to 85°C for LP2902.
(3) All typical values are at T_A = 25°C.

Operating Conditions

V_{CC} = ±15 V, T_A = 25°C

PARAMETER		TYP	UNIT
GBW	Gain bandwidth product	100	kHz
SR	Slew rate	50	V/ms

PACKAGING INFORMATION

Orderable Device	Status [1]	Package Type	Package Drawing	Pins	Package Qty	Eco Plan [2]	Lead/Ball Finish	MSL Peak Temp [3]
LP2902D	ACTIVE	SOIC	D	14	50	Green (RoHS & no Sb/Br)	CU NIPDAU	Level-1-260C-UNLIM
LP2902DE4	ACTIVE	SOIC	D	14	50	Green (RoHS & no Sb/Br)	CU NIPDAU	Level-1-260C-UNLIM
LP2902DR	ACTIVE	SOIC	D	14	2500	Green (RoHS & no Sb/Br)	CU NIPDAU	Level-1-260C-UNLIM
LP2902DRE4	ACTIVE	SOIC	D	14	2500	Green (RoHS & no Sb/Br)	CU NIPDAU	Level-1-260C-UNLIM
LP2902N	ACTIVE	PDIP	N	14	25	Pb-Free (RoHS)	CU NIPDAU	N / A for Pkg Type
LP2902NE4	ACTIVE	PDIP	N	14	25	Pb-Free (RoHS)	CU NIPDAU	N / A for Pkg Type
LP2902PW	ACTIVE	TSSOP	PW	14	90	Green (RoHS & no Sb/Br)	CU NIPDAU	Level-1-260C-UNLIM
LP2902PWE4	ACTIVE	TSSOP	PW	14	90	Green (RoHS & no Sb/Br)	CU NIPDAU	Level-1-260C-UNLIM
LP2902PWR	ACTIVE	TSSOP	PW	14	2000	Green (RoHS & no Sb/Br)	CU NIPDAU	Level-1-260C-UNLIM
LP2902PWRE4	ACTIVE	TSSOP	PW	14	2000	Green (RoHS & no Sb/Br)	CU NIPDAU	Level-1-260C-UNLIM
LP324D	ACTIVE	SOIC	D	14	50	Green (RoHS & no Sb/Br)	CU NIPDAU	Level-1-260C-UNLIM
LP324DE4	ACTIVE	SOIC	D	14	50	Green (RoHS & no Sb/Br)	CU NIPDAU	Level-1-260C-UNLIM
LP324DR	ACTIVE	SOIC	D	14	2500	Green (RoHS & no Sb/Br)	CU NIPDAU	Level-1-260C-UNLIM
LP324DRE4	ACTIVE	SOIC	D	14	2500	Green (RoHS & no Sb/Br)	CU NIPDAU	Level-1-260C-UNLIM
LP324N	ACTIVE	PDIP	N	14	25	Pb-Free (RoHS)	CU NIPDAU	N / A for Pkg Type
LP324NE4	ACTIVE	PDIP	N	14	25	Pb-Free (RoHS)	CU NIPDAU	N / A for Pkg Type
LP324PW	ACTIVE	TSSOP	PW	14	90	Green (RoHS & no Sb/Br)	CU NIPDAU	Level-1-260C-UNLIM
LP324PWE4	ACTIVE	TSSOP	PW	14	90	Green (RoHS & no Sb/Br)	CU NIPDAU	Level-1-260C-UNLIM
LP324PWR	ACTIVE	TSSOP	PW	14	2000	Green (RoHS & no Sb/Br)	CU NIPDAU	Level-1-260C-UNLIM
LP324PWRE4	ACTIVE	TSSOP	PW	14	2000	Green (RoHS & no Sb/Br)	CU NIPDAU	Level-1-260C-UNLIM

[1] The marketing status values are defined as follows:
ACTIVE: Product device recommended for new designs.
LIFEBUY: TI has announced that the device will be discontinued, and a lifetime-buy period is in effect.
NRND: Not recommended for new designs. Device is in production to support existing customers, but TI does not recommend using this part in a new design.
PREVIEW: Device has been announced but is not in production. Samples may or may not be available.
OBSOLETE: TI has discontinued the production of the device.

[2] Eco Plan - The planned eco-friendly classification: Pb-Free (RoHS), Pb-Free (RoHS Exempt), or Green (RoHS & no Sb/Br) - please check http://www.ti.com/productcontent for the latest availability information and additional product content details.

TBD: The Pb-Free/Green conversion plan has not been defined.
Pb-Free (RoHS): TI's terms "Lead-Free" or "Pb-Free" mean semiconductor products that are compatible with the current RoHS requirements for all 6 substances, including the requirement that lead not exceed 0.1% by weight in homogeneous materials. Where designed to be soldered at high temperatures, TI Pb-Free products are suitable for use in specified lead-free processes.
Pb-Free (RoHS Exempt): This component has a RoHS exemption for either 1) lead-based flip-chip solder bumps used between the die and package, or 2) lead-based die adhesive used between the die and leadframe. The component is otherwise considered Pb-Free (RoHS compatible) as defined above.
Green (RoHS & no Sb/Br): TI defines "Green" to mean Pb-Free (RoHS compatible), and free of Bromine (Br) and Antimony (Sb) based flame retardants (Br or Sb do not exceed 0.1% by weight in homogeneous material)

(3) MSL, Peak Temp. -- The Moisture Sensitivity Level rating according to the JEDEC industry standard classifications, and peak solder temperature.

Important Information and Disclaimer: The information provided on this page represents TI's knowledge and belief as of the date that it is provided. TI bases its knowledge and belief on information provided by third parties, and makes no representation or warranty as to the accuracy of such information. Efforts are underway to better integrate information from third parties. TI has taken and continues to take reasonable steps to provide representative and accurate information but may not have conducted destructive testing or chemical analysis on incoming materials and chemicals. TI and TI suppliers consider certain information to be proprietary, and thus CAS numbers and other limited information may not be available for release.

In no event shall TI's liability arising out of such information exceed the total purchase price of the TI part(s) at issue in this document sold by TI to Customer on an annual basis.

N (R–PDIP–T**)

PLASTIC DUAL–IN–LINE PACKAGE

16 PINS SHOWN

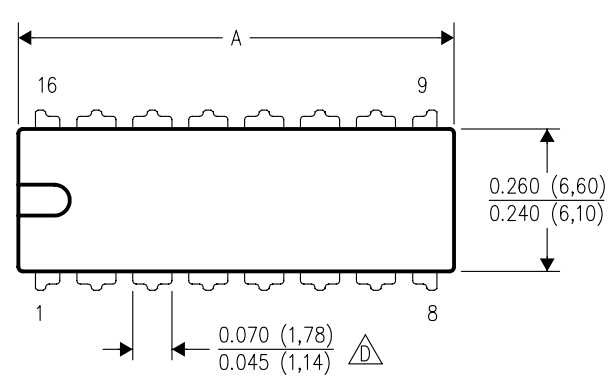

DIM \ PINS **	14	16	18	20
A MAX	0.775 (19,69)	0.775 (19,69)	0.920 (23,37)	1.060 (26,92)
A MIN	0.745 (18,92)	0.745 (18,92)	0.850 (21,59)	0.940 (23,88)
MS–001 VARIATION (C)	AA	BB	AC	AD

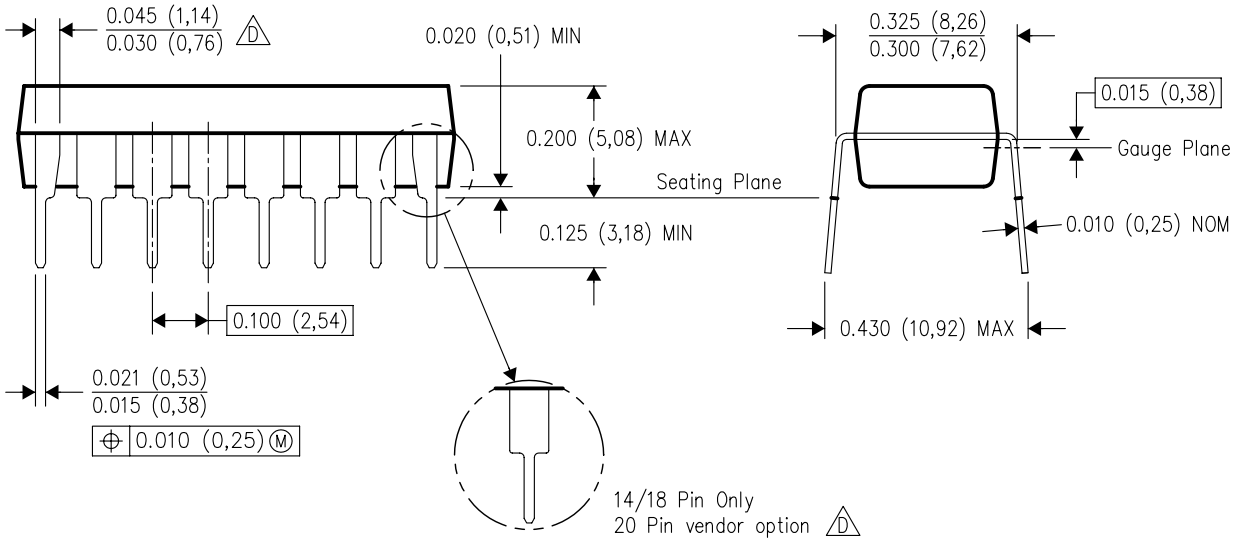

4040049/E 12/2002

NOTES:
A. All linear dimensions are in inches (millimeters).
B. This drawing is subject to change without notice.
C. Falls within JEDEC MS–001, except 18 and 20 pin minimum body length (Dim A).
D. The 20 pin end lead shoulder width is a vendor option, either half or full width.

D (R–PDSO–G14) PLASTIC SMALL–OUTLINE PACKAGE

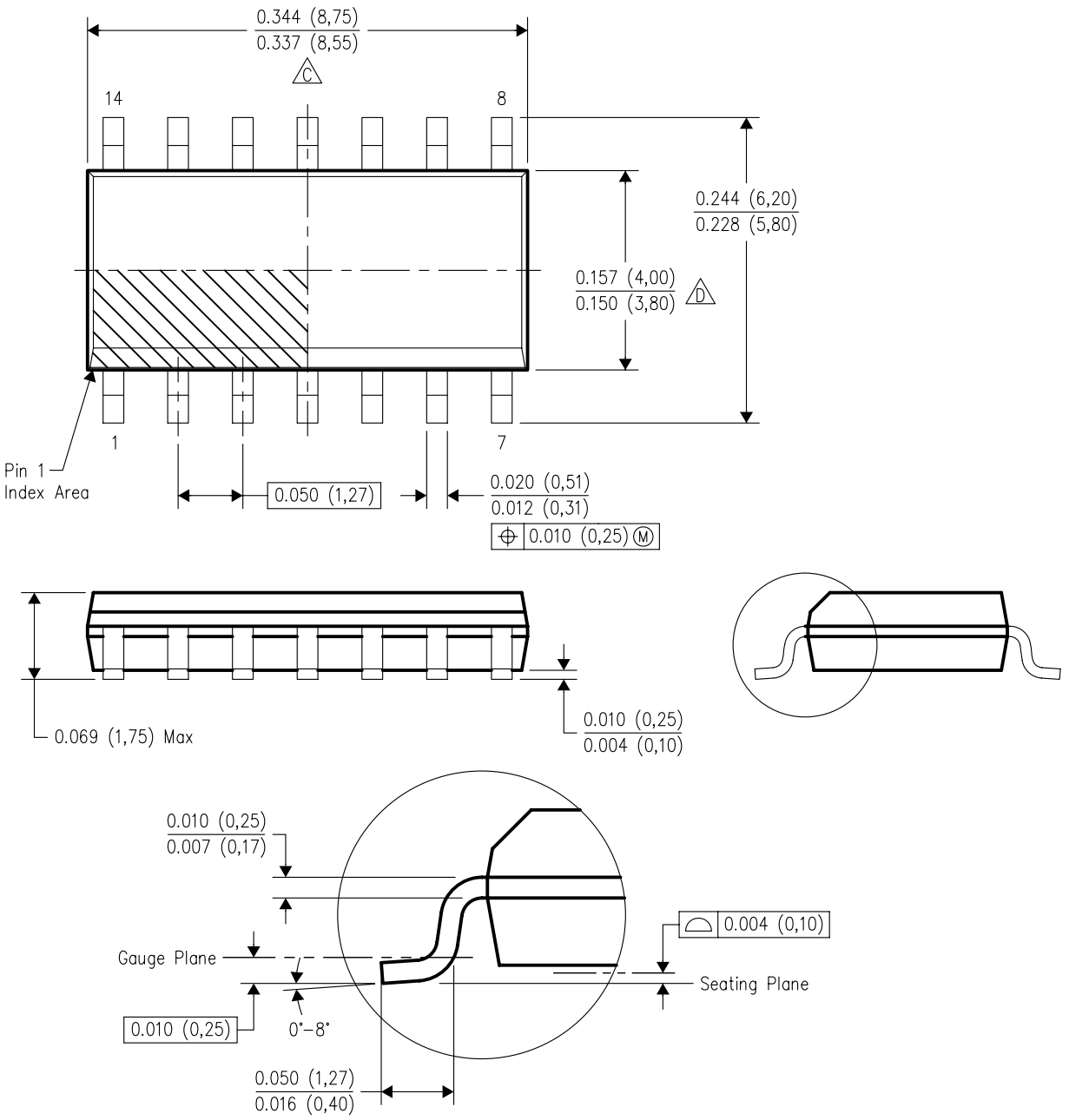

NOTES:
A. All linear dimensions are in inches (millimeters).
B. This drawing is subject to change without notice.
C. Body length does not include mold flash, protrusions, or gate burrs. Mold flash, protrusions, or gate burrs shall not exceed .006 (0,15) per end.
D. Body width does not include interlead flash. Interlead flash shall not exceed .017 (0,43) per side.
E. Reference JEDEC MS–012 variation AB.

PW (R-PDSO-G)** **PLASTIC SMALL-OUTLINE PACKAGE**

14 PINS SHOWN

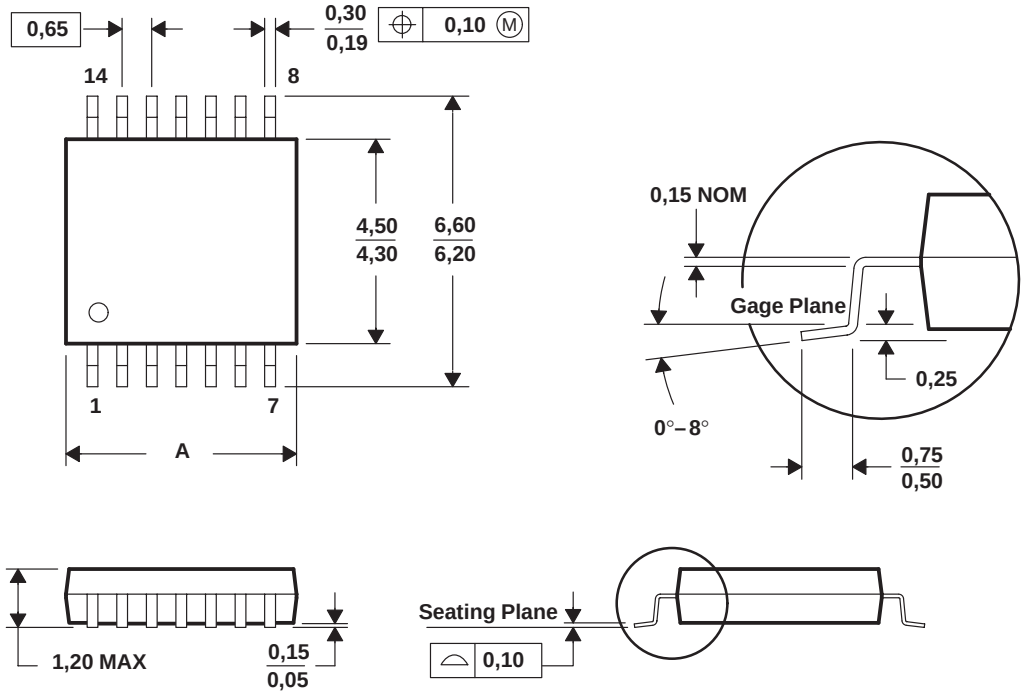

DIM \ PINS **	8	14	16	20	24	28
A MAX	3,10	5,10	5,10	6,60	7,90	9,80
A MIN	2,90	4,90	4,90	6,40	7,70	9,60

4040064/F 01/97

NOTES: A. All linear dimensions are in millimeters.
B. This drawing is subject to change without notice.
C. Body dimensions do not include mold flash or protrusion not to exceed 0,15.
D. Falls within JEDEC MO-153

IMPORTANT NOTICE

Texas Instruments Incorporated and its subsidiaries (TI) reserve the right to make corrections, modifications, enhancements, improvements, and other changes to its products and services at any time and to discontinue any product or service without notice. Customers should obtain the latest relevant information before placing orders and should verify that such information is current and complete. All products are sold subject to TI's terms and conditions of sale supplied at the time of order acknowledgment.

TI warrants performance of its hardware products to the specifications applicable at the time of sale in accordance with TI's standard warranty. Testing and other quality control techniques are used to the extent TI deems necessary to support this warranty. Except where mandated by government requirements, testing of all parameters of each product is not necessarily performed.

TI assumes no liability for applications assistance or customer product design. Customers are responsible for their products and applications using TI components. To minimize the risks associated with customer products and applications, customers should provide adequate design and operating safeguards.

TI does not warrant or represent that any license, either express or implied, is granted under any TI patent right, copyright, mask work right, or other TI intellectual property right relating to any combination, machine, or process in which TI products or services are used. Information published by TI regarding third-party products or services does not constitute a license from TI to use such products or services or a warranty or endorsement thereof. Use of such information may require a license from a third party under the patents or other intellectual property of the third party, or a license from TI under the patents or other intellectual property of TI.

Reproduction of information in TI data books or data sheets is permissible only if reproduction is without alteration and is accompanied by all associated warranties, conditions, limitations, and notices. Reproduction of this information with alteration is an unfair and deceptive business practice. TI is not responsible or liable for such altered documentation.

Resale of TI products or services with statements different from or beyond the parameters stated by TI for that product or service voids all express and any implied warranties for the associated TI product or service and is an unfair and deceptive business practice. TI is not responsible or liable for any such statements.

Following are URLs where you can obtain information on other Texas Instruments products and application solutions:

Products		**Applications**	
Amplifiers	amplifier.ti.com	Audio	www.ti.com/audio
Data Converters	dataconverter.ti.com	Automotive	www.ti.com/automotive
DSP	dsp.ti.com	Broadband	www.ti.com/broadband
Interface	interface.ti.com	Digital Control	www.ti.com/digitalcontrol
Logic	logic.ti.com	Military	www.ti.com/military
Power Mgmt	power.ti.com	Optical Networking	www.ti.com/opticalnetwork
Microcontrollers	microcontroller.ti.com	Security	www.ti.com/security
Low Power Wireless	www.ti.com/lpw	Telephony	www.ti.com/telephony
		Video & Imaging	www.ti.com/video
		Wireless	www.ti.com/wireless

Mailing Address: Texas Instruments
Post Office Box 655303 Dallas, Texas 75265

Copyright © 2006, Texas Instruments Incorporated