USS Type

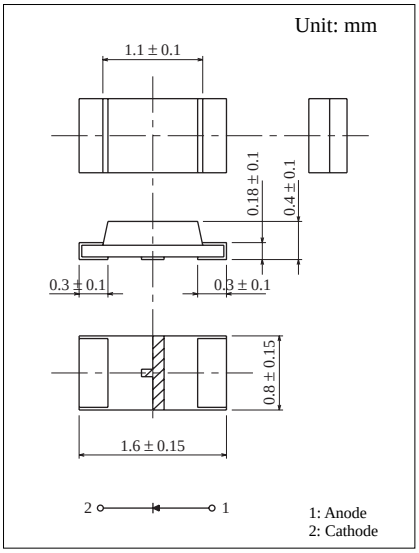

Conventional Part No. — Global Prat No. — Lighting Color

LNJ314G8TRA ····· LNJ314G8TRA ····· Green

■ Absolute Maximum Ratings (T_a = 25°C)

Lighting Color	P_D(mW)	I_F(mA)	I_{FP}(mA)*	V_R(V)	T_{opr}(°C)	T_{stg}(°C)
Green	40	15	50	4	–30 ~ +85	–40 ~ +100

★I_{FP}の条件は, duty 10%, Pulse width 1 msec. The condition of I_{FP} is duty 10%, Pulse width 1 msec

■ Electro–Optical Characteristics (T_a = 25°C)

Conventional Part No.	Lighting Color	Lens Color	I_O		I_F	V_F		λ_P	$\Delta\lambda$	I_F	I_R	
			Typ	Min		Typ	Max	Typ	Typ		Max	V_R
LNJ314G8TRA	Green	Green Diffused	5.0	1.8	10	2.03	2.6	565	30	10	10	4
Unit	—	—	mcd	mcd	mA	V	V	nm	nm	mA	μA	V

I_O — I_F

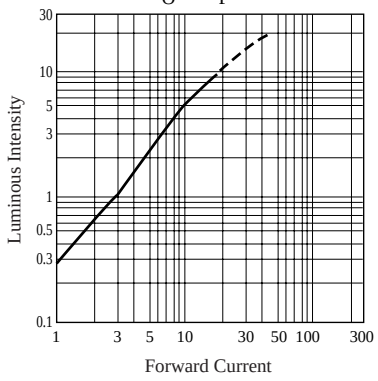

I_F — V_F

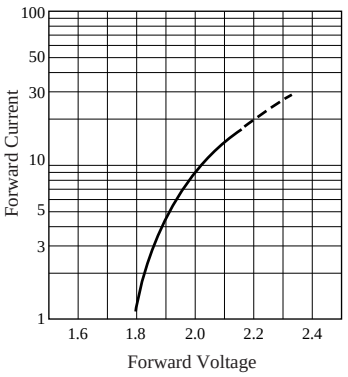

I_O — T_a

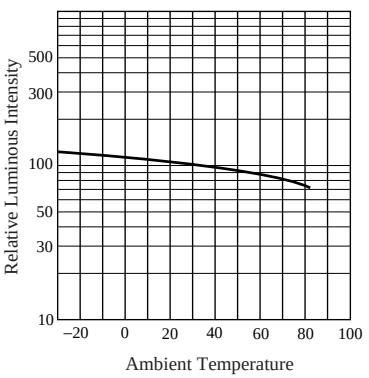

Relative Luminous Intensity Wavelength Characteristics

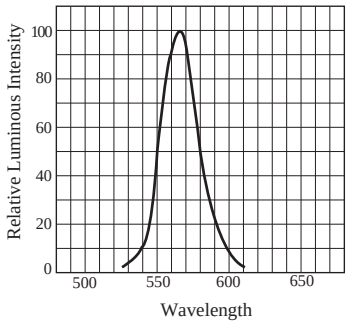

Directive Characteristics

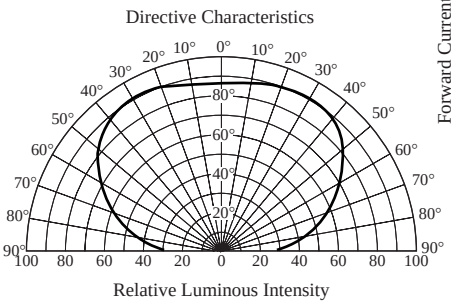

I_F — T_a

