LMX2594 EVM Instructions – 15-GHz Wideband Low Noise PLL With Integrated VCO

This Evaluation Module is for the LMX2594, which is the first PLL with integrated VCO in industry to get fundamental VCO output up to 15 GHz. The industry leading PLL FOM is –236 dBc/Hz with 1/f of –129 dBc/Hz. This device supports the JESD204B standard (as in the LMX2594 can generate or repeat the SYSREF signal), and is designed for clock high-speed data converters. The integrated jitter from the EVM measurements is less than 50 fs at 9-GHz carrier frequency. By providing a SYNC signal, the user can synchronize the output phase across multiple LMX2594 devices. The LMX2594 can also generate a frequency ramp as demonstrated in this evaluation module. With an on-board oscillator, the setup process only requires a 3.3-V power supply and a Reference Pro module (included for SPI Programming interface). The software is simple with an intuitive and user-friendly GUI.

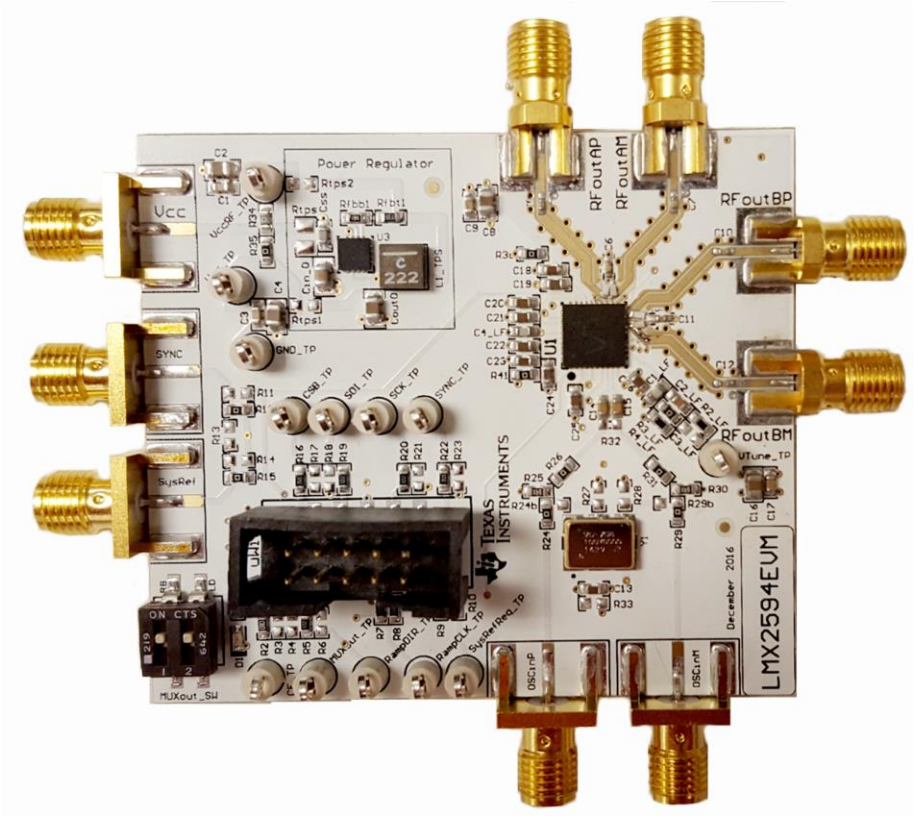

Figure 1. LMX2594EVM

Contents

1 Evaluation Board Setup 3
2 EVM Description 3
3 Bringing LMX2594 to a Lock State 5
4 Loop Filter Configuration 5
5 Key Results to Expect 6

Copyright © 2017–2020, Texas Instruments Incorporated

Appendix A Schematic 7
Appendix B Bill of Materials 8
Appendix C Board Layers Stack-Up 9
Appendix D Changing Reference Oscillator and Setup 11
Appendix E Connecting Reference Pro 12
Appendix F Ramping Feature 14
Appendix G SYSREF Feature 15
Appendix H Enabling Onboard DC-DC Buck Converter (TPS62150) 16

Trademarks

PLLATINUM is a trademark of Texas Instruments.
All other trademarks are the property of their respective owners.

Copyright © 2017–2020, Texas Instruments Incorporated

1 Evaluation Board Setup

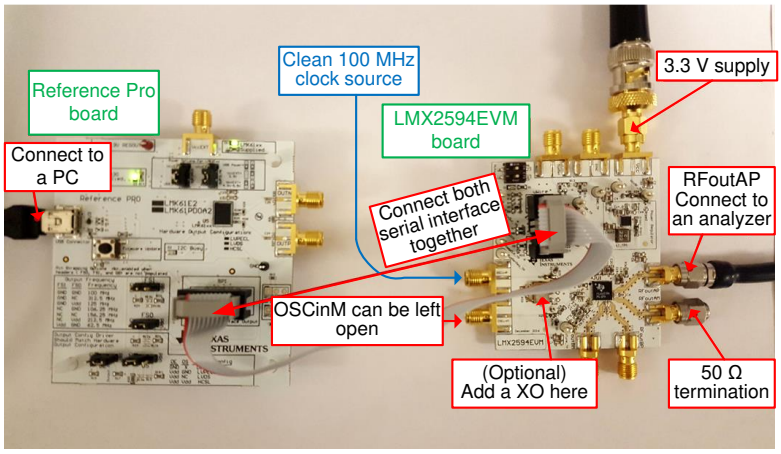

Figure 2. LMX2594EVM Setup

1. Power:
   a. Set power supply to 3.3 V with 600-mA current limit and connect to V_{CC} SMA.
2. Input Signal:
   a. Connect a clean 100-MHz clock source to the OSCinP SMA.
3. Programming Interface:
   - Reference Pro will provide SPI interface to program LMX2594.

   a. Connect USB cable from laptop or PC to USB port in Reference Pro. This provides power to Reference Pro board and communication with TICS GUI.
   b. Connect 10 pin ribbon cable from Reference Pro to LMX2594EVM as shown above.
4. Output:
   a. Connect RFoutAM or RFoutAP to a phase noise analyzer. Connect a 50-Ω resistor on the unused pin if you are using a single-ended output. Use a balun if you are using a differential output.

2 EVM Description

The LMX2594 is populated on a 4-layer PCB. This brief description should help you use the EVM:

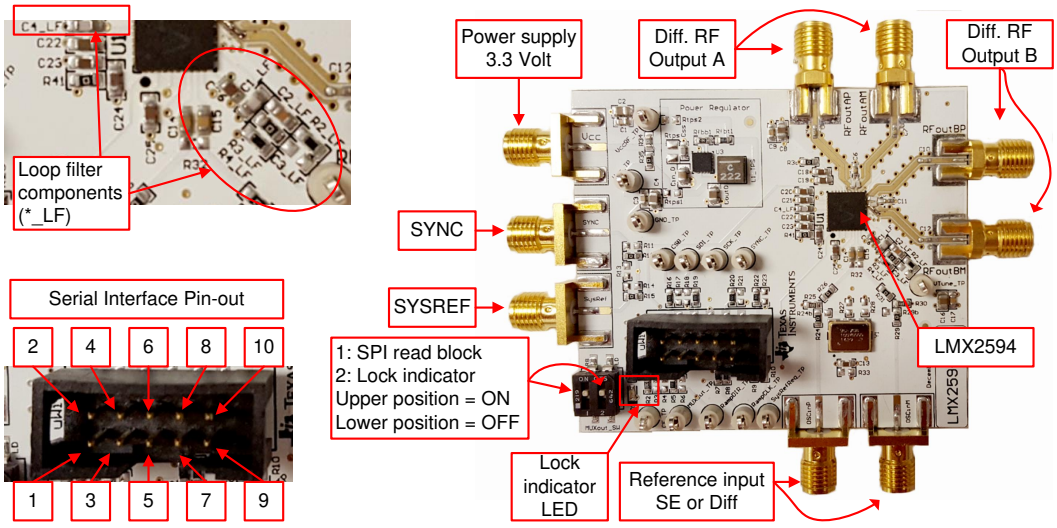

Figure 3. LMX2594EVM Description

Copyright © 2017–2020, Texas Instruments Incorporated

The serial interface pin description is as follow:

Table 1. Serial Interface Connector Description

NO.	NAME
1	RAMPDIR and CE (Choose with Resistors on Board)
2	CSB
3	MUXout
4	SDI
5	Not Used
6	GND
7	RampCLK
8	SCK
9	SysRefReq
10	SYNC

2.1 Installing the Software

1. Download TICS Pro from the TI Website at www.ti.com/tool/TICSPRO-SW.
2. Install the software by following the wizard.
3. Search for the LMX2594. In the menu bar, search Select Device → PLL + VCO → LMX2594

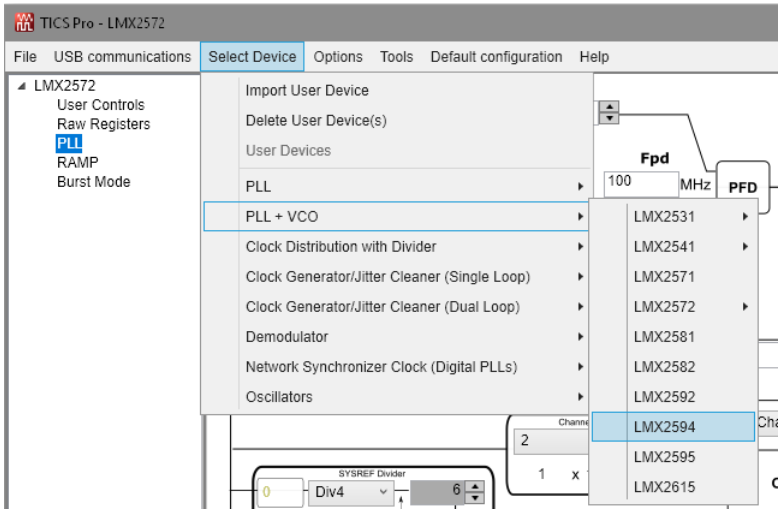

Figure 4. Search for LMX2594 on TICS Pro

4. You are now ready to use this software. Verify that you can communicate with Reference Pro. Select Interface under USB communications.

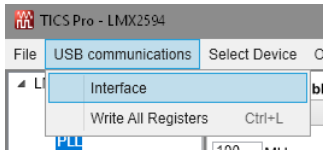

Figure 5. USB Communications on TICS Pro

5. Click on Identify and you will see the LED (MSP430 Supplied) blinks on Reference Pro.

Copyright © 2017–2020, Texas Instruments Incorporated

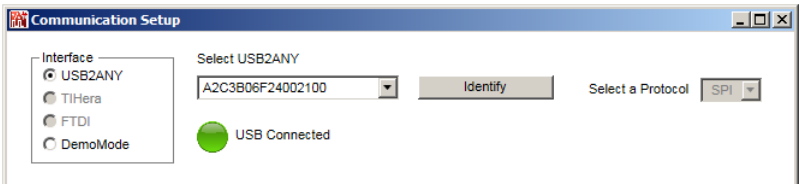

Figure 6. USB Communication Between TICS Pro and Reference Pro

3 Bringing LMX2594 to a Lock State

1. Load the default mode by clicking on Default configuration → Default Mode xxxx-xx-xx.
2. From the menu bar, select USB communications → Write All Registers, to write all the registers to LMX2594.

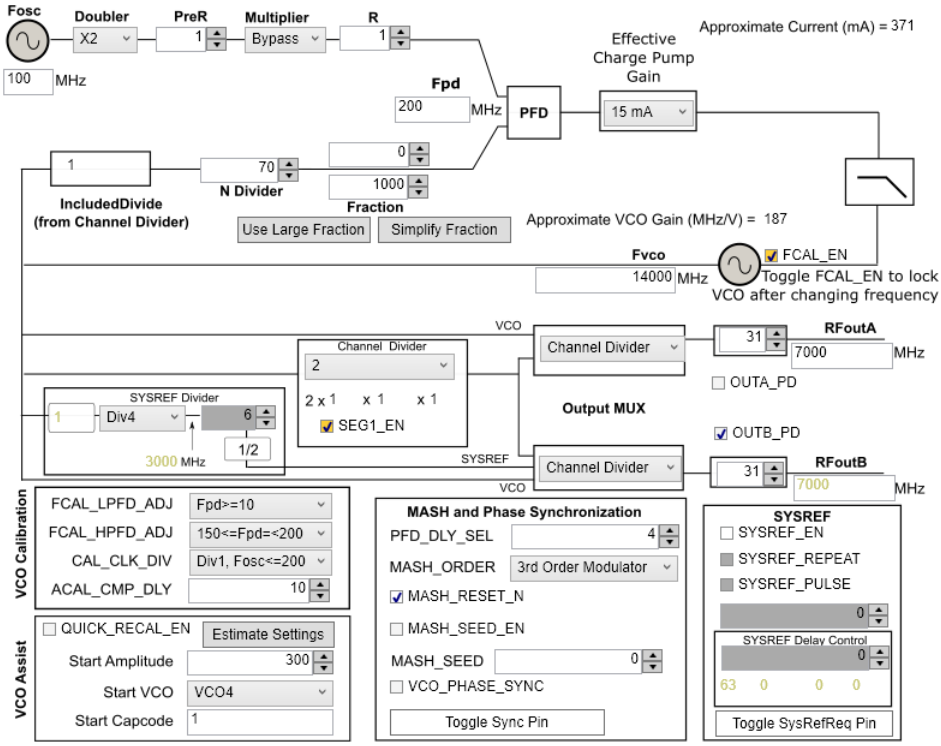

Figure 7. TICS Pro GUI LMX2594 Default Configuration

4 Loop Filter Configuration

The parameters for the loop filters are:

Table 2. Loop Filter Configuration

PARAMETER	VALUE
VCO Gain	132 MHz/V
Loop Bandwidth	285 kHz
Phase Margin	65 deg
C1_LF	390 pF
C2_LF	68 nF
C3_LF	Open
C4_LF	1800 pF

Copyright © 2017–2020, Texas Instruments Incorporated

Table 2. Loop Filter Configuration (continued)

PARAMETER	VALUE
R2	68 Ω
R3_LF	0 Ω
R4_LF	18 Ω
Effective Charge Pump Gain	15 mA
Phase Detector Frequency (MHz)	200 MHz
VCO Frequency	Designed for 15 GHz, but works over the whole frequency range

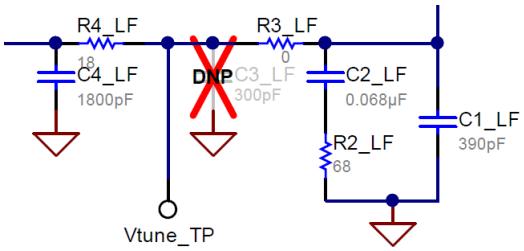

Figure 8. Loop Filter Configuration

For detailed design and simulation of TI's PLLATINUM™ integrated circuits, see the PLLatinum Sim Tool.

For application notes, blogs, or videos on TI PLL products, see http://www.ti.com/pll.

5 Key Results to Expect

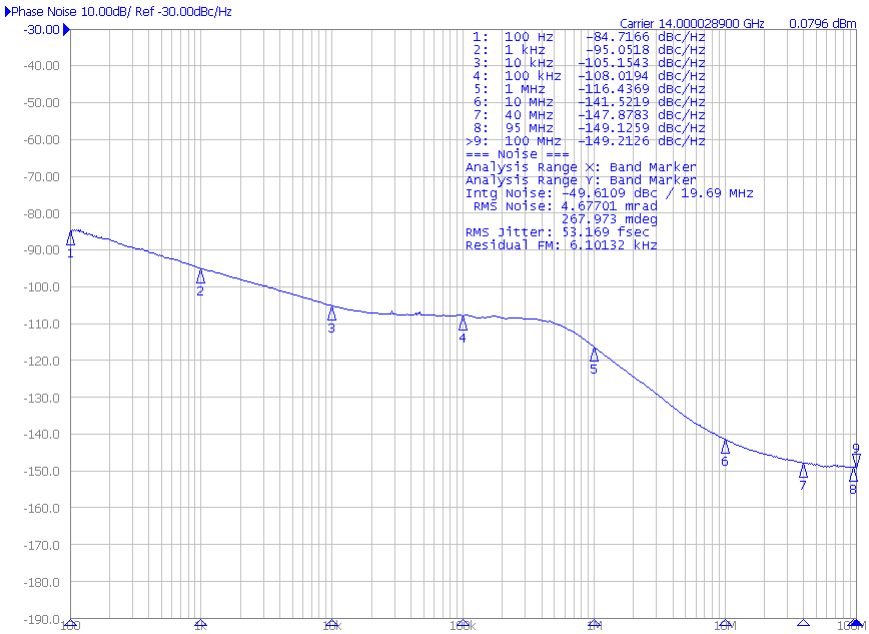

Figure 9. Phase Noise Plot at 14-GHz Output Frequency

This assumes that the input reference is very clean, such as a 100-MHz Wenzel oscillator. A signal generator is NOT sufficiently clean.

Copyright © 2017–2020, Texas Instruments Incorporated

Schematic

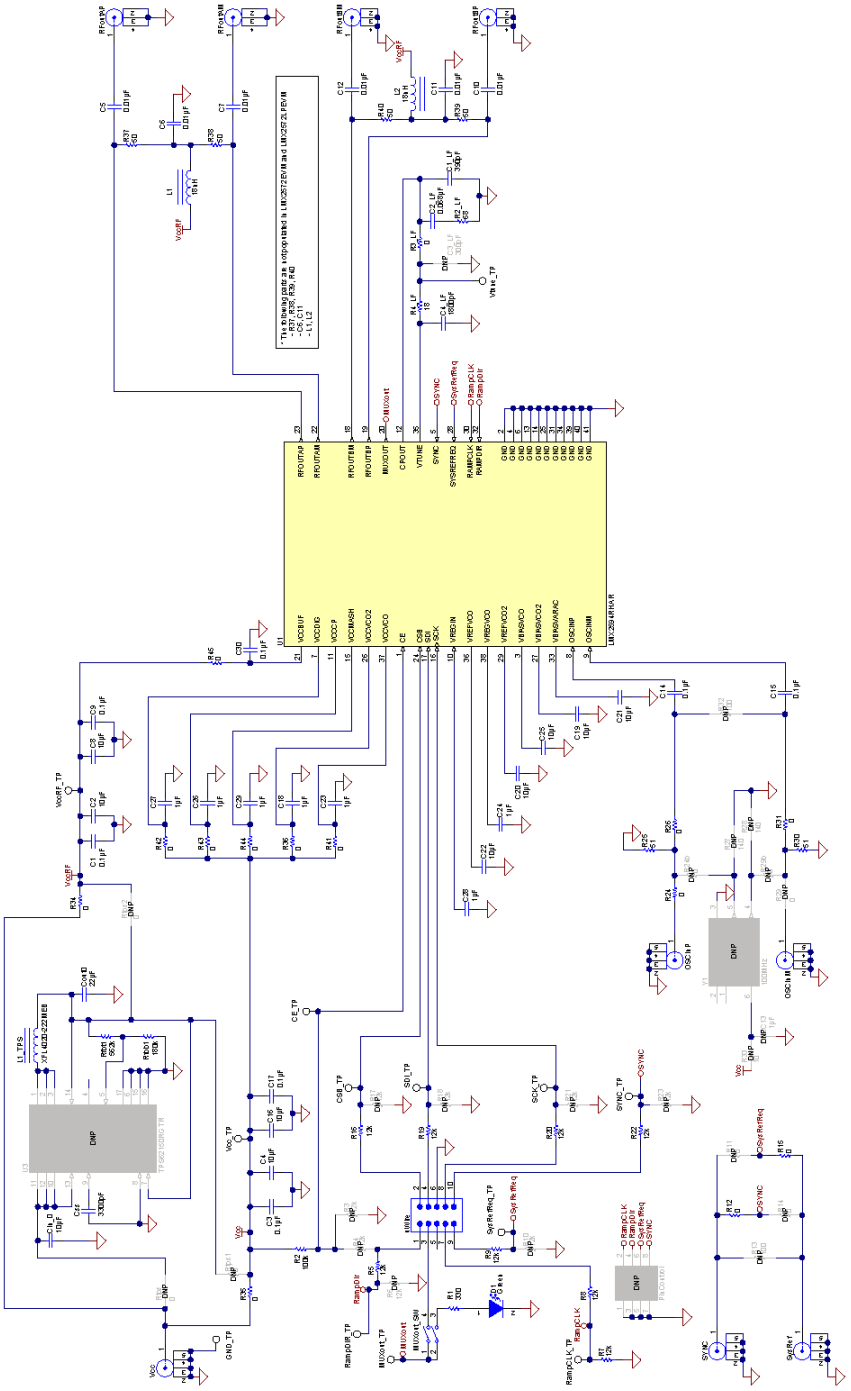

Figure 10. Schematic

Copyright © 2017–2020, Texas Instruments Incorporated

Bill of Materials

Table 3. Bill of Materials

DESIGNATOR	DESCRIPTION	MANUFACTURER	PART NUMBER	QUANTITY
C1, C3, C9, C14, C15, C17, C30	CAP, CERM, 0.1 µF, 16 V, ±5%, X7R, 0603	AVX	0603YC104JAT2A	7
C1_LF	CAP, CERM, 390 pF, 50 V, ±5%, C0G/NP0, 0603	Kemet	C0603C391J5GACTU	1
C2, C4, C8, C16	CAP, CERM, 10 µF, 10 V, ±10%, X5R, 0805	Kemet	C0805C106K8PACTU	4
C2_LF	CAP, CERM, 0.068 µF, 50 V, ±10%, X7R, 0603	MuRata	GRM188R71H683KA93D	1
C4_LF	CAP, CERM, 1800 pF, 50 V, ±5%, C0G/NP0, 0603	MuRata	GRM1885C1H182JA01D	1
C5, C6, C7, C10, C11, C12	CAP, CERM, 0.01 µF, 16 V, ±10%, X7R, 0402	AT Ceramics	520L103KT16T	6
C18, C23, C24, C26, C27, C28, C29	CAP, CERM, 1 µF, 16 V, ±10%, X7R, 0603	TDK	C1608X7R1C105K080AC	7
C19, C20, C21, C22, C25	CAP, CERM, 10 µF, 10 V, ±20%, X5R, 0603	TDK	C1608X5R1A106M080AC	5
CE_TP, CSB_TP, GND_TP, MUXout_TP, RampCLK_TP, RampDIR_TP, SCK_TP, SDI_TP, SYNC_TP, SysRefReq_TP, Vcc_TP, VccRF_TP, Vtune_TP	Test Point, Compact, White, TH	Keystone	5007	13
Cin_0	CAP, CERM, 10 µF, 25 V, ±10%, X5R, 0805	MuRata	GRM219R61E106KA12D	1
Cout0	CAP, CERM, 22 µF, 16 V, ±10%, X5R, 0805	TDK	C2012X5R1C226K125AC	1
Css	CAP, CERM, 3300 pF, 50 V, ±5%, C0G/NP0, 0603	MuRata	GRM1885C1H332JA01D	1
D1	LED, Green, SMD	Lite-On	LTST-C190GKT	1
L1, L2	Inductor, Multilayer, Air Core, 18 nH, 0.3 A, 0.36 Ω, SMD	MuRata	LQG15HS18NJ02D	2
L1_TPS	Inductor, Shielded, Composite, 2.2 µH, 3.7 A, 0.02 Ω, SMD	Coilcraft	XFL4020-222MEB	1
MUXout_SW	Switch, SPST, Slide, Off-On, 2 Pos, 0.1 A, 20 V, SMD	CTS Electrocomponents	219-2MST	1
OSCinM, OSCinP, SYNC, SysRef, Vcc	Connector, SMT, End launch SMA 50 ohm	Emerson Network Power Connectivity	142-0701-851	5
R1	RES, 330 Ω, 5%, 0.1 W, 0603	Yageo America	RC0603JR-07330RL	1
R2	RES, 100 k, 5%, 0.1 W, 0603	Vishay-Dale	CRCW0603100KJNEA	1
R2_LF	RES, 68, 5%, 0.1 W, 0603	Vishay-Dale	CRCW060368R0JNEA	1
R3_LF, R12, R15, R24, R26, R25, R30, R31, R34, R35, R36, R41, R42, R43, R44, R45	RES, 0, 5%, 0.1 W, 0603	Vishay-Dale	CRCW06030000Z0EA	16
R4_LF	RES, 18, 5%, 0.1 W, 0603	Vishay-Dale	CRCW060318R0JNEA	1
R5, R7, R8, R9, R16, R19, R20, R22	RES, 12 kΩ, 5%, 0.1 W, 0603	Vishay-Dale	CRCW060312K0JNEA	8
R37, R38, R39, R40	RES, 50, 0.1%, 0.05 W, 0402	Vishay-Dale	FC0402E50R0BST1	4
Rfbb1	RES, 180 k, 0.1%, 0.1 W, 0603	Yageo America	RT0603BRD07180KL	1
Rfbt1	RES, 562 k, 1%, 0.1 W, 0603	Vishay-Dale	CRCW0603562KFKEA	1
RFoutAM, RFoutAP, RFoutBM, RFoutBP	JACK, SMA, 50 Ω, Gold, Edge Mount	Johnson	142-0771-831	4
U1	Wideband RF Synthesizer	Texas Instruments	LMX2594RHAR	1
uWire	Header (shrouded), 100 mil, 5x2, Gold plated, SMD	FCI	52601-S10-8LF	1

Copyright © 2017–2020, Texas Instruments Incorporated

Board Layers Stack-Up

The top layer is 1-oz. copper.

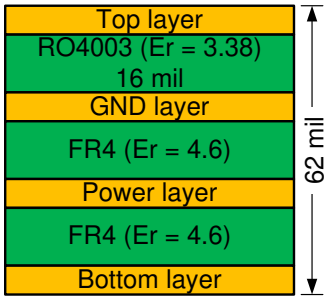

Figure 11. Board Layer Stack-Up

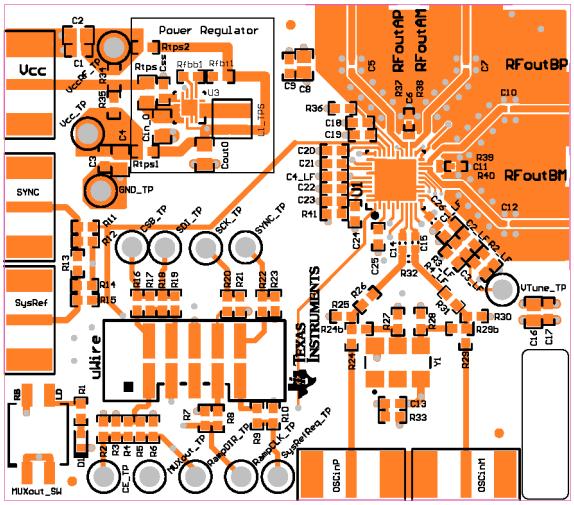

Figure 12. Top Layer

Copyright © 2017–2020, Texas Instruments Incorporated

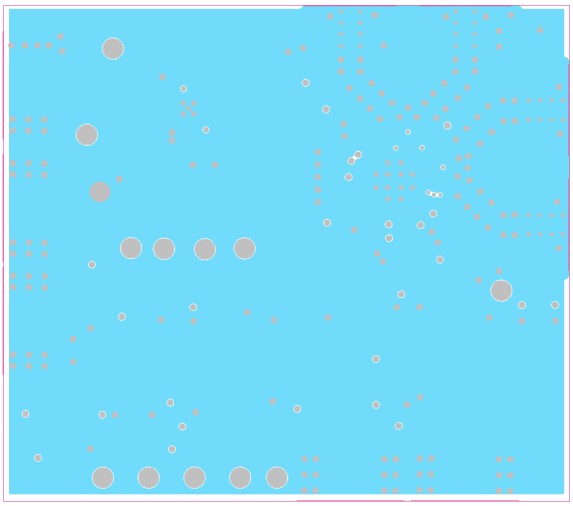

Figure 13. GND Layer

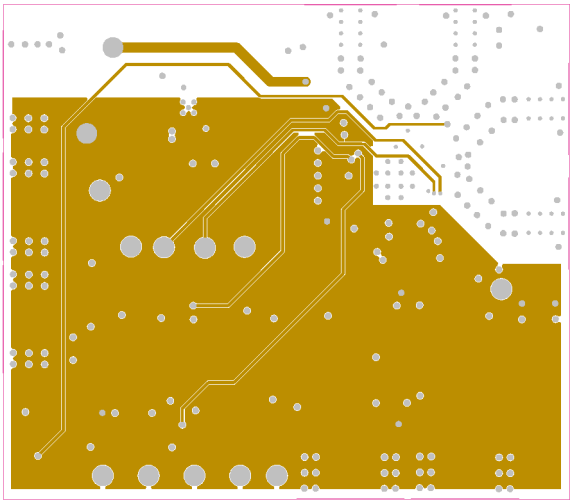

Figure 14. Power Layer

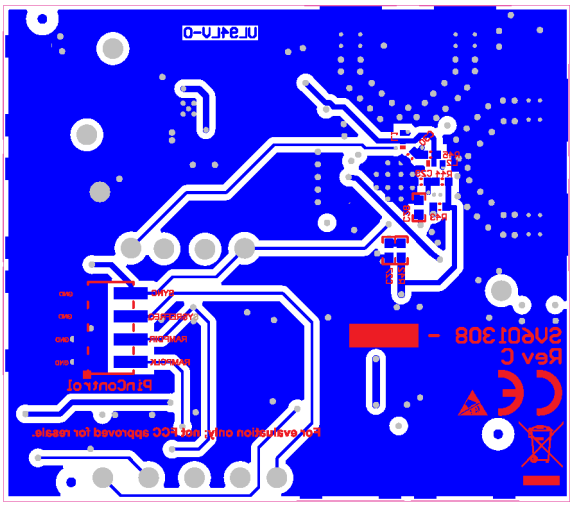

Figure 15. Bottom Layer

Copyright © 2017–2020, Texas Instruments Incorporated

Changing Reference Oscillator and Setup

The reference can be single-ended or differential. To measure the performance of the PLL ONLY, the reference should have at least this level of performance. We understand that this can be a challenge at 100-Hz offset:

Table 4. Reference Oscillator Requirements

100-MHz REFERENCE MINIMUM REQUIREMENTS FOR A 0.4-dB IMPACT ON PLL INBAND PN[1]				
Offset [Hz]	100	1k	10k	100k
Noise level [dBc/Hz]	–139	–149	–159	–164

(1) A noise source 10 dB down from the PLL noise will contribute to raise the noise by 0.4 dB.

There are different options to provide a reference oscillator to LMX2594. Use on-board oscillator, enable LMK61xx from Reference Pro PCB, or use external oscillator. By default, the EVM is configured for an external single-ended clock.

Table 5. Reference Clock Input Configuration

INPUT	EXTERNAL CLOCK	CRYSTAL OSCILLATOR
Single-ended	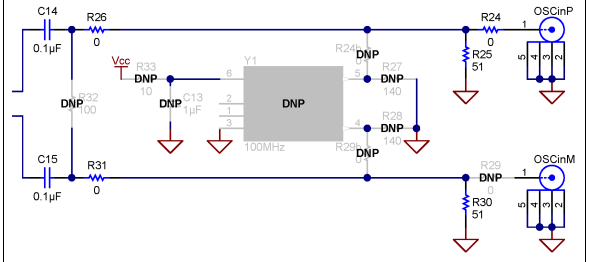	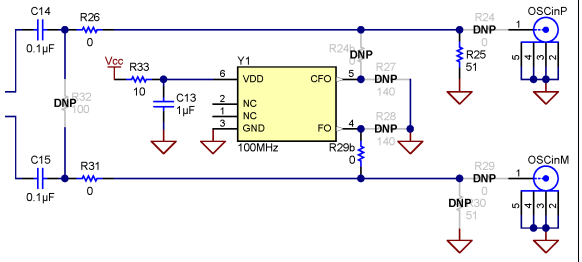
Differential (LVDS)	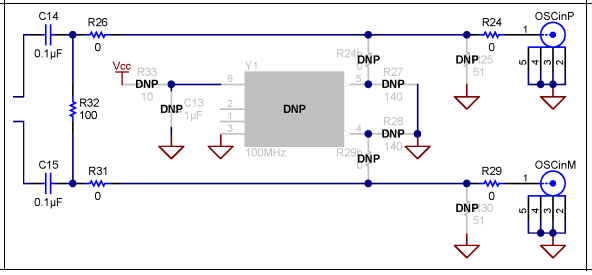	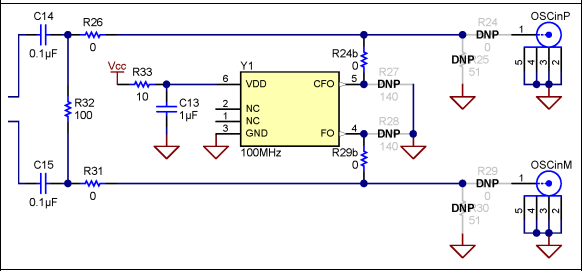

Copyright © 2017–2020, Texas Instruments Incorporated

Connecting Reference Pro

To use Reference Pro, change the configuration for SE or differential connection as shown on *Appendix D*.

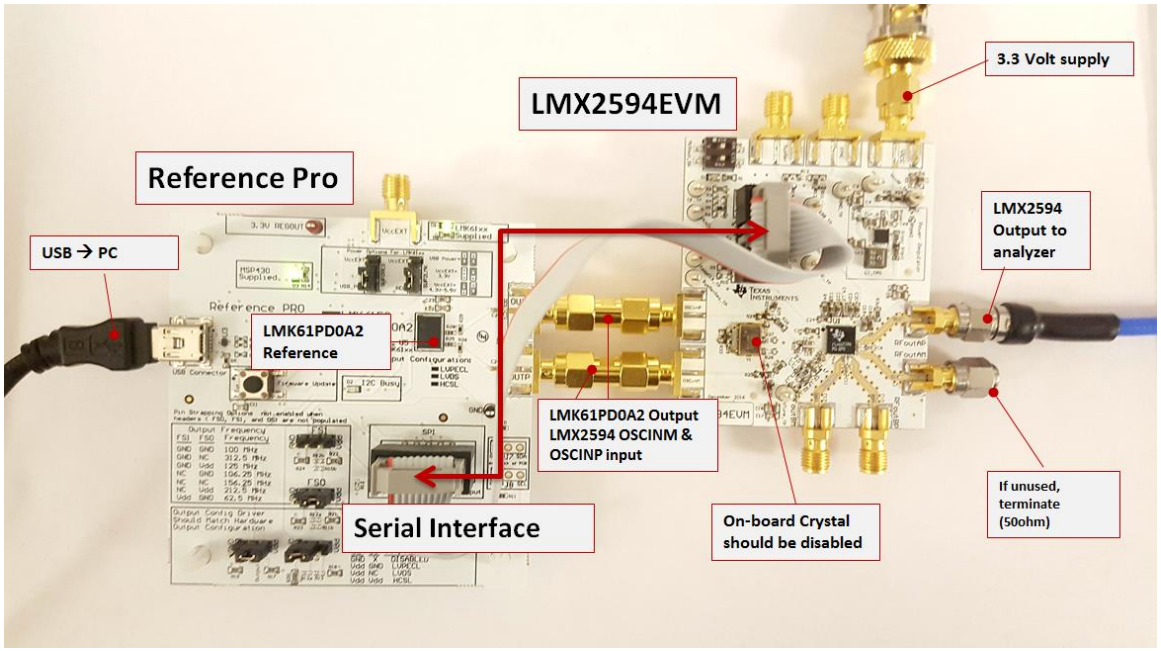

Figure 16. LMX2594EVM Setup With Reference Pro

The LMK61PD0A2 has several control pins dedicated for output format control, output frequency control, and output enable control. These control pins can be configured through the jumpers shown in Table 6 and Table 7.

Jumpers FS1, FS0, OS, and OE can be used to configure the corresponding control pin to either high or low state by strapping the center pin to *VDD* position (tie pins 2-3) or *GND* position (tie pins 1-2), respectively. Connections from the *VDD* position to the device supply or from the *GND* position to the ground plane are connected by 1.5-kΩ resistors.

Table 6. Output Frequency of LMK61PD0A2 (Reference Pro)

FS1	FS0	OUTPUT FREQUENCY (MHz)
0	0	100
0	NC	312.5
0	1	125
NC	0	106.25
NC	NC	156.25
NC	1	212.5
1	0	62.5

Copyright © 2017–2020, Texas Instruments Incorporated

Table 7. Output Type of LMK61PD0A2 (Reference Pro)

OS	OE	OUTPUT TYPE
X	O	Disabled (PLL Functional)
0	1	LVPECL
NC	1	LVDS
1	1	HCSL

The OS pin is used to bias internal drivers and change the output type. It is imperative to match the output termination passive components as shown on Table 8 with the output type from Table 7.

Table 8 lists component values for each configuration.

Table 8. Output Termination Schemes

OUTPUT FORMAT	COUPLING	COMPONENT	VALUE
LVPECL	AC (default EVM configuration)	R25, R28	0 Ω
		R26, R29	150 Ω
		C24, C25	0.01 µF
		R27, R30, R31	DNP
	DC[1]	R25, R28, C24, C25	0 Ω
		R26, R29, R27, R30, R31	DNP
LVDS[2]	AC	R25, R28, R27, R30	0 Ω
		R31	100 Ω
		C24, C25	0.01 µF
		R26, R29	DNP
	DC	R25, R27, R28, R30, C24, C25	0 Ω
		R31	100 Ω
		R26, R29	DNP
HCSL	AC	R25, R28	0 Ω
		R26, R29	50 Ω
		C24, C25	0 Ω
		R27, R30, R31	DNP
	DC	R25, R28	0 Ω
		R26, R29	50 Ω
		C24, C25	0.01 µF
		R27. R30, R31	DNP

(1) 50 Ω to V_{CC} – 2-V termination is required on receiver.

(2) 100-Ω differential termination (R31) is provided on Reference Pro PCB. Removing the differential termination on the EVM is possible if the differential termination is available on the receiver.

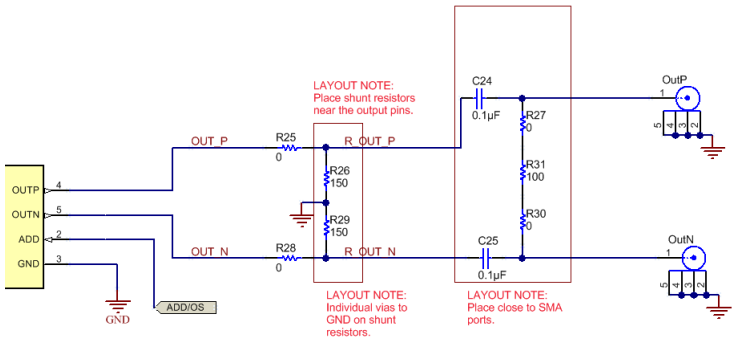

Figure 17. LMK61PD0A2 Output Termination

Copyright © 2017–2020, Texas Instruments Incorporated

VCO is ramping from 12 to 12.125 GHz. This can be set up on the ramp GUI tab.

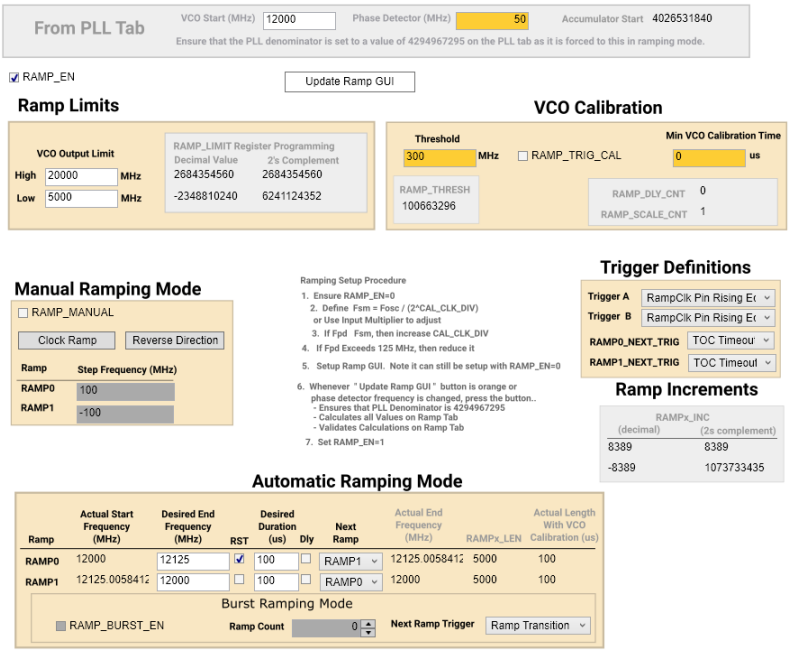

Figure 18. Ramping Example

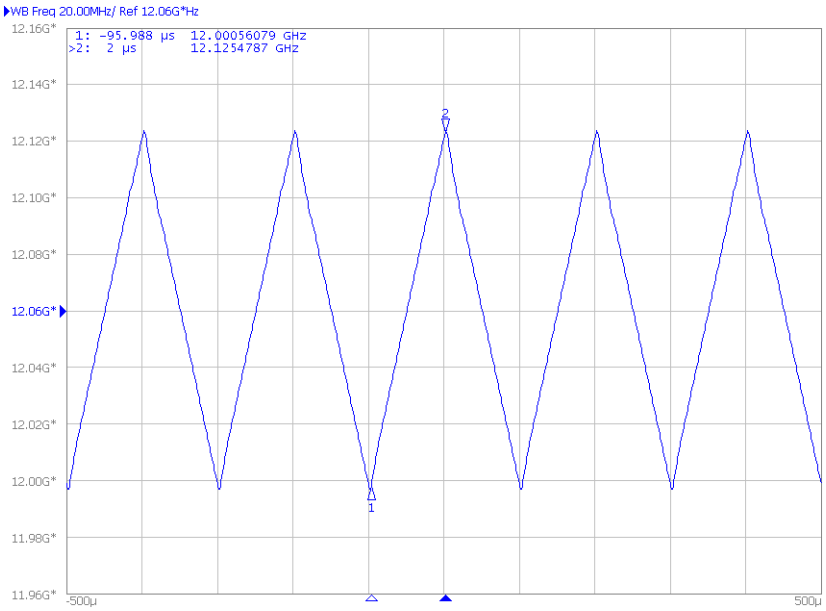

Figure 19. Ramping Example

Copyright © 2017–2020, Texas Instruments Incorporated

SYSREF Feature

1. Configure TICS Pro *PLL* tab for SYSREF.
   - Check the *SYSREF_EN* box and *VCO_PHASE_SYNC* box.
   - Change *OUTB_MUX* to *SysRef* and uncheck the *OUT_PD* box.
   - Confirm the *Interpolator frequency* is between 800 MHz and 1500 MHz. If not, change the *SYSREF_DIV_PRE* drop-down to *Div2* or *Div4*.
   - To modify SYSREF frequency, change the value in the *SYSREF_DIV* box.
   - Go to *User Controls* in the side bar, make sure the *INPIN_IGNORE* box is unchecked.
2. Click the *Toggle SysRefReq Pin* box to initiate SYSREF.

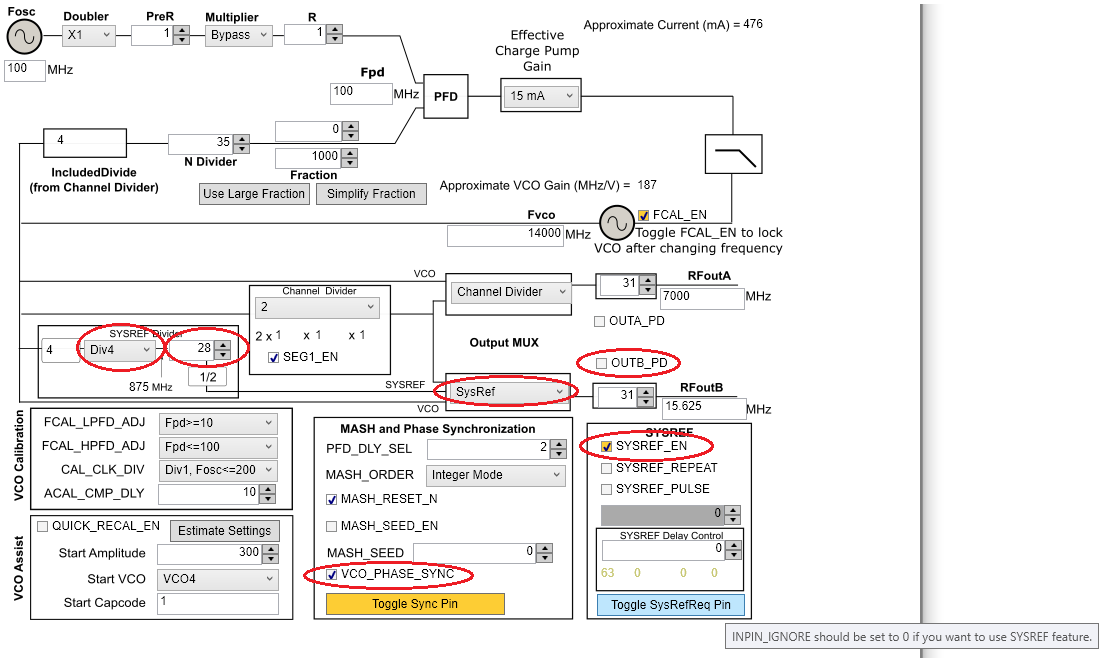

Figure 20. SYSREF Example

Table 9. SYSREF Modes

MODE NAME	DESCRIPTION	TICS PRO - SYS REF SETTINGS
Master - Continuos	LMX2594 generates SysRef pulses as long as SysRefReq pin is held high.	Default mode. See quick start instructions
Master - Pulse	LMX2594 generates a finite number of pulses as long as the SysRefReq pin is held high. **Note: SysRefReq must be held high for the duration of the pulses.**	• Uncheck *SysRefReq* under *Pins* in *User Controls* tab • Check *SYSREF_PULSE* • Set *SYSREF_PULSE_CNT* to desired number of pulses • Check *SysRefReq* under *Pins* in *User Controls* tab
Repeater	RFOUTB will repeat external input to SysRefReq pin. Output will be reclocked to LMX2594 internal frequency	• Uncheck *SysRefReq* • Check *SysRef_Repeat*

Copyright © 2017–2020, Texas Instruments Incorporated

Enabling Onboard DC-DC Buck Converter (TPS62150)

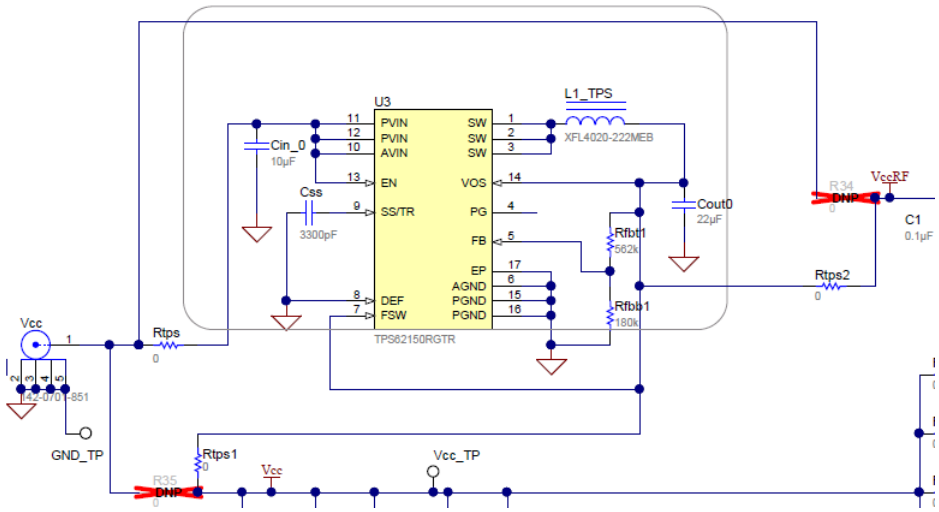

Figure 21. Resistor Configuration to Enable DC-DC

1. MUST SWITCH R35 to Rtps1
2. MUST SWITCH R34 to Rtps2
3. Populate Rtps
4. DC-DC circuitry was optimized for efficiency for 5 to 8 V, but a voltage of 3.3 V to 17 V can be applied to VCC SMA after resistor network is configured correctly from steps above.

Copyright © 2017–2020, Texas Instruments Incorporated

Revision History

NOTE: Page numbers for previous revisions may differ from page numbers in the current version.

Changes from Original (March 2017) to A Revision	Page
• Added abstract	1
• Added external reference clock in Figure 2.	3
• Changed to use external reference clock.	3
• Added PCB layout diagrams.	9
• Added diagrams for different reference clock input configuration.	11

Copyright © 2017–2020, Texas Instruments Incorporated

STANDARD TERMS FOR EVALUATION MODULES

1. *Delivery:* TI delivers TI evaluation boards, kits, or modules, including any accompanying demonstration software, components, and/or documentation which may be provided together or separately (collectively, an “EVM” or “EVMs”) to the User (“User”) in accordance with the terms set forth herein. User's acceptance of the EVM is expressly subject to the following terms.

   1.1 EVMs are intended solely for product or software developers for use in a research and development setting to facilitate feasibility evaluation, experimentation, or scientific analysis of TI semiconductors products. EVMs have no direct function and are not finished products. EVMs shall not be directly or indirectly assembled as a part or subassembly in any finished product. For clarification, any software or software tools provided with the EVM (“Software”) shall not be subject to the terms and conditions set forth herein but rather shall be subject to the applicable terms that accompany such Software

   1.2 EVMs are not intended for consumer or household use. EVMs may not be sold, sublicensed, leased, rented, loaned, assigned, or otherwise distributed for commercial purposes by Users, in whole or in part, or used in any finished product or production system.

2 *Limited Warranty and Related Remedies/Disclaimers*:

   2.1 These terms do not apply to Software. The warranty, if any, for Software is covered in the applicable Software License Agreement.

   2.2 TI warrants that the TI EVM will conform to TI's published specifications for ninety (90) days after the date TI delivers such EVM to User. Notwithstanding the foregoing, TI shall not be liable for a nonconforming EVM if (a) the nonconformity was caused by neglect, misuse or mistreatment by an entity other than TI, including improper installation or testing, or for any EVMs that have been altered or modified in any way by an entity other than TI, (b) the nonconformity resulted from User's design, specifications or instructions for such EVMs or improper system design, or (c) User has not paid on time. Testing and other quality control techniques are used to the extent TI deems necessary. TI does not test all parameters of each EVM. User's claims against TI under this Section 2 are void if User fails to notify TI of any apparent defects in the EVMs within ten (10) business days after delivery, or of any hidden defects with ten (10) business days after the defect has been detected.

   2.3 TI's sole liability shall be at its option to repair or replace EVMs that fail to conform to the warranty set forth above, or credit User's account for such EVM. TI's liability under this warranty shall be limited to EVMs that are returned during the warranty period to the address designated by TI and that are determined by TI not to conform to such warranty. If TI elects to repair or replace such EVM, TI shall have a reasonable time to repair such EVM or provide replacements. Repaired EVMs shall be warranted for the remainder of the original warranty period. Replaced EVMs shall be warranted for a new full ninety (90) day warranty period.

WARNING

Evaluation Kits are intended solely for use by technically qualified, professional electronics experts who are familiar with the dangers and application risks associated with handling electrical mechanical components, systems, and subsystems.

User shall operate the Evaluation Kit within TI’s recommended guidelines and any applicable legal or environmental requirements as well as reasonable and customary safeguards. Failure to set up and/or operate the Evaluation Kit within TI’s recommended guidelines may result in personal injury or death or property damage. Proper set up entails following TI’s instructions for electrical ratings of interface circuits such as input, output and electrical loads.

NOTE:

EXPOSURE TO ELECTROSTATIC DISCHARGE (ESD) MAY CAUSE DEGREDATION OR FAILURE OF THE EVALUATION KIT; TI RECOMMENDS STORAGE OF THE EVALUATION KIT IN A PROTECTIVE ESD BAG.

3 *Regulatory Notices:*

3.1 *United States*

3.1.1 *Notice applicable to EVMs not FCC-Approved:*

FCC NOTICE: This kit is designed to allow product developers to evaluate electronic components, circuitry, or software associated with the kit to determine whether to incorporate such items in a finished product and software developers to write software applications for use with the end product. This kit is not a finished product and when assembled may not be resold or otherwise marketed unless all required FCC equipment authorizations are first obtained. Operation is subject to the condition that this product not cause harmful interference to licensed radio stations and that this product accept harmful interference. Unless the assembled kit is designed to operate under part 15, part 18 or part 95 of this chapter, the operator of the kit must operate under the authority of an FCC license holder or must secure an experimental authorization under part 5 of this chapter.

3.1.2 *For EVMs annotated as FCC – FEDERAL COMMUNICATIONS COMMISSION Part 15 Compliant:*

CAUTION

This device complies with part 15 of the FCC Rules. Operation is subject to the following two conditions: (1) This device may not cause harmful interference, and (2) this device must accept any interference received, including interference that may cause undesired operation.

Changes or modifications not expressly approved by the party responsible for compliance could void the user's authority to operate the equipment.

FCC Interference Statement for Class A EVM devices

NOTE: This equipment has been tested and found to comply with the limits for a Class A digital device, pursuant to part 15 of the FCC Rules. These limits are designed to provide reasonable protection against harmful interference when the equipment is operated in a commercial environment. This equipment generates, uses, and can radiate radio frequency energy and, if not installed and used in accordance with the instruction manual, may cause harmful interference to radio communications. Operation of this equipment in a residential area is likely to cause harmful interference in which case the user will be required to correct the interference at his own expense.

FCC Interference Statement for Class B EVM devices

NOTE: This equipment has been tested and found to comply with the limits for a Class B digital device, pursuant to part 15 of the FCC Rules. These limits are designed to provide reasonable protection against harmful interference in a residential installation. This equipment generates, uses and can radiate radio frequency energy and, if not installed and used in accordance with the instructions, may cause harmful interference to radio communications. However, there is no guarantee that interference will not occur in a particular installation. If this equipment does cause harmful interference to radio or television reception, which can be determined by turning the equipment off and on, the user is encouraged to try to correct the interference by one or more of the following measures:

- *Reorient or relocate the receiving antenna.*
- *Increase the separation between the equipment and receiver.*
- *Connect the equipment into an outlet on a circuit different from that to which the receiver is connected.*
- *Consult the dealer or an experienced radio/TV technician for help.*

3.2 *Canada*

3.2.1 *For EVMs issued with an Industry Canada Certificate of Conformance to RSS-210 or RSS-247*

Concerning EVMs Including Radio Transmitters:

This device complies with Industry Canada license-exempt RSSs. Operation is subject to the following two conditions:

(1) this device may not cause interference, and (2) this device must accept any interference, including interference that may cause undesired operation of the device.

Concernant les EVMs avec appareils radio:

Le présent appareil est conforme aux CNR d'Industrie Canada applicables aux appareils radio exempts de licence. L'exploitation est autorisée aux deux conditions suivantes: (1) l'appareil ne doit pas produire de brouillage, et (2) l'utilisateur de l'appareil doit accepter tout brouillage radioélectrique subi, même si le brouillage est susceptible d'en compromettre le fonctionnement.

Concerning EVMs Including Detachable Antennas:

Under Industry Canada regulations, this radio transmitter may only operate using an antenna of a type and maximum (or lesser) gain approved for the transmitter by Industry Canada. To reduce potential radio interference to other users, the antenna type and its gain should be so chosen that the equivalent isotropically radiated power (e.i.r.p.) is not more than that necessary for successful communication. This radio transmitter has been approved by Industry Canada to operate with the antenna types listed in the user guide with the maximum permissible gain and required antenna impedance for each antenna type indicated. Antenna types not included in this list, having a gain greater than the maximum gain indicated for that type, are strictly prohibited for use with this device.

Concernant les EVMs avec antennes détachables

Conformément à la réglementation d'Industrie Canada, le présent émetteur radio peut fonctionner avec une antenne d'un type et d'un gain maximal (ou inférieur) approuvé pour l'émetteur par Industrie Canada. Dans le but de réduire les risques de brouillage radioélectrique à l'intention des autres utilisateurs, il faut choisir le type d'antenne et son gain de sorte que la puissance isotrope rayonnée équivalente (p.i.r.e.) ne dépasse pas l'intensité nécessaire à l'établissement d'une communication satisfaisante. Le présent émetteur radio a été approuvé par Industrie Canada pour fonctionner avec les types d'antenne énumérés dans le manuel d'usage et ayant un gain admissible maximal et l'impédance requise pour chaque type d'antenne. Les types d'antenne non inclus dans cette liste, ou dont le gain est supérieur au gain maximal indiqué, sont strictement interdits pour l'exploitation de l'émetteur

3.3 *Japan*

3.3.1 *Notice for EVMs delivered in Japan:* Please see http://www.tij.co.jp/lsds/ti_ja/general/eStore/notice_01.page 日本国内に輸入される評価用キット、ボードについては、次のところをご覧ください。
http://www.tij.co.jp/lsds/ti_ja/general/eStore/notice_01.page

3.3.2 *Notice for Users of EVMs Considered "Radio Frequency Products" in Japan:* EVMs entering Japan may not be certified by TI as conforming to Technical Regulations of Radio Law of Japan.

If User uses EVMs in Japan, not certified to Technical Regulations of Radio Law of Japan, User is required to follow the instructions set forth by Radio Law of Japan, which includes, but is not limited to, the instructions below with respect to EVMs (which for the avoidance of doubt are stated strictly for convenience and should be verified by User):

1. Use EVMs in a shielded room or any other test facility as defined in the notification #173 issued by Ministry of Internal Affairs and Communications on March 28, 2006, based on Sub-section 1.1 of Article 6 of the Ministry's Rule for Enforcement of Radio Law of Japan,
2. Use EVMs only after User obtains the license of Test Radio Station as provided in Radio Law of Japan with respect to EVMs, or
3. Use of EVMs only after User obtains the Technical Regulations Conformity Certification as provided in Radio Law of Japan with respect to EVMs. Also, do not transfer EVMs, unless User gives the same notice above to the transferee. Please note that if User does not follow the instructions above, User will be subject to penalties of Radio Law of Japan.

【無線電波を送信する製品の開発キットをお使いになる際の注意事項】 開発キットの中には技術基準適合証明を受けていないものがあります。 技術適合証明を受けていないもののご使用に際しては、電波法遵守のため、以下のいずれかの措置を取っていただく必要がありますのでご注意ください。

1. 電波法施行規則第6条第1項第1号に基づく平成18年3月28日総務省告示第173号で定められた電波暗室等の試験設備でご使用いただく。
2. 実験局の免許を取得後ご使用いただく。
3. 技術基準適合証明を取得後ご使用いただく。

なお、本製品は、上記の「ご使用にあたっての注意」を譲渡先、移転先に通知しない限り、譲渡、移転できないものとします。
上記を遵守頂けない場合は、電波法の罰則が適用される可能性があることをご留意ください。 日本テキサス・インスツルメンツ株式会社
東京都新宿区西新宿 6 丁目 2 4 番 1 号
西新宿三井ビル

3.3.3 *Notice for EVMs for Power Line Communication:* Please see http://www.tij.co.jp/lsds/ti_ja/general/eStore/notice_02.page
電力線搬送波通信についての開発キットをお使いになる際の注意事項については、次のところをご覧ください。http://www.tij.co.jp/lsds/ti_ja/general/eStore/notice_02.page

3.4 *European Union*

3.4.1 *For EVMs subject to EU Directive 2014/30/EU (Electromagnetic Compatibility Directive)*:

This is a class A product intended for use in environments other than domestic environments that are connected to a low-voltage power-supply network that supplies buildings used for domestic purposes. In a domestic environment this product may cause radio interference in which case the user may be required to take adequate measures.

4 *EVM Use Restrictions and Warnings:*

4.1 EVMS ARE NOT FOR USE IN FUNCTIONAL SAFETY AND/OR SAFETY CRITICAL EVALUATIONS, INCLUDING BUT NOT LIMITED TO EVALUATIONS OF LIFE SUPPORT APPLICATIONS.

4.2 User must read and apply the user guide and other available documentation provided by TI regarding the EVM prior to handling or using the EVM, including without limitation any warning or restriction notices. The notices contain important safety information related to, for example, temperatures and voltages.

4.3 *Safety-Related Warnings and Restrictions:*

4.3.1 User shall operate the EVM within TI's recommended specifications and environmental considerations stated in the user guide, other available documentation provided by TI, and any other applicable requirements and employ reasonable and customary safeguards. Exceeding the specified performance ratings and specifications (including but not limited to input and output voltage, current, power, and environmental ranges) for the EVM may cause personal injury or death, or property damage. If there are questions concerning performance ratings and specifications, User should contact a TI field representative prior to connecting interface electronics including input power and intended loads. Any loads applied outside of the specified output range may also result in unintended and/or inaccurate operation and/or possible permanent damage to the EVM and/or interface electronics. Please consult the EVM user guide prior to connecting any load to the EVM output. If there is uncertainty as to the load specification, please contact a TI field representative. During normal operation, even with the inputs and outputs kept within the specified allowable ranges, some circuit components may have elevated case temperatures. These components include but are not limited to linear regulators, switching transistors, pass transistors, current sense resistors, and heat sinks, which can be identified using the information in the associated documentation. When working with the EVM, please be aware that the EVM may become very warm.

4.3.2 EVMs are intended solely for use by technically qualified, professional electronics experts who are familiar with the dangers and application risks associated with handling electrical mechanical components, systems, and subsystems. User assumes all responsibility and liability for proper and safe handling and use of the EVM by User or its employees, affiliates, contractors or designees. User assumes all responsibility and liability to ensure that any interfaces (electronic and/or mechanical) between the EVM and any human body are designed with suitable isolation and means to safely limit accessible leakage currents to minimize the risk of electrical shock hazard. User assumes all responsibility and liability for any improper or unsafe handling or use of the EVM by User or its employees, affiliates, contractors or designees.

4.4 User assumes all responsibility and liability to determine whether the EVM is subject to any applicable international, federal, state, or local laws and regulations related to User's handling and use of the EVM and, if applicable, User assumes all responsibility and liability for compliance in all respects with such laws and regulations. User assumes all responsibility and liability for proper disposal and recycling of the EVM consistent with all applicable international, federal, state, and local requirements.

5. *Accuracy of Information:* To the extent TI provides information on the availability and function of EVMs, TI attempts to be as accurate as possible. However, TI does not warrant the accuracy of EVM descriptions, EVM availability or other information on its websites as accurate, complete, reliable, current, or error-free.

6. *Disclaimers:*

6.1 EXCEPT AS SET FORTH ABOVE, EVMS AND ANY MATERIALS PROVIDED WITH THE EVM (INCLUDING, BUT NOT LIMITED TO, REFERENCE DESIGNS AND THE DESIGN OF THE EVM ITSELF) ARE PROVIDED "AS IS" AND "WITH ALL FAULTS." TI DISCLAIMS ALL OTHER WARRANTIES, EXPRESS OR IMPLIED, REGARDING SUCH ITEMS, INCLUDING BUT NOT LIMITED TO ANY EPIDEMIC FAILURE WARRANTY OR IMPLIED WARRANTIES OF MERCHANTABILITY OR FITNESS FOR A PARTICULAR PURPOSE OR NON-INFRINGEMENT OF ANY THIRD PARTY PATENTS, COPYRIGHTS, TRADE SECRETS OR OTHER INTELLECTUAL PROPERTY RIGHTS.

6.2 EXCEPT FOR THE LIMITED RIGHT TO USE THE EVM SET FORTH HEREIN, NOTHING IN THESE TERMS SHALL BE CONSTRUED AS GRANTING OR CONFERRING ANY RIGHTS BY LICENSE, PATENT, OR ANY OTHER INDUSTRIAL OR INTELLECTUAL PROPERTY RIGHT OF TI, ITS SUPPLIERS/LICENSORS OR ANY OTHER THIRD PARTY, TO USE THE EVM IN ANY FINISHED END-USER OR READY-TO-USE FINAL PRODUCT, OR FOR ANY INVENTION, DISCOVERY OR IMPROVEMENT, REGARDLESS OF WHEN MADE, CONCEIVED OR ACQUIRED.

7. *USER'S INDEMNITY OBLIGATIONS AND REPRESENTATIONS.* USER WILL DEFEND, INDEMNIFY AND HOLD TI, ITS LICENSORS AND THEIR REPRESENTATIVES HARMLESS FROM AND AGAINST ANY AND ALL CLAIMS, DAMAGES, LOSSES, EXPENSES, COSTS AND LIABILITIES (COLLECTIVELY, "CLAIMS") ARISING OUT OF OR IN CONNECTION WITH ANY HANDLING OR USE OF THE EVM THAT IS NOT IN ACCORDANCE WITH THESE TERMS. THIS OBLIGATION SHALL APPLY WHETHER CLAIMS ARISE UNDER STATUTE, REGULATION, OR THE LAW OF TORT, CONTRACT OR ANY OTHER LEGAL THEORY, AND EVEN IF THE EVM FAILS TO PERFORM AS DESCRIBED OR EXPECTED.

8. *Limitations on Damages and Liability:*

   8.1 *General Limitations*. IN NO EVENT SHALL TI BE LIABLE FOR ANY SPECIAL, COLLATERAL, INDIRECT, PUNITIVE, INCIDENTAL, CONSEQUENTIAL, OR EXEMPLARY DAMAGES IN CONNECTION WITH OR ARISING OUT OF THESE TERMS OR THE USE OF THE EVMS , REGARDLESS OF WHETHER TI HAS BEEN ADVISED OF THE POSSIBILITY OF SUCH DAMAGES. EXCLUDED DAMAGES INCLUDE, BUT ARE NOT LIMITED TO, COST OF REMOVAL OR REINSTALLATION, ANCILLARY COSTS TO THE PROCUREMENT OF SUBSTITUTE GOODS OR SERVICES, RETESTING, OUTSIDE COMPUTER TIME, LABOR COSTS, LOSS OF GOODWILL, LOSS OF PROFITS, LOSS OF SAVINGS, LOSS OF USE, LOSS OF DATA, OR BUSINESS INTERRUPTION. NO CLAIM, SUIT OR ACTION SHALL BE BROUGHT AGAINST TI MORE THAN TWELVE (12) MONTHS AFTER THE EVENT THAT GAVE RISE TO THE CAUSE OF ACTION HAS OCCURRED.

   8.2 *Specific Limitations.* IN NO EVENT SHALL TI'S AGGREGATE LIABILITY FROM ANY USE OF AN EVM PROVIDED HEREUNDER, INCLUDING FROM ANY WARRANTY, INDEMITY OR OTHER OBLIGATION ARISING OUT OF OR IN CONNECTION WITH THESE TERMS, , EXCEED THE TOTAL AMOUNT PAID TO TI BY USER FOR THE PARTICULAR EVM(S) AT ISSUE DURING THE PRIOR TWELVE (12) MONTHS WITH RESPECT TO WHICH LOSSES OR DAMAGES ARE CLAIMED. THE EXISTENCE OF MORE THAN ONE CLAIM SHALL NOT ENLARGE OR EXTEND THIS LIMIT.

9. *Return Policy.* Except as otherwise provided, TI does not offer any refunds, returns, or exchanges. Furthermore, no return of EVM(s) will be accepted if the package has been opened and no return of the EVM(s) will be accepted if they are damaged or otherwise not in a resalable condition. If User feels it has been incorrectly charged for the EVM(s) it ordered or that delivery violates the applicable order, User should contact TI. All refunds will be made in full within thirty (30) working days from the return of the components(s), excluding any postage or packaging costs.

10. *Governing Law:* These terms and conditions shall be governed by and interpreted in accordance with the laws of the State of Texas, without reference to conflict-of-laws principles. User agrees that non-exclusive jurisdiction for any dispute arising out of or relating to these terms and conditions lies within courts located in the State of Texas and consents to venue in Dallas County, Texas. Notwithstanding the foregoing, any judgment may be enforced in any United States or foreign court, and TI may seek injunctive relief in any United States or foreign court.

Mailing Address: Texas Instruments, Post Office Box 655303, Dallas, Texas 75265
Copyright © 2019, Texas Instruments Incorporated

IMPORTANT NOTICE AND DISCLAIMER

TI PROVIDES TECHNICAL AND RELIABILITY DATA (INCLUDING DATASHEETS), DESIGN RESOURCES (INCLUDING REFERENCE DESIGNS), APPLICATION OR OTHER DESIGN ADVICE, WEB TOOLS, SAFETY INFORMATION, AND OTHER RESOURCES “AS IS” AND WITH ALL FAULTS, AND DISCLAIMS ALL WARRANTIES, EXPRESS AND IMPLIED, INCLUDING WITHOUT LIMITATION ANY IMPLIED WARRANTIES OF MERCHANTABILITY, FITNESS FOR A PARTICULAR PURPOSE OR NON-INFRINGEMENT OF THIRD PARTY INTELLECTUAL PROPERTY RIGHTS.

These resources are intended for skilled developers designing with TI products. You are solely responsible for (1) selecting the appropriate TI products for your application, (2) designing, validating and testing your application, and (3) ensuring your application meets applicable standards, and any other safety, security, or other requirements. These resources are subject to change without notice. TI grants you permission to use these resources only for development of an application that uses the TI products described in the resource. Other reproduction and display of these resources is prohibited. No license is granted to any other TI intellectual property right or to any third party intellectual property right. TI disclaims responsibility for, and you will fully indemnify TI and its representatives against, any claims, damages, costs, losses, and liabilities arising out of your use of these resources.

TI’s products are provided subject to TI’s Terms of Sale (www.ti.com/legal/termsofsale.html) or other applicable terms available either on ti.com or provided in conjunction with such TI products. TI’s provision of these resources does not expand or otherwise alter TI’s applicable warranties or warranty disclaimers for TI products.

Mailing Address: Texas Instruments, Post Office Box 655303, Dallas, Texas 75265
Copyright © 2020, Texas Instruments Incorporated