LMU16/216
16 x 16-bit Parallel Multiplier

FEATURES

- 20 ns Worst-Case Multiply Time
- Low Power CMOS Technology
- Replaces Fairchild MPY016/TMC216, Cypress CY7C516, IDT 7216L, and AMD Am29516
- Two's Complement, Unsigned, or Mixed Operands
- Three-State Outputs
- 68-pin PLCC, J-Lead

DESCRIPTION

The **LMU16** and **LMU216** are high-speed, low power 16-bit parallel multipliers. The LMU16 and LMU216 are functionally identical; they differ only in packaging.

The LMU16 and LMU216 produce the 32-bit product of two 16-bit numbers. Data present at the A inputs, along with the TCA control bit, is loaded into the A register on the rising edge of CLK A. B data and the TCB control bit are similarly loaded by CLK B. The TCA and TCB controls specify the A and B operands as two's complement when HIGH, or unsigned magnitude when LOW.

RND is loaded on the rising edge of the logical OR of CLK A and CLK B. RND, when HIGH, adds '1' to the most significant bit position of the least significant half of the product. Subsequent truncation of the 16 least significant bits produces a result correctly rounded to 16-bit precision.

At the output, the Right Shift control (RS) selects either of two output formats. RS LOW produces a 31-bit product with a copy of the sign bit inserted in the MSB postion of the least significant half. RS HIGH gives a full 32-bit product. Two 16-bit output registers are provided to hold the most and least significant halves of the result (MSP and LSP) as defined by RS. These registers are loaded on the rising edge of CLK M and CLK L respectively. For asynchronous output, these registers may be made transparent by setting the feed through control (FT) HIGH.

The two halves of the product may be routed to a single 16-bit three-state output port (MSP) via a multiplexer. $\overline{\text{MSPSEL}}$ LOW causes the MSP outputs to be driven by the most significant half of the result. $\overline{\text{MSPSEL}}$ HIGH routes the least significant half of the result to the MSP outputs. In addition, the LSP is available via the B port through a separate three-state buffer.

The output multiplexer control $\overline{\text{MSPSEL}}$ uses a pin which is a supply ground in the Fairchild MPY016H/TMC216H. When this control is LOW (GND), the function is that of the MPY016H/TMC216H, thus allowing full compatibility.

LMU16/216 Block Diagram

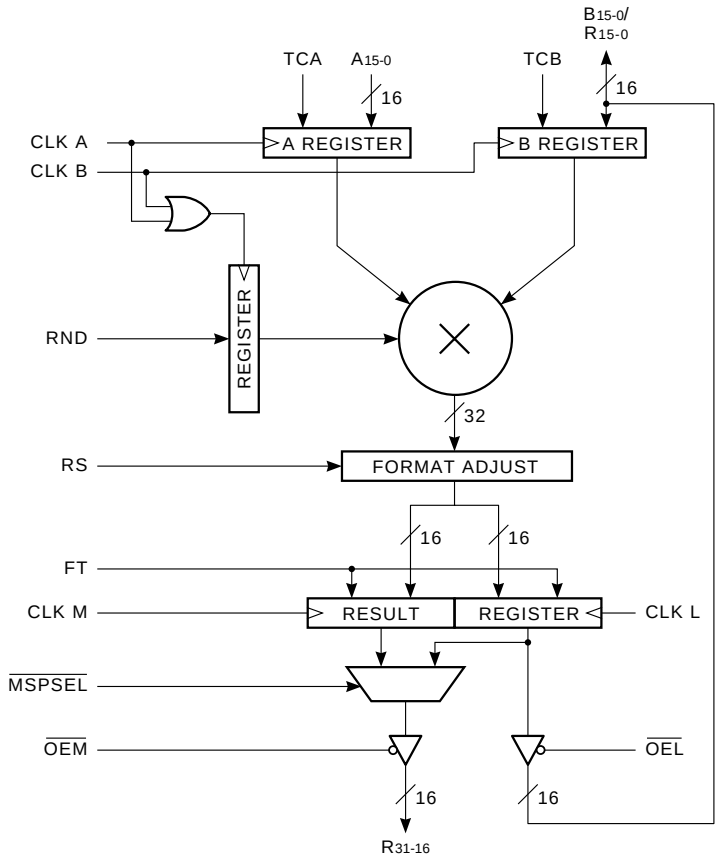

FIGURE 1A. INPUT FORMATS

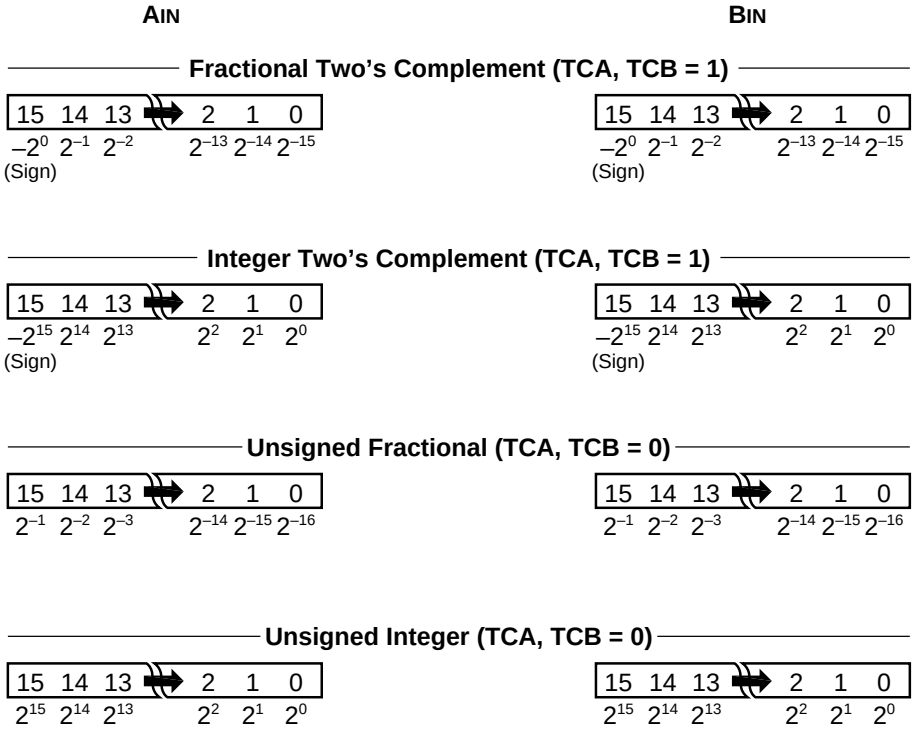

FIGURE 1B. OUTPUT FORMATS

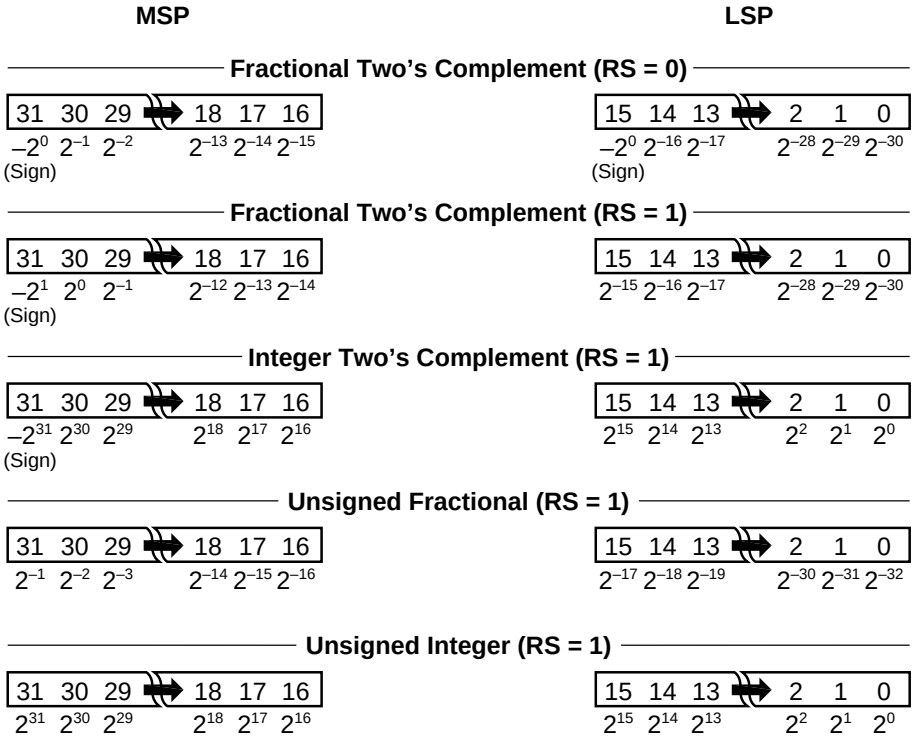

Maximum Ratings *Above which useful life may be impaired (Notes 1, 2, 3, 8)*

Storage temperature ..... –65°C to +150°C
Operating ambient temperature ..... –55°C to +125°C
V_{CC} supply voltage with respect to ground ..... –0.5 V to +7.0 V
Input signal with respect to ground ..... –3.0 V to +7.0 V
Signal applied to high impedance output ..... –3.0 V to +7.0 V
Output current into low outputs ..... 25 mA
Latchup current ..... > 400 mA

Operating Conditions *To meet specified electrical and switching characteristics*

Mode	Temperature Range (Ambient)	Supply Voltage
Active Operation, Commercial	0°C to +70°C	$4.75\ V \le V_{CC} \le 5.25\ V$
Active Operation, Military	–55°C to +125°C	$4.50\ V \le V_{CC} \le 5.50\ V$

Electrical Characteristics *Over Operating Conditions (Note 4)*

Symbol	Parameter	Test Condition	Min	Typ	Max	Unit
V_{OH}	Output High Voltage	V_{CC} = Min., I_{OH} = –2.0 mA	2.4			V
V_{OL}	Output Low Voltage	V_{CC} = Min., I_{OL} = 8.0 mA			0.5	V
V_{IH}	Input High Voltage		2.0		V_{CC}	V
V_{IL}	Input Low Voltage	(Note 3)	0.0		0.8	V
I_{IX}	Input Current	Ground ≤ V_{IN} ≤ V_{CC} (Note 12)			±20	µA
I_{OZ}	Output Leakage Current	Ground ≤ V_{OUT} ≤ V_{CC} (Note 12)			±20	µA
I_{CC1}	V_{CC} Current, Dynamic	(Notes 5, 6)		12	25	mA
I_{CC2}	V_{CC} Current, Quiescent	(Note 7)			1.0	mA

SWITCHING CHARACTERISTICS

COMMERCIAL OPERATING RANGE (0°C to +70°C) *Notes 9, 10 (ns)*

		LMU16/216–											
		65*		55*		45*		35*		25		20	
Symbol	Parameter	Min	Max	Min	Max	Min	Max	Min	Max	Min	Max	Min	Max
t_{MC}	Clocked Multiply Time		65		55		45		35		25		20
t_{MUC}	Unclocked Multiply Time		85		75		65		55		38		30
t_{PW}	Clock Pulse Width	15		15		15		10		10		9	
t_S	Input Setup Time	15		15		15		12		12		11	
t_H	Input Hold Time	1		1		1		1		1		1	
t_D	Output Delay		30		30		30		25		20		18
t_{SEL}	Output Select Delay		25		25		25		25		20		18
t_{ENA}	Three-State Output Enable Delay (Note 11)		25		25		25		25		20		18
t_{DIS}	Three-State Output Disable Delay (Note 11)		25		25		25		22		20		18

MILITARY OPERATING RANGE (–55°C to +125°C) *Notes 9, 10 (ns)*

		LMU16/216–											
		75*		65*		55*		40*		30*		25*	
Symbol	Parameter	Min	Max	Min	Max	Min	Max	Min	Max	Min	Max	Min	Max
t_{MC}	Clocked Multiply Time		75		65		55		40		30		25
t_{MUC}	Unclocked Multiply Time		95		85		75		60		43		38
t_{PW}	Clock Pulse Width	20		15		15		15		10		10	
t_S	Input Setup Time	15		15		15		15		12		12	
t_H	Input Hold Time	2		2		2		2		2		2	
t_D	Output Delay		35		30		30		25		20		20
t_{SEL}	Output Select Delay		30		30		30		25		20		20
t_{ENA}	Three-State Output Enable Delay (Note 11)		25		25		25		25		20		20
t_{DIS}	Three-State Output Disable Delay (Note 11)		25		25		25		25		22		22

SWITCHING WAVEFORMS

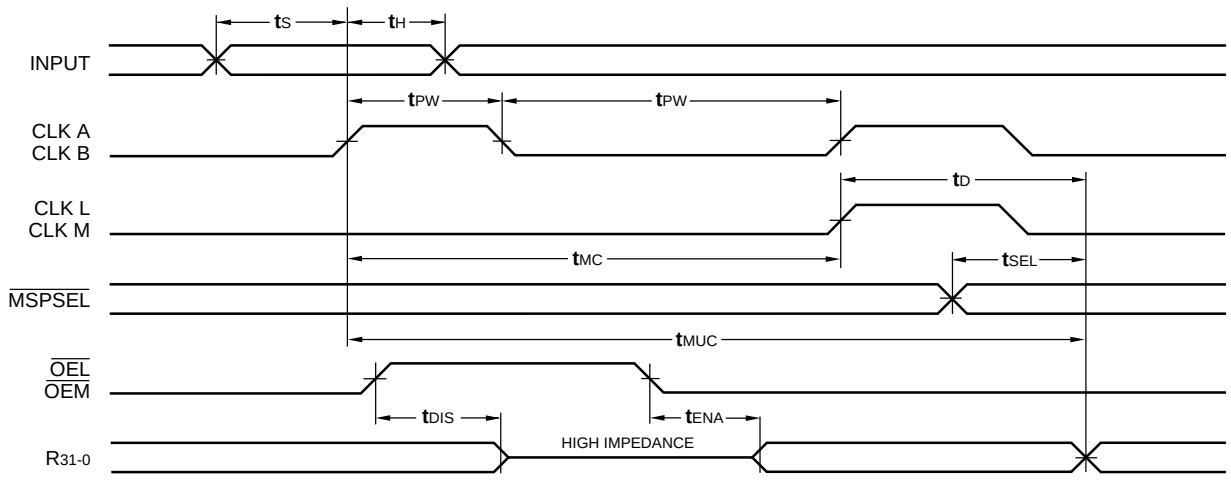

*DISCONTINUED SPEED GRADE

NOTES

1. Maximum Ratings indicate stress specifications only. Functional operation of these products at values beyond those indicated in the Operating Conditions table is not implied. Exposure to maximum rating conditions for extended periods may affect reliability.

2. The products described by this specification include internal circuitry designed to protect the chip from damaging substrate injection currents and accumulations of static charge. Nevertheless, conventional precautions should be observed during storage, handling, and use of these circuits in order to avoid exposure to excessive electrical stress values.

3. This device provides hard clamping of transient undershoot and overshoot. Input levels below ground or above V_{CC} will be clamped beginning at –0.6 V and V_{CC} + 0.6 V. The device can withstand indefinite operation with inputs in the range of –0.5 V to +7.0 V. Device operation will not be adversely affected, however, input current levels will be well in excess of 100 mA.

4. Actual test conditions may vary from those designated but operation is guaranteed as specified.

5. Supply current for a given application can be accurately approximated by:

$$\frac{NCV^2F}{4}$$

where

N = total number of device outputs
C = capacitive load per output
V = supply voltage
F = clock frequency

6. Tested with all outputs changing every cycle and no load, at a 5 MHz clock rate.

7. Tested with all inputs within 0.1 V of V_{CC} or Ground, no load.

8. These parameters are guaranteed but not 100% tested.

9. AC specifications are tested with input transition times less than 3 ns, output reference levels of 1.5 V (except t_{DIS} test), and input levels of nominally 0 to 3.0 V. Output loading may be a resistive divider which provides for specified I_{OH} and I_{OL} at an output voltage of V_{OH} min and V_{OL} max respectively. Alternatively, a diode bridge with upper and lower current sources of I_{OH} and I_{OL} respectively, and a balancing voltage of 1.5 V may be used. Parasitic capacitance is 30 pF minimum, and may be distributed.

This device has high-speed outputs capable of large instantaneous current pulses and fast turn-on/turn-off times. As a result, care must be exercised in the testing of this device. The following measures are recommended:

a. A 0.1 µF ceramic capacitor should be installed between V_{CC} and Ground leads as close to the Device Under Test (DUT) as possible. Similar capacitors should be installed between device V_{CC} and the tester common, and device ground and tester common.

b. Ground and V_{CC} supply planes must be brought directly to the DUT socket or contactor fingers.

c. Input voltages should be adjusted to compensate for inductive ground and V_{CC} noise to maintain required DUT input levels relative to the DUT ground pin.

10. Each parameter is shown as a minimum or maximum value. Input requirements are specified from the point of view of the external system driving the chip. Setup time, for example, is specified as a minimum since the external system must supply at least that much time to meet the worst-case requirements of all parts. Responses from the internal circuitry are specified from the point of view of the device. Output delay, for example, is specified as a maximum since worst-case operation of any device always provides data within that time.

11. For the t_{ENA} test, the transition is measured to the 1.5 V crossing point with datasheet loads. For the t_{DIS} test, the transition is measured to the ±200mV level from the measured steady-state output voltage with ±10mA loads. The balancing voltage, V_{TH}, is set at 3.5 V for Z-to-0 and 0-to-Z tests, and set at 0 V for Z-to-1 and 1-to-Z tests.

12. These parameters are only tested at the high temperature extreme, which is the worst case for leakage current.

FIGURE A. OUTPUT LOADING CIRCUIT

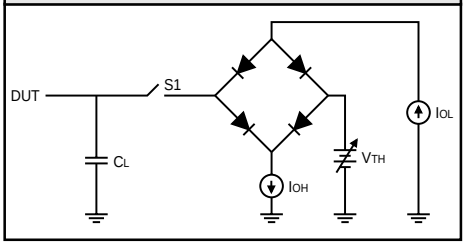

FIGURE B. THRESHOLD LEVELS

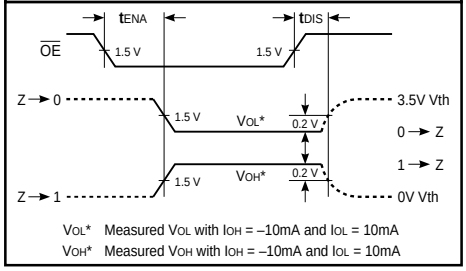

LMU16 — ORDERING INFORMATION

64-pin

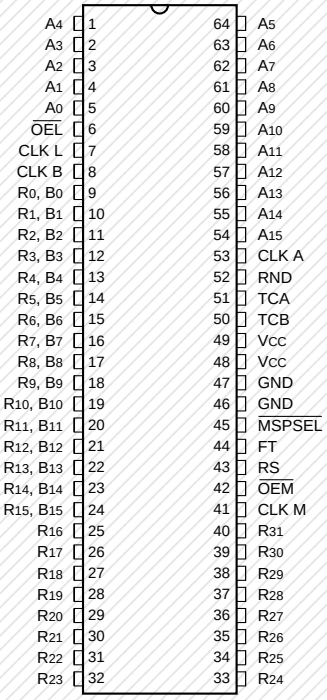

Discontinued Package

68-pin

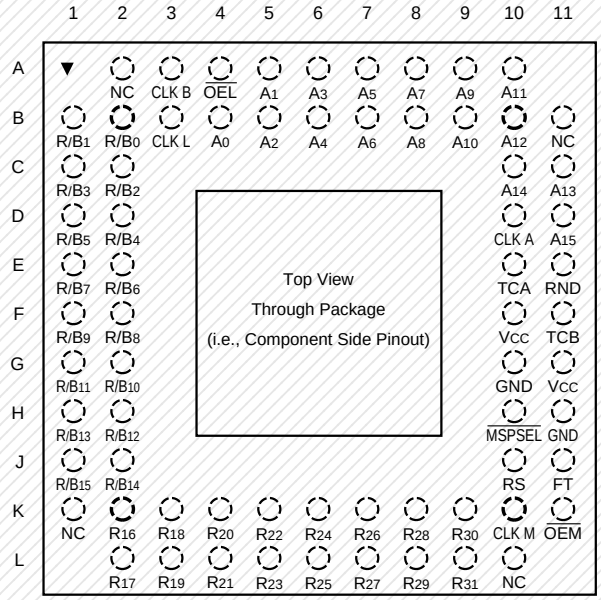

Discontinued Package

Speed	Sidebraze Hermetic DIP (D6)	Ceramic Pin Grid Array (G2)
	0°C to +70°C — COMMERCIAL SCREENING	
	–55°C to +125°C — COMMERCIAL SCREENING	
	–55°C to +125°C — MIL-STD-883 COMPLIANT	

LMU216 — ORDERING INFORMATION

68-pin

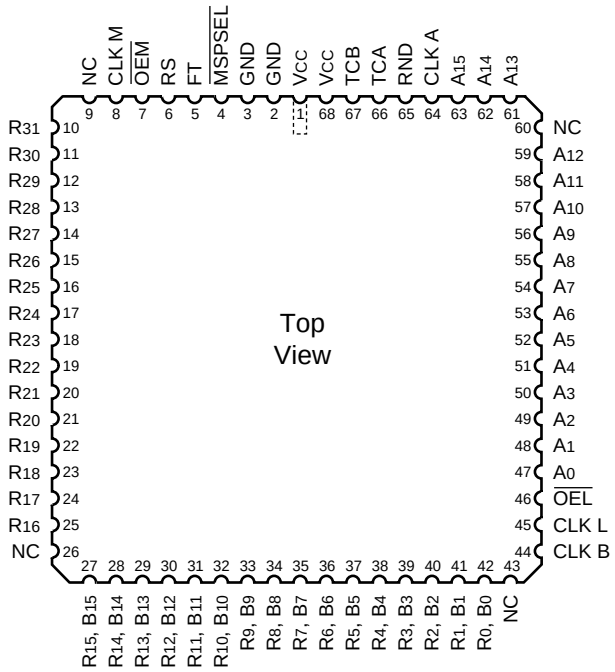

Speed	Plastic J-Lead Chip Carrier (J2)			
	0°C to +70°C — COMMERCIAL SCREENING			
25 ns 20 ns	LMU216JC25 LMU216JC20			
	–55°C to +125°C — COMMERCIAL SCREENING			
	–55°C to +125°C — MIL-STD-883 COMPLIANT			