LMT84-Q1 1.5-V, SC70, Analog Temperature Sensors

1 Features

- LMT84-Q1 is AEC-Q100 Qualified for Automotive Applications:
  - Device Temperature Grade 0: –40°C to +150°C
  - Device HBM ESD Classification Level 2
  - Device CDM ESD Classification Level C6
- Very Accurate: ±0.4°C Typical
- Low 1.5-V Operation
- Average Sensor Gain of -5.5 mV/°C
- Low 5.4-µA Quiescent Current
- Wide Temperature Range: –50°C to 150°C
- Output is Short-Circuit Protected
- Push-Pull Output With ±50-µA Drive Capability
- Footprint Compatible With the Industry-Standard LM20/19 and LM35 Temperature Sensors
- Cost-Effective Alternative to Thermistors

2 Applications

- Automotive
- Infotainment and Cluster
- Powertrain Systems
- Smoke and Heat Detectors
- Drones
- Appliances

Thermal Time Constant

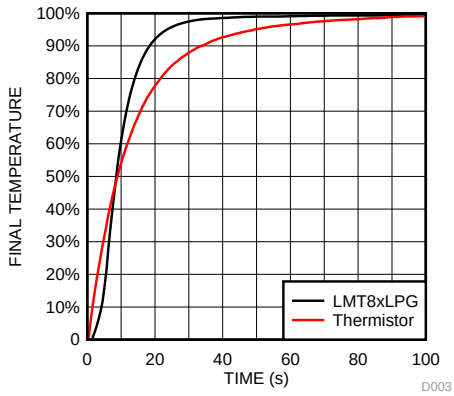

* Fast thermal response NTC

3 Description

The LMT84-Q1 is a precision CMOS temperature sensor with ±0.4°C typical accuracy (±2.7°C maximum) and a linear analog output voltage that is inversely proportional to temperature. The 1.5-V supply voltage operation, 5.4-µA quiescent current, and 0.7-ms power-on time enable effective power-cycling architectures to minimize power consumption for battery-powered applications such as drones and sensor nodes.The LMT84-Q1 device is AEC-Q100 Grade 0 qualified and maintains ±2.7°C maximum accuracy over the full operating temperature range without calibration; this makes the LMT84-Q1 suitable for automotive applications such as infotainment, cluster, and powertrain systems. The accuracy over the wide operating range and other features make the LMT84-Q1 an excellent alternative to thermistors.

For devices with different average sensor gains and comparable accuracy, refer to *Comparable Alternative Devices* for alternative devices in the LMT8x family.

Device Information(1)

PART NUMBER	PACKAGE	BODY SIZE (NOM)
LMT84-Q1	SOT (5)	2.00 mm x 1.25 mm

(1) For all available packages, see the orderable addendum addendum at the end of the data sheet.

Output Voltage vs Temperature

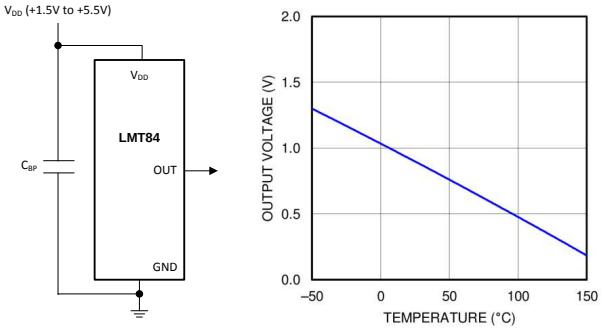

Copyright © 2016, Texas Instruments Incorporated

An IMPORTANT NOTICE at the end of this data sheet addresses availability, warranty, changes, use in safety-critical applications, intellectual property matters and other important disclaimers. PRODUCTION DATA.

Table of Contents

1 Features ... 1
2 Applications ... 1
3 Description ... 1
4 Revision History ... 2
5 Device Comparison Tables ... 3
6 Pin Configuration and Functions ... 3
7 Specifications ... 4
7.1 Absolute Maximum Ratings ... 4
7.2 ESD Ratings ... 4
7.3 Recommended Operating Conditions ... 4
7.4 Thermal Information ... 4
7.5 Accuracy Characteristics ... 5
7.6 Electrical Characteristics ... 5
7.7 Typical Characteristics ... 6
8 Detailed Description ... 8
8.1 Overview ... 8
8.2 Functional Block Diagram ... 8
8.3 Feature Description ... 8
8.4 Device Functional Modes ... 10
9 Application and Implementation ... 12
9.1 Applications Information ... 12
9.2 Typical Applications ... 12
10 Power Supply Recommendations ... 13
11 Layout ... 14
11.1 Layout Guidelines ... 14
11.2 Layout Examples ... 14
12 Device and Documentation Support ... 15
12.1 Receiving Notification of Documentation Updates 15
12.2 Community Resources ... 15
12.3 Trademarks ... 15
12.4 Electrostatic Discharge Caution ... 15
12.5 Glossary ... 15
13 Mechanical, Packaging, and Orderable Information ... 15

4 Revision History

NOTE: Page numbers for previous revisions may differ from page numbers in the current version.

DATE	REVISION	NOTES
October 2017	*	Initial release. Moved the automotive device from the SNIS167 to a standalone data sheet.

Copyright © 2017, Texas Instruments Incorporated

5 Device Comparison Tables

Table 1. Available Device Packages

ORDER NUMBER(1)	PACKAGE	PIN	BODY SIZE (NOM)	MOUNTING TYPE
LMT84DCK	SOT (AKA(2): SC70, DCK)	5	2.00 mm × 1.25 mm	Surface Mount
LMT84LP	TO-92 (AKA(2): LP)	3	4.30 mm × 3.50 mm	Through-hole; straight leads
LMT84LPG	TO-92S (AKA(2): LPG)	3	4.00 mm × 3.15 mm	Through-hole; straight leads
LMT84LPM	TO-92 (AKA(2): LPM)	3	4.30 mm × 3.50 mm	Through-hole; formed leads
LMT84DCK-Q1	SOT (AKA(2): SC70, DCK)	5	2.00 mm × 1.25 mm	Surface Mount

(1) For all available packages and complete order numbers, see the Package Option addendum at the end of the data sheet.
(2) AKA = Also Known As

Table 2. Comparable Alternative Devices

DEVICE NAME	AVERAGE OUTPUT SENSOR GAIN	POWER SUPPLY RANGE
LMT84-Q1	–5.5 mV/°C	1.5 V to 5.5 V
LMT85-Q1	–8.2 mV/°C	1.8 V to 5.5 V
LMT86-Q1	–10.9 mV/°C	2.2 V to 5.5 V
LMT87-Q1	–13.6 mV/°C	2.7 V to 5.5 V

6 Pin Configuration and Functions

DCK Package
5-Pin SOT (SC70)
(Top View)

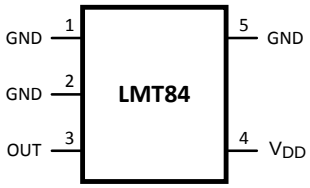

Pin Functions

PIN		TYPE	DESCRIPTION	
NAME	SOT (SC70)		EQUIVALENT CIRCUIT	FUNCTION
GND	1, 2(1) , 5	Ground	N/A	Power Supply Ground
OUT	3	Analog Output	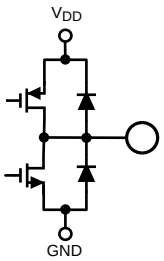	Outputs a voltage that is inversely proportional to temperature
V_{DD}	4	Power	N/A	Positive Supply Voltage

(1) Direct connection to the back side of the die

7 Specifications

7.1 Absolute Maximum Ratings

See [1][2]

	MIN	MAX	UNIT
Supply voltage	–0.3	6	V
Voltage at output pin	–0.3	(V_{DD} + 0.5)	V
Output current	–7	7	mA
Input current at any pin[3]	–5	5	mA
Maximum junction temperature (T_{JMAX})		150	°C
Storage temperature T_{stg}	–65	150	°C

(1) Stresses beyond those listed under *Absolute Maximum Ratings* may cause permanent damage to the device. These are stress ratings only, which do not imply functional operation of the device at these or any other conditions beyond those indicated under *Recommended Operating Conditions*. Exposure to absolute-maximum-rated conditions for extended periods may affect device reliability.
(2) *Soldering process must comply with Reflow Temperature Profile specifications. Refer to* www.ti.com/packaging.
(3) When the input voltage (V_I) at any pin exceeds power supplies (V_I < GND or V_I > V), the current at that pin should be limited to 5 mA.

7.2 ESD Ratings

			VALUE	UNIT
LMT84DCK-Q1 in SC70 package				
$V_{(ESD)}$	Electrostatic discharge	Human-body model (HBM), per AEC Q100-002[1]	±2500	V
		Charged-device model (CDM), per AEC Q100-011	±1000	

(1) AEC Q100-002 indicates that HBM stressing shall be in accordance with the ANSI/ESDA/JEDEC JS-001 specification.

7.3 Recommended Operating Conditions

	MIN	MAX	UNIT
Specified temperature	$T_{MIN} \le T_A \le T_{MAX}$		°C
	$-50 \le T_A \le 150$		°C
Supply voltage (V_{DD})	1.5	5.5	V

7.4 Thermal Information[1]

THERMAL METRIC[2]		LMT84-Q1 DCK (SOT/SC70) 5 PINS	UNIT
$R_{\theta JA}$	Junction-to-ambient thermal resistance [3][4]	275	°C/W
$R_{\theta JC(top)}$	Junction-to-case (top) thermal resistance	84	°C/W
$R_{\theta JB}$	Junction-to-board thermal resistance	56	°C/W
ψ_{JT}	Junction-to-top characterization parameter	1.2	°C/W
ψ_{JB}	Junction-to-board characterization parameter	55	°C/W

(1) For information on self-heating and thermal response time, see section *Mounting and Thermal Conductivity*.
(2) For more information about traditional and new thermal metrics, see the *IC Package Thermal Metrics* application report.
(3) The junction to ambient thermal resistance ($R_{\theta JA}$) under natural convection is obtained in a simulation on a JEDEC-standard, High-K board as specified in JESD51-7, in an environment described in JESD51-2. Exposed pad packages assume that thermal vias are included in the PCB, per JESD 51-5.
(4) Changes in output due to self-heating can be computed by multiplying the internal dissipation by the thermal resistance.

Copyright © 2017, Texas Instruments Incorporated

7.5 Accuracy Characteristics

These limits do not include DC load regulation. These stated accuracy limits are with reference to the values in Table 3.

PARAMETER	TEST CONDITIONS	MIN(1)	TYP(2)	MAX(1)	UNIT
Temperature accuracy (3)	70°C to 150°C; V_{DD} = 1.5 V to 5.5 V	–2.7	±0.6	2.7	°C
	0°C to 70°C; V_{DD} = 1.5 V to 5.5 V	–2.7	±0.9	2.7	°C
	–50°C to +0°C; V_{DD} = 1.6 V to 5.5 V	–2.7	±0.9	2.7	°C
	–50°C to +150°C; V_{DD} = 2.3 V to 5.5 V		±0.4		°C

(1) Limits are specified to TI's AOQL (Average Outgoing Quality Level).
(2) Typicals are at $T_J = T_A$ = 25°C and represent most likely parametric norm.
(3) Accuracy is defined as the error between the measured and reference output voltages, tabulated in Table 3 at the specified conditions of supply gain setting, voltage, and temperature (expressed in °C). Accuracy limits include line regulation within the specified conditions. Accuracy limits do not include load regulation; they assume no DC load.

7.6 Electrical Characteristics

Unless otherwise noted, these specifications apply for V_{DD} = +1.5 V to +5.5 V. minimum and maximum limits apply for $T_A = T_J = T_{MIN}$ to T_{MAX}; typical values apply for $T_A = T_J$ = 25°C.

PARAMETER		TEST CONDITIONS	MIN(1)	TYP(2)	MAX (1)	UNIT
	Sensor gain			–5.5		mV/°C
	Load regulation (3)	Source ≤ 50 µA, ($V_{DD} – V_{OUT}$) ≥ 200 mV	–1	–0.22		mV
		Sink ≤ 50 µA, V_{OUT} ≥ 200 mV		0.26	1	mV
	Line regulation (4)			200		µV/V
I_S	Supply current	T_A = 30°C to 150°C, ($V_{DD} – V_{OUT}$) ≥ 100 mV		5.4	8.1	µA
		T_A = –50°C to 150°C, ($V_{DD} – V_{OUT}$) ≥ 100 mV		5.4	9	µA
C_L	Output load capacitance			1100		pF
	Power-on time (5)	C_L= 0 pF to 1100 pF		0.7	1.9	ms
	Output drive			±50		µA

(1) Limits are specific to TI's AOQL (Average Outgoing Quality Level).
(2) Typicals are at $T_J = T_A$ = 25°C and represent most likely parametric norm.
(3) Source currents are flowing out of the LMT84-xx. Sink currents are flowing into the LMT84-xx.
(4) Line regulation (DC) is calculated by subtracting the output voltage at the highest supply voltage from the output voltage at the lowest supply voltage. The typical DC line regulation specification does not include the output voltage shift discussed in *Output Voltage Shift*.
(5) Specified by design and characterization.

Copyright © 2017, Texas Instruments Incorporated

7.7 Typical Characteristics

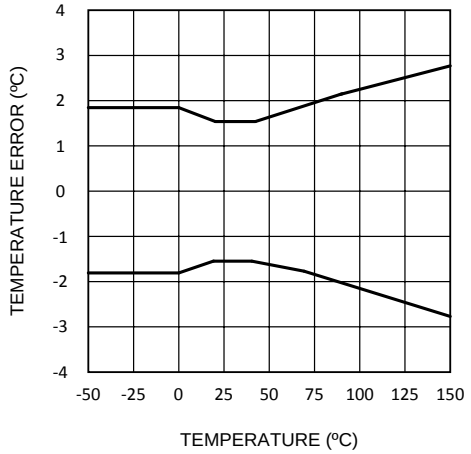

Figure 1. Temperature Error vs Temperature

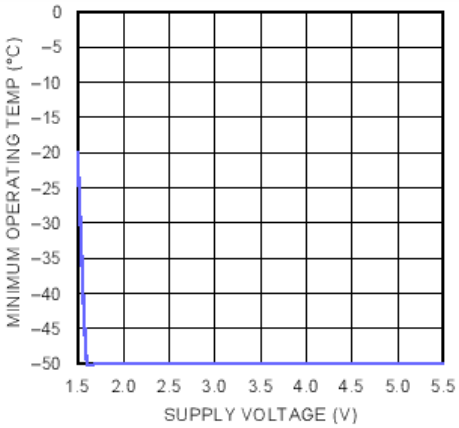

Figure 2. Minimum Operating Temperature vs Supply Voltage

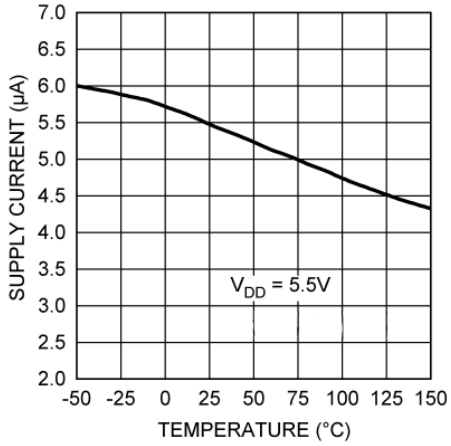

Figure 3. Supply Current vs Temperature

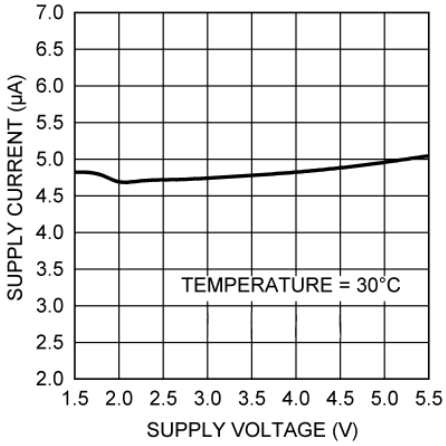

Figure 4. Supply Current vs Supply Voltage

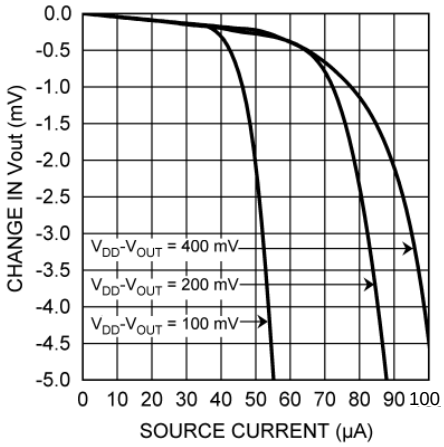

Figure 5. Load Regulation, Sourcing Current

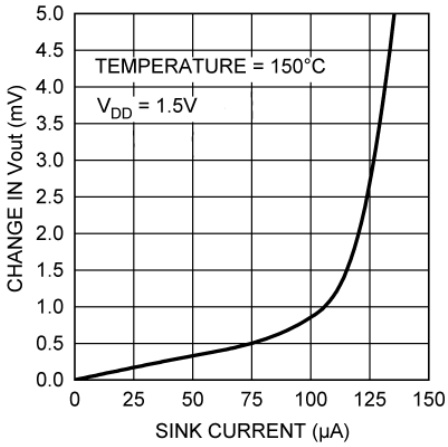

Figure 6. Load Regulation, Sinking Current

Copyright © 2017, Texas Instruments Incorporated

Typical Characteristics (continued)

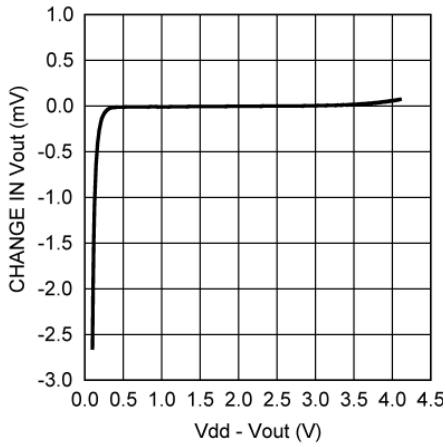

Figure 7. Change in Vout vs Overhead Voltage

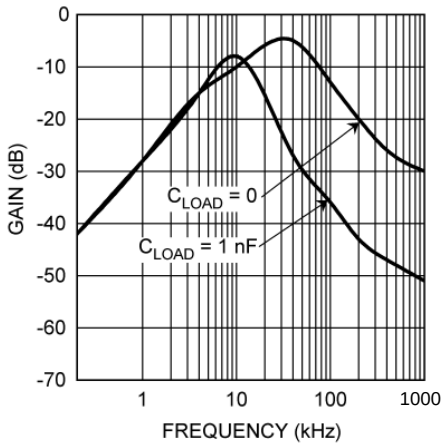

Figure 8. Supply-Noise Gain vs Frequency

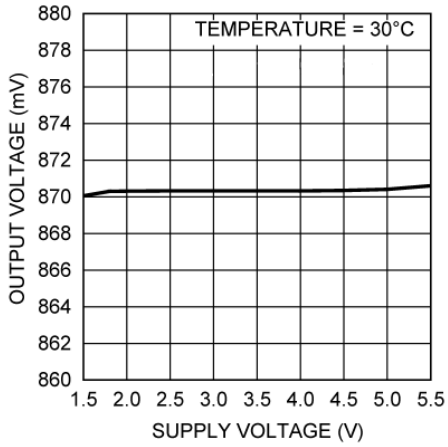

Figure 9. Output Voltage vs Supply Voltage

8 Detailed Description

8.1 Overview

The LMT84-Q1 is an analog output temperature sensor. The temperature-sensing element is comprised of a simple base emitter junction that is forward biased by a current source. The temperature-sensing element is then buffered by an amplifier and provided to the OUT pin. The amplifier has a simple push-pull output stage thus providing a low impedance output source.

8.2 Functional Block Diagram

Full-Range Celsius Temperature Sensor (−50°C to +150°C)

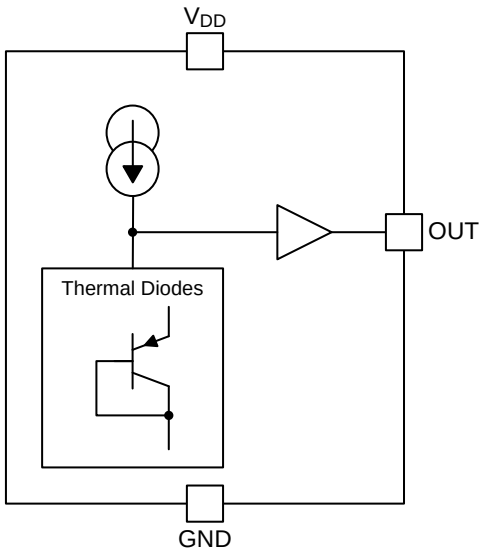

8.3 Feature Description

8.3.1 LMT84 Transfer Function

The output voltage of the LMT84-Q1, across the complete operating temperature range, is shown in Table 3. This table is the reference from which the LMT84-Q1 accuracy specifications (listed in the *Accuracy Characteristics* section) are determined. This table can be used, for example, in a host processor look-up table. A file containing this data is available for download at the LMT84-Q1 product folder under *Tools and Software Models*.

Table 3. LMT84-Q1 Transfer Table

TEMP (°C)	V_{OUT} (mV)	TEMP (°C)	V_{OUT} (mV)	TEMP (°C)	V_{OUT} (mV)	TEMP (°C)	V_{OUT} (mV)	TEMP (°C)	V_{OUT} (mV)
–50	1299	-10	1088	30	871	70	647	110	419
–49	1294	-9	1082	31	865	71	642	111	413
–48	1289	-8	1077	32	860	72	636	112	407
–47	1284	-7	1072	33	854	73	630	113	401
–46	1278	-6	1066	34	849	74	625	114	396
–45	1273	-5	1061	35	843	75	619	115	390
–44	1268	-4	1055	36	838	76	613	116	384
–43	1263	-3	1050	37	832	77	608	117	378
–42	1257	-2	1044	38	827	78	602	118	372
–41	1252	-1	1039	39	821	79	596	119	367
–40	1247	0	1034	40	816	80	591	120	361
–39	1242	1	1028	41	810	81	585	121	355

Copyright © 2017, Texas Instruments Incorporated

Feature Description (continued)

Table 3. LMT84-Q1 Transfer Table (continued)

TEMP (°C)	V_{OUT} (mV)	TEMP (°C)	V_{OUT} (mV)	TEMP (°C)	V_{OUT} (mV)	TEMP (°C)	V_{OUT} (mV)	TEMP (°C)	V_{OUT} (mV)
–38	1236	2	1023	42	804	82	579	122	349
–37	1231	3	1017	43	799	83	574	123	343
–36	1226	4	1012	44	793	84	568	124	337
–35	1221	5	1007	45	788	85	562	125	332
–34	1215	6	1001	46	782	86	557	126	326
–33	1210	7	996	47	777	87	551	127	320
–32	1205	8	990	48	771	88	545	128	314
–31	1200	9	985	49	766	89	539	129	308
–30	1194	10	980	50	760	90	534	130	302
–29	1189	11	974	51	754	91	528	131	296
–28	1184	12	969	52	749	92	522	132	291
–27	1178	13	963	53	743	93	517	133	285
–26	1173	14	958	54	738	94	511	134	279
–25	1168	15	952	55	732	95	505	135	273
–24	1162	16	947	56	726	96	499	136	267
–23	1157	17	941	57	721	97	494	137	261
–22	1152	18	936	58	715	98	488	138	255
–21	1146	19	931	59	710	99	482	139	249
–20	1141	20	925	60	704	100	476	140	243
–19	1136	21	920	61	698	101	471	141	237
–18	1130	22	914	62	693	102	465	142	231
–17	1125	23	909	63	687	103	459	143	225
–16	1120	24	903	64	681	104	453	144	219
–15	1114	25	898	65	676	105	448	145	213
–14	1109	26	892	66	670	106	442	146	207
–13	1104	27	887	67	664	107	436	147	201
–12	1098	28	882	68	659	108	430	148	195
–11	1093	29	876	69	653	109	425	149	189
								150	183

Although the LMT84-Q1 is very linear, the response does have a slight umbrella parabolic shape. This shape is very accurately reflected in Table 3. The transfer table can be calculated by using the parabolic equation (Equation 1).

$$V_{TEMP}(mV) = 870.6mV - \left[5.506\frac{mV}{°C}(T - 30°C)\right] - \left[0.00176\frac{mV}{°C^2}(T - 30°C)^2\right] \quad (1)$$

The parabolic equation is an approximation of the transfer table and the accuracy of the equation degrades slightly at the temperature range extremes. Equation 1 can be solved for T, resulting in:

$$T = \frac{5.506 - \sqrt{(-5.506)^2 + 4 \times 0.00176 \times (870.6 - V_{TEMP}(mV))}}{2 \times (-0.00176)} + 30 \quad (2)$$

For an even less accurate linear approximation, a line can easily be calculated over the desired temperature range from the table using the two-point equation (Equation 3):

$$V - V_1 = \left(\frac{V_2 - V_1}{T_2 - T_1}\right) \times (T - T_1)$$

where

- V is in mV,
- T is in °C,
- T_1 and V_1 are the coordinates of the lowest temperature,

- and T_2 and V_2 are the coordinates of the highest temperature. (3)

For example, if the user wanted to resolve this equation, over a temperature range of 20°C to 50°C, they would proceed as follows:

$$V - 925\text{ mV} = \left(\frac{760\text{ mV} - 925\text{ mV}}{50^{o}\text{C} - 20^{o}\text{C}}\right) \times (T - 20^{o}\text{C}) \quad (4)$$

$$V - 925\text{ mV} = (-5.50\text{ mV} / {}^{o}\text{C}) \times (T - 20^{o}\text{C}) \quad (5)$$

$$V = (-5.50\text{ mV} / {}^{o}\text{C}) \times T + 1035\text{ mV} \quad (6)$$

Using this method of linear approximation, the transfer function can be approximated for one or more temperature ranges of interest.

8.4 Device Functional Modes

8.4.1 Mounting and Thermal Conductivity

The LMT84-Q1 can be applied easily in the same way as other integrated-circuit temperature sensors. It can be glued or cemented to a surface.

To ensure good thermal conductivity, the backside of the LMT84 die is directly attached to the GND pin. The temperatures of the lands and traces to the other leads of the LMT84-Q1 will also affect the temperature reading.

Alternatively, the LMT84-Q1 can be mounted inside a sealed-end metal tube, and can then be dipped into a bath or screwed into a threaded hole in a tank. As with any IC, the LMT84 and accompanying wiring and circuits must be kept insulated and dry, to avoid leakage and corrosion. This is especially true if the circuit may operate at cold temperatures where condensation can occur. If moisture creates a short circuit from the output to ground or V_{DD}, the output from the LMT84-Q1 will not be correct. Printed-circuit coatings are often used to ensure that moisture cannot corrode the leads or circuit traces.

The thermal resistance junction to ambient ($R_{\theta JA}$ or θ_{JA}) is the parameter used to calculate the rise of a device junction temperature due to its power dissipation. Use Equation 7 to calculate the rise in the LMT84-Q1 die temperature:

$$T_J = T_A + \theta_{JA}\left[(V_{DD}I_S) + (V_{DD} - V_O)\, I_L\right]$$

where

- T_A is the ambient temperature,
- I_S is the supply current,
- I_L is the load current on the output,
- and V_O is the output voltage. (7)

For example, in an application where T_A = 30°C, V_{DD} = 5 V, I_S = 5.4 µA, V_{OUT} = 871 mV, and I_L = 2 µA, the junction temperature would be 30.015°C, showing a self-heating error of only 0.015°C. Because the junction temperature of the LMT84 device is the actual temperature being measured, take care to minimize the load current that the LMT84 is required to drive. *Thermal Information*[(1)] shows the thermal resistance of the LMT84-Q1.

8.4.2 Output Noise Considerations

A push-pull output gives the LMT84-Q1 the ability to sink and source significant current. This is beneficial when, for example, driving dynamic loads like an input stage on an analog-to-digital converter (ADC). In these applications the source current is required to quickly charge the input capacitor of the ADC. The LMT84 is ideal for this and other applications which require strong source or sink current.

The LMT84-Q1 supply-noise gain (the ratio of the AC signal on V_{OUT} to the AC signal on V_{DD}) was measured during bench tests. The typical attenuation is shown in Figure 8 found in the *Typical Characteristics* section. A load capacitor on the output can help to filter noise.

For operation in very noisy environments, some bypass capacitance should be present on the supply within approximately 5 centimeters of the LMT84-Q1.

(1) For information on self-heating and thermal response time, see section *Mounting and Thermal Conductivity*.

Copyright © 2017, Texas Instruments Incorporated

Device Functional Modes (continued)

8.4.3 Capacitive Loads

The LMT84-Q1 handles capacitive loading well. In an extremely noisy environment, or when driving a switched sampling input on an ADC, it may be necessary to add some filtering to minimize noise coupling. Without any precautions, the LMT84-Q1 can drive a capacitive load less than or equal to 1100 pF as shown in Figure 10. For capacitive loads greater than 1100 pF, a series resistor may be required on the output, as shown in Figure 11.

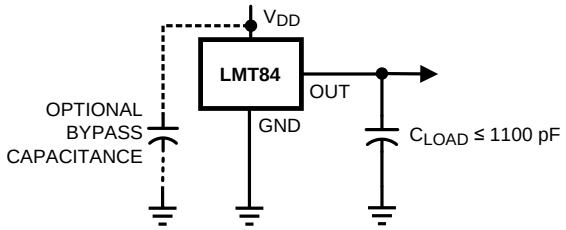

Figure 10. LMT84-Q1 No Decoupling Required for Capacitive Loads Less Than 1100 pF

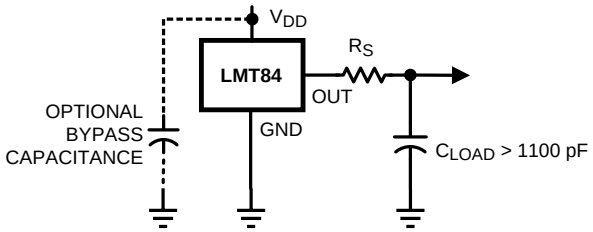

Figure 11. LMT84-Q1 With Series Resistor for Capacitive Loading Greater Than 1100 pF

Table 4. Recommended Series Resistor Values

C_{LOAD}	MINIMUM R_S
1.1 nF to 99 nF	3 kΩ
100 nF to 999 nF	1.5 kΩ
1 µF	800 Ω

8.4.4 Output Voltage Shift

The LMT84-Q1 is very linear over temperature and supply voltage range. Due to the intrinsic behavior of an NMOS or PMOS rail-to-rail buffer, a slight shift in the output can occur when the supply voltage is ramped over the operating range of the device. The location of the shift is determined by the relative levels of V_{DD} and V_{OUT}. The shift typically occurs when $V_{DD} – V_{OUT} = 1$ V.

This slight shift (a few millivolts) takes place over a wide change (approximately 200 mV) in V_{DD} or V_{OUT}. Because the shift takes place over a wide temperature change of 5°C to 20°C, V_{OUT} is always monotonic. The accuracy specifications in the *Accuracy Characteristics* table already include this possible shift.

9 Application and Implementation

NOTE

Information in the following applications sections is not part of the TI component specification, and TI does not warrant its accuracy or completeness. TI's customers are responsible for determining suitability of components for their purposes. Customers should validate and test their design implementation to confirm system functionality.

9.1 Applications Information

The LMT84-Q1 features make it suitable for many general temperature-sensing applications. It can operate down to 1.5-V supply with 5.4-µA power consumption, making it ideal for battery-powered devices.

9.2 Typical Applications

9.2.1 Connection to an ADC

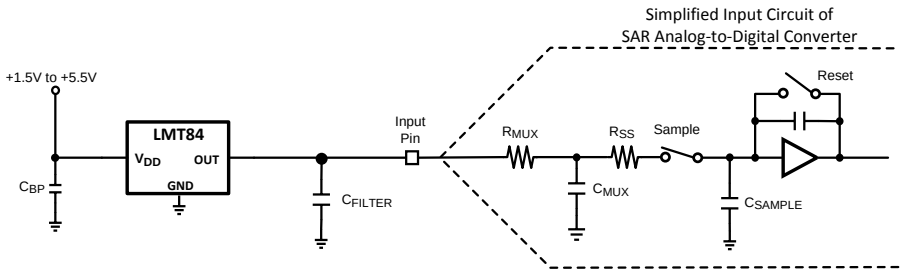

Figure 12. Suggested Connection to a Sampling Analog-to-Digital Converter Input Stage

9.2.1.1 Design Requirements

Most CMOS ADCs found in microcontrollers and ASICs have a sampled data comparator input structure. When the ADC charges the sampling cap, it requires instantaneous charge from the output of the analog source such as the LMT84-Q1 temperature sensor and many op amps. This requirement is easily accommodated by the addition of a capacitor (C_{FILTER}).

9.2.1.2 Detailed Design Procedure

The size of C_{FILTER} depends on the size of the sampling capacitor and the sampling frequency. Because not all ADCs have identical input stages, the charge requirements will vary. This general ADC application is shown as an example only.

9.2.1.3 Application Curve

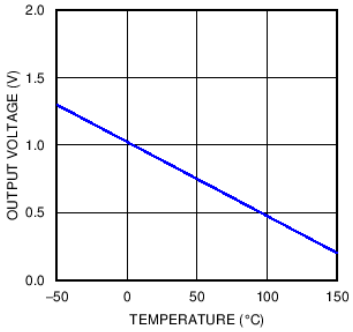

Figure 13. Analog Output Transfer Function

Copyright © 2017, Texas Instruments Incorporated

Typical Applications (continued)

9.2.2 Conserving Power Dissipation With Shutdown

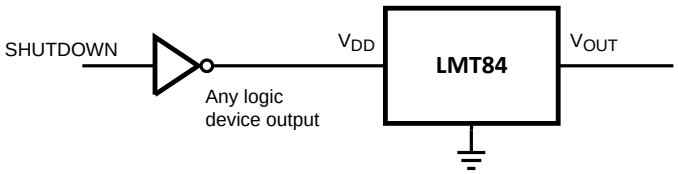

Figure 14. Simple Shutdown Connection of the LMT84-Q1

9.2.2.1 Design Requirements

Because the power consumption of the LMT84-Q1 is less than 9 µA, it can simply be powered directly from any logic gate output and therefore not require a specific shutdown pin. The device can even be powered directly from a microcontroller GPIO. In this way, it can easily be turned off for cases such as battery-powered systems where power savings are critical.

9.2.2.2 Detailed Design Procedure

Simply connect the V_{DD} pin of the LMT84-Q1 directly to the logic shutdown signal from a microcontroller.

9.2.2.3 Application Curves

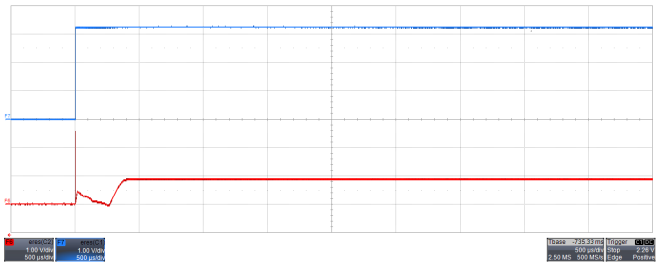

Time: 500 µs/div; Top trace: V_{DD} 1 V/div;
Bottom trace: OUT 1 V/div

Figure 15. Output Turnon Response Time Without a Capacitive Load and V_{DD}= 3.3 V

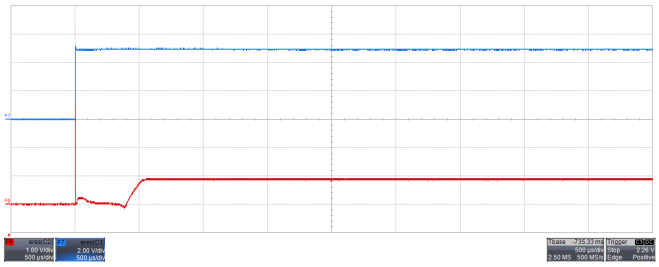

Time: 500 µs/div; Top trace: V_{DD} 2 V/div;
Bottom trace: OUT 1 V/div

Figure 16. Output Turnon Response Time Without a Capacitive Load and V_{DD}= 5 V

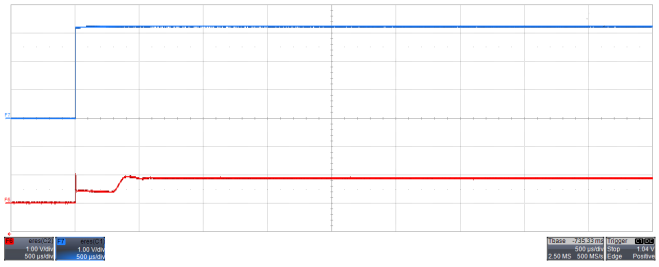

Time: 500 µs/div; Top trace: V_{DD} 1 V/div;
Bottom trace: OUT 1 V/div

Figure 17. Output Turnon Response Time With 1.1-Nf Capacitive Load and V_{DD}= 3.3 V

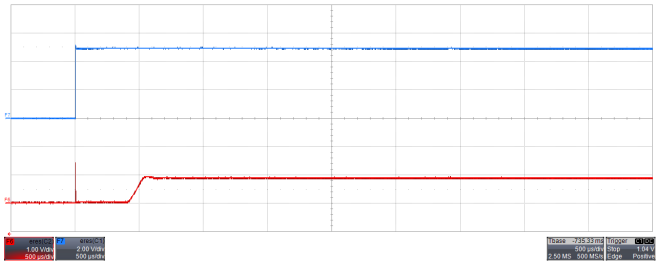

Time: 500 µs/div; Top trace: V_{DD} 2 V/div;
Bottom trace: OUT 1 V/div

Figure 18. Output Turnon Response Time With 1.1-Nf Capacitive Load and V_{DD}= 5 V

10 Power Supply Recommendations

The low supply current and supply range (1.5 V to 5.5 V) of the LMT84-Q1 allow the device to easily be powered from many sources. Power supply bypassing is optional and is mainly dependent on the noise on the power supply used. In noisy systems, it may be necessary to add bypass capacitors to lower the noise that is coupled to the output of the LMT84-Q1.

Copyright © 2017, Texas Instruments Incorporated

11 Layout

11.1 Layout Guidelines

The LMT84-Q1 is extremely simple to layout. If a power-supply bypass capacitor is used, is should be connected as shown in the *Layout Examples*.

11.2 Layout Examples

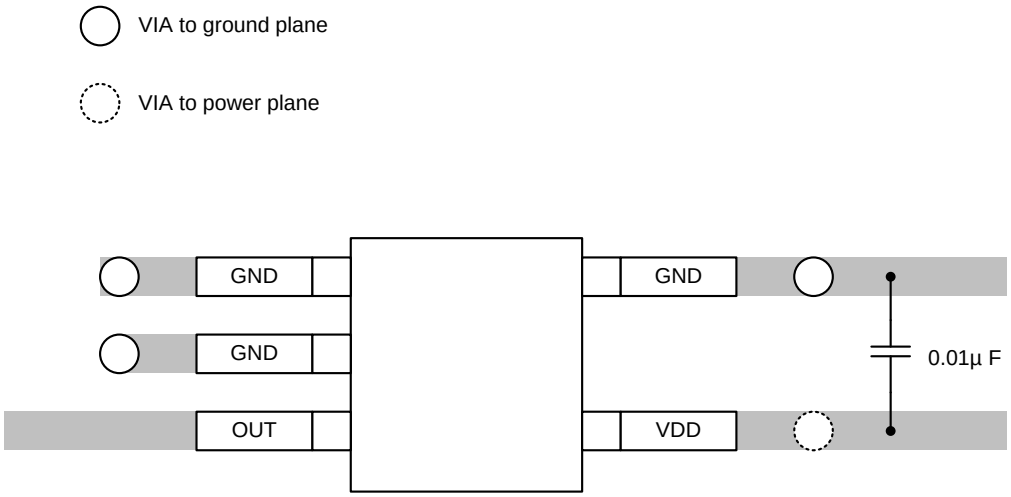

Figure 19. SC70 Package Recommended Layout

Copyright © 2017, Texas Instruments Incorporated

12 Device and Documentation Support

12.1 Receiving Notification of Documentation Updates

To receive notification of documentation updates, navigate to the device product folder on ti.com. In the upper right corner, click on *Alert me* to register and receive a weekly digest of any product information that has changed. For change details, review the revision history included in any revised document.

12.2 Community Resources

The following links connect to TI community resources. Linked contents are provided "AS IS" by the respective contributors. They do not constitute TI specifications and do not necessarily reflect TI's views; see TI's Terms of Use.

TI E2E™ Online Community ***TI's Engineer-to-Engineer (E2E) Community.*** Created to foster collaboration among engineers. At e2e.ti.com, you can ask questions, share knowledge, explore ideas and help solve problems with fellow engineers.

Design Support ***TI's Design Support*** Quickly find helpful E2E forums along with design support tools and contact information for technical support.

12.3 Trademarks

E2E is a trademark of Texas Instruments.
All other trademarks are the property of their respective owners.

12.4 Electrostatic Discharge Caution

These devices have limited built-in ESD protection. The leads should be shorted together or the device placed in conductive foam during storage or handling to prevent electrostatic damage to the MOS gates.

12.5 Glossary

SLYZ022 — *TI Glossary*.

This glossary lists and explains terms, acronyms, and definitions.

13 Mechanical, Packaging, and Orderable Information

The following pages include mechanical, packaging, and orderable information. This information is the most current data available for the designated devices. This data is subject to change without notice and revision of this document. For browser-based versions of this data sheet, refer to the left-hand navigation.

PACKAGING INFORMATION

Orderable Device	Status (1)	Package Type	Package Drawing	Pins	Package Qty	Eco Plan (2)	Lead/Ball Finish (6)	MSL Peak Temp (3)	Op Temp (°C)	Device Marking (4/5)	Samples
LMT84QDCKRQ1	ACTIVE	SC70	DCK	5	3000	Green (RoHS & no Sb/Br)	SN	Level-1-260C-UNLIM	-50 to 150	BOA	Samples
LMT84QDCKTQ1	ACTIVE	SC70	DCK	5	250	Green (RoHS & no Sb/Br)	SN	Level-1-260C-UNLIM	-50 to 150	BOA	Samples

(1) The marketing status values are defined as follows:
ACTIVE: Product device recommended for new designs.
LIFEBUY: TI has announced that the device will be discontinued, and a lifetime-buy period is in effect.
NRND: Not recommended for new designs. Device is in production to support existing customers, but TI does not recommend using this part in a new design.
PREVIEW: Device has been announced but is not in production. Samples may or may not be available.
OBSOLETE: TI has discontinued the production of the device.

(2) **RoHS:** TI defines "RoHS" to mean semiconductor products that are compliant with the current EU RoHS requirements for all 10 RoHS substances, including the requirement that RoHS substance do not exceed 0.1% by weight in homogeneous materials. Where designed to be soldered at high temperatures, "RoHS" products are suitable for use in specified lead-free processes. TI may reference these types of products as "Pb-Free".
RoHS Exempt: TI defines "RoHS Exempt" to mean products that contain lead but are compliant with EU RoHS pursuant to a specific EU RoHS exemption.
Green: TI defines "Green" to mean the content of Chlorine (Cl) and Bromine (Br) based flame retardants meet JS709B low halogen requirements of <=1000ppm threshold. Antimony trioxide based flame retardants must also meet the <=1000ppm threshold requirement.

(3) MSL, Peak Temp. - The Moisture Sensitivity Level rating according to the JEDEC industry standard classifications, and peak solder temperature.

(4) There may be additional marking, which relates to the logo, the lot trace code information, or the environmental category on the device.

(5) Multiple Device Markings will be inside parentheses. Only one Device Marking contained in parentheses and separated by a "~" will appear on a device. If a line is indented then it is a continuation of the previous line and the two combined represent the entire Device Marking for that device.

(6) Lead/Ball Finish - Orderable Devices may have multiple material finish options. Finish options are separated by a vertical ruled line. Lead/Ball Finish values may wrap to two lines if the finish value exceeds the maximum column width.

Important Information and Disclaimer: The information provided on this page represents TI's knowledge and belief as of the date that it is provided. TI bases its knowledge and belief on information provided by third parties, and makes no representation or warranty as to the accuracy of such information. Efforts are underway to better integrate information from third parties. TI has taken and continues to take reasonable steps to provide representative and accurate information but may not have conducted destructive testing or chemical analysis on incoming materials and chemicals. TI and TI suppliers consider certain information to be proprietary, and thus CAS numbers and other limited information may not be available for release.

In no event shall TI's liability arising out of such information exceed the total purchase price of the TI part(s) at issue in this document sold by TI to Customer on an annual basis.

OTHER QUALIFIED VERSIONS OF LMT84-Q1 :

- Catalog: LMT84

NOTE: Qualified Version Definitions:

- Catalog - TI's standard catalog product

TAPE AND REEL INFORMATION

REEL DIMENSIONS

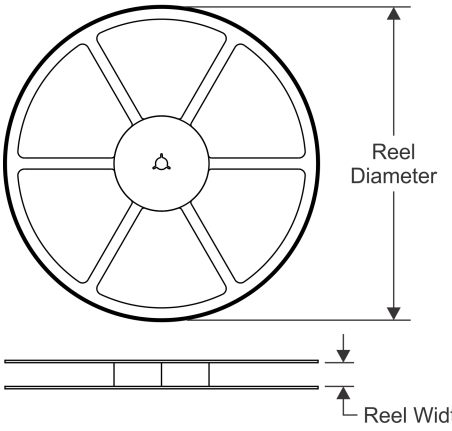

TAPE DIMENSIONS

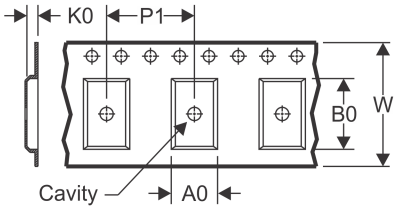

A0	Dimension designed to accommodate the component width
B0	Dimension designed to accommodate the component length
K0	Dimension designed to accommodate the component thickness
W	Overall width of the carrier tape
P1	Pitch between successive cavity centers

QUADRANT ASSIGNMENTS FOR PIN 1 ORIENTATION IN TAPE

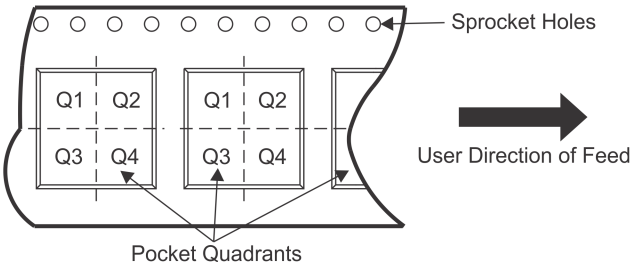

*All dimensions are nominal

Device	Package Type	Package Drawing	Pins	SPQ	Reel Diameter (mm)	Reel Width W1 (mm)	A0 (mm)	B0 (mm)	K0 (mm)	P1 (mm)	W (mm)	Pin1 Quadrant
LMT84QDCKRQ1	SC70	DCK	5	3000	178.0	8.4	2.25	2.45	1.2	4.0	8.0	Q3
LMT84QDCKTQ1	SC70	DCK	5	250	178.0	8.4	2.25	2.45	1.2	4.0	8.0	Q3

TAPE AND REEL BOX DIMENSIONS

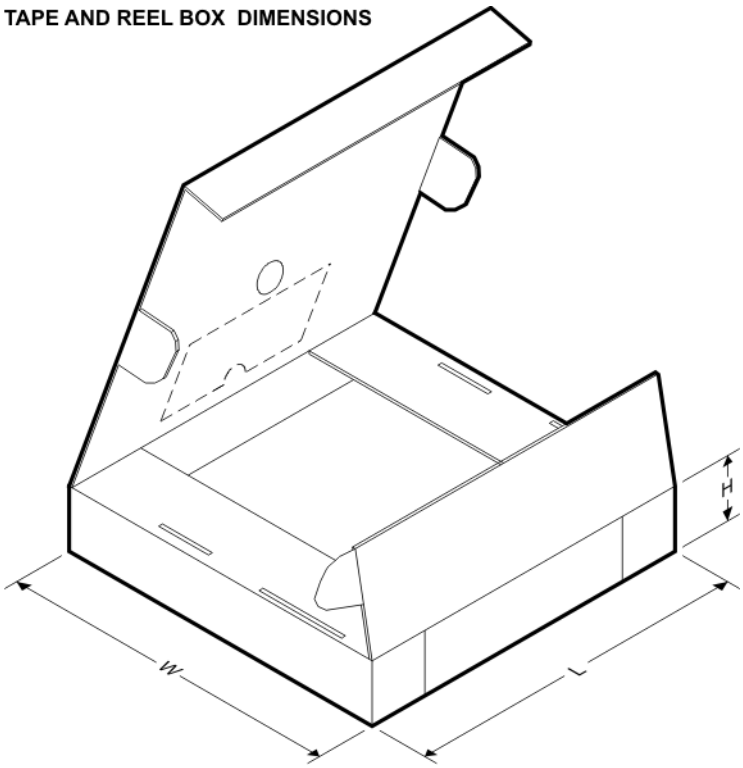

*All dimensions are nominal

Device	Package Type	Package Drawing	Pins	SPQ	Length (mm)	Width (mm)	Height (mm)
LMT84QDCKRQ1	SC70	DCK	5	3000	210.0	185.0	35.0
LMT84QDCKTQ1	SC70	DCK	5	250	210.0	185.0	35.0

DCK (R–PDSO–G5) PLASTIC SMALL–OUTLINE PACKAGE

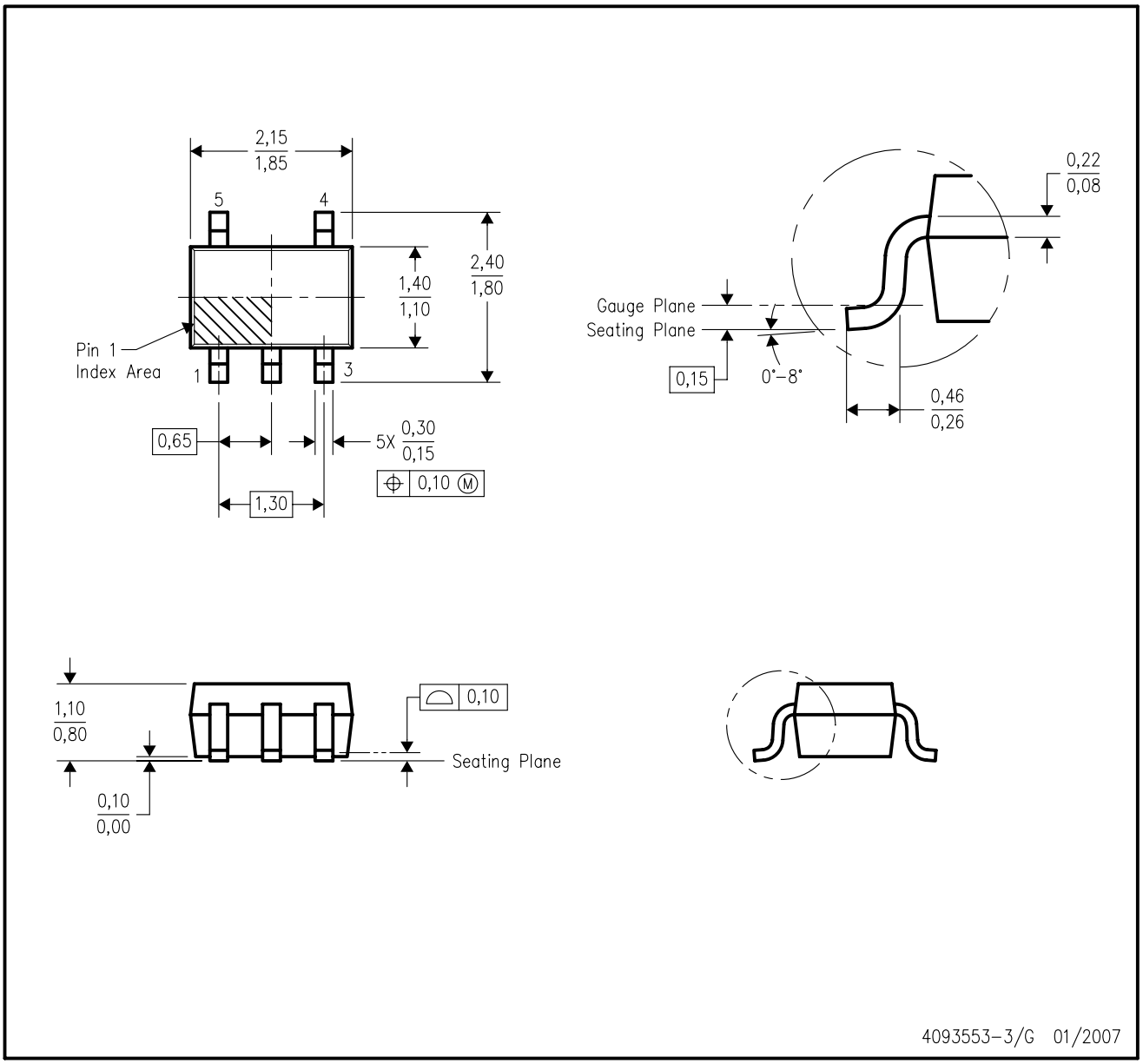

NOTES:
A. All linear dimensions are in millimeters.
B. This drawing is subject to change without notice.
C. Body dimensions do not include mold flash or protrusion. Mold flash and protrusion shall not exceed 0.15 per side.
D. Falls within JEDEC MO–203 variation AA.

DCK (R-PDSO-G5) PLASTIC SMALL OUTLINE

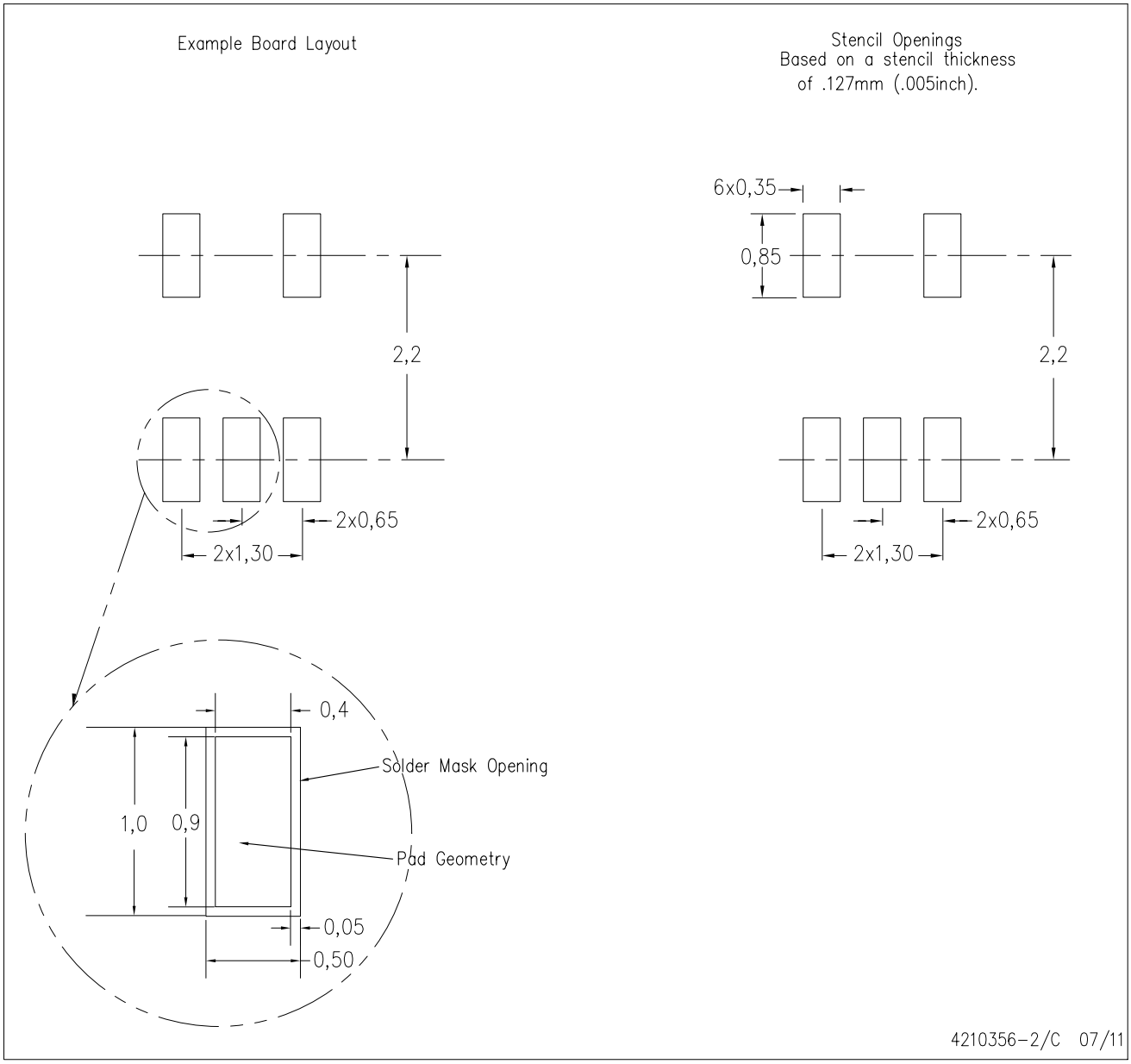

NOTES:
A. All linear dimensions are in millimeters.
B. This drawing is subject to change without notice.
C. Customers should place a note on the circuit board fabrication drawing not to alter the center solder mask defined pad.
D. Publication IPC-7351 is recommended for alternate designs.
E. Laser cutting apertures with trapezoidal walls and also rounding corners will offer better paste release. Customers should contact their board assembly site for stencil design recommendations. Example stencil design based on a 50% volumetric metal load solder paste. Refer to IPC-7525 for other stencil recommendations.

IMPORTANT NOTICE AND DISCLAIMER

TI PROVIDES TECHNICAL AND RELIABILITY DATA (INCLUDING DATASHEETS), DESIGN RESOURCES (INCLUDING REFERENCE DESIGNS), APPLICATION OR OTHER DESIGN ADVICE, WEB TOOLS, SAFETY INFORMATION, AND OTHER RESOURCES “AS IS” AND WITH ALL FAULTS, AND DISCLAIMS ALL WARRANTIES, EXPRESS AND IMPLIED, INCLUDING WITHOUT LIMITATION ANY IMPLIED WARRANTIES OF MERCHANTABILITY, FITNESS FOR A PARTICULAR PURPOSE OR NON-INFRINGEMENT OF THIRD PARTY INTELLECTUAL PROPERTY RIGHTS.

These resources are intended for skilled developers designing with TI products. You are solely responsible for (1) selecting the appropriate TI products for your application, (2) designing, validating and testing your application, and (3) ensuring your application meets applicable standards, and any other safety, security, or other requirements. These resources are subject to change without notice. TI grants you permission to use these resources only for development of an application that uses the TI products described in the resource. Other reproduction and display of these resources is prohibited. No license is granted to any other TI intellectual property right or to any third party intellectual property right. TI disclaims responsibility for, and you will fully indemnify TI and its representatives against, any claims, damages, costs, losses, and liabilities arising out of your use of these resources.

TI’s products are provided subject to TI’s Terms of Sale (www.ti.com/legal/termsofsale.html) or other applicable terms available either on ti.com or provided in conjunction with such TI products. TI’s provision of these resources does not expand or otherwise alter TI’s applicable warranties or warranty disclaimers for TI products.

Mailing Address: Texas Instruments, Post Office Box 655303, Dallas, Texas 75265
Copyright © 2020, Texas Instruments Incorporated