User's Guide for the LMP91050 Evaluation Board with Sensor AFE Software

Table of Contents

1.0. Introduction 1
2.0. Equipment 2
2.1. Connection Diagram 2
2.2. Board Assembly 3
3.0. Quick Start 4
4.0. Powering the LMP91050SDEVAL 11
5.0. Evaluating the LMP91050 without the SPIO-4 Board. 11
6.0. Installing the LMP91050 Sensor AFE Software 12
7.0. Schematic 13
8.0. Layout 14
9.0. BOM 15

1.0. Introduction

The LMP91050 Design Kit (consisting of the LMP91050 Evaluation Board, the SPIO-4 Digital Controller Board, the Sensor AFE software, and this user's guide) is designed to ease evaluation and design-in of Texas Instrument's LMP91050 Configurable AFE for Nondispersive Infrared (NDIR).

Data capturing and evaluations are simplified by connecting the SPIO-4 Digital Controller Board (SPIO-4 board) to a PC via USB and running the Sensor AFE software. The data capture board will generate the SPI signals to communicate to and capture data from the LMP91050. The user will also have the option to evaluate the LMP91050 without using the SPIO-4 board or the Sensor AFE software.

The on board data converter will digitize the LMP91050's analog output, and the software will display these results in time domain and histogram. The software also allows customers to write to and read from registers, to configure the device's gain, output offset, and common mode voltage, and most importantly, to configure and learn about the LMP91050.

This document describes the connection between the boards and PC, and provides a quick start for voltage measurements. This document also describes how to evaluate the LMP91050 with and without the SPIO-4 board and provides the schematic, board layout, and BOM.

© 2011 Texas Instruments Incorporated

2.0. Equipment

1. LMP91050 evaluation board (NSID: LMP91050SDEVAL)
2. SPIO-4 digital controller board (NSID: SPIO-4)
3. Power supplies (optional) to source VDD-EXT or IN_DUT.
4. Multimeter
5. PC with Sensor AFE software
6. NDIR Thermopile Sensor (optional)

2.1. Connection Diagram

Figure 1 shows the connection between the LMP91050 Evaluation Board (LMP91050SDEVAL), SPIO-4 board, and a personal computer with the LMP91050 Sensor AFE software. LMP91050 can be powered using external power supplies or from the SPIO-4 board.

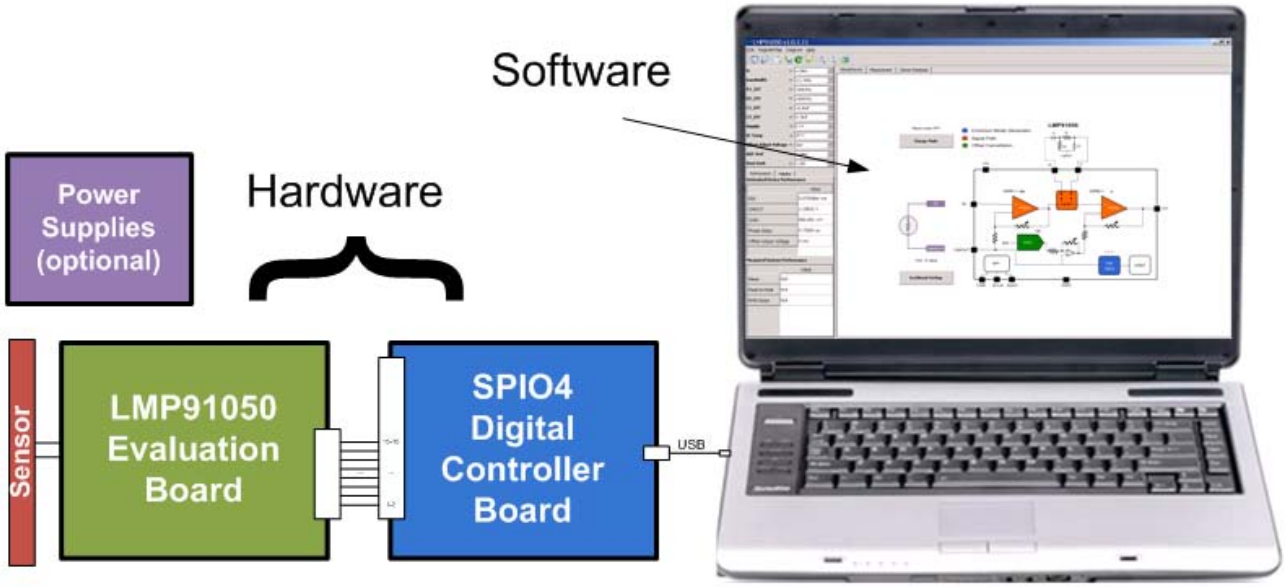

Figure 1 – Connection Diagram

2.2. Board Assembly

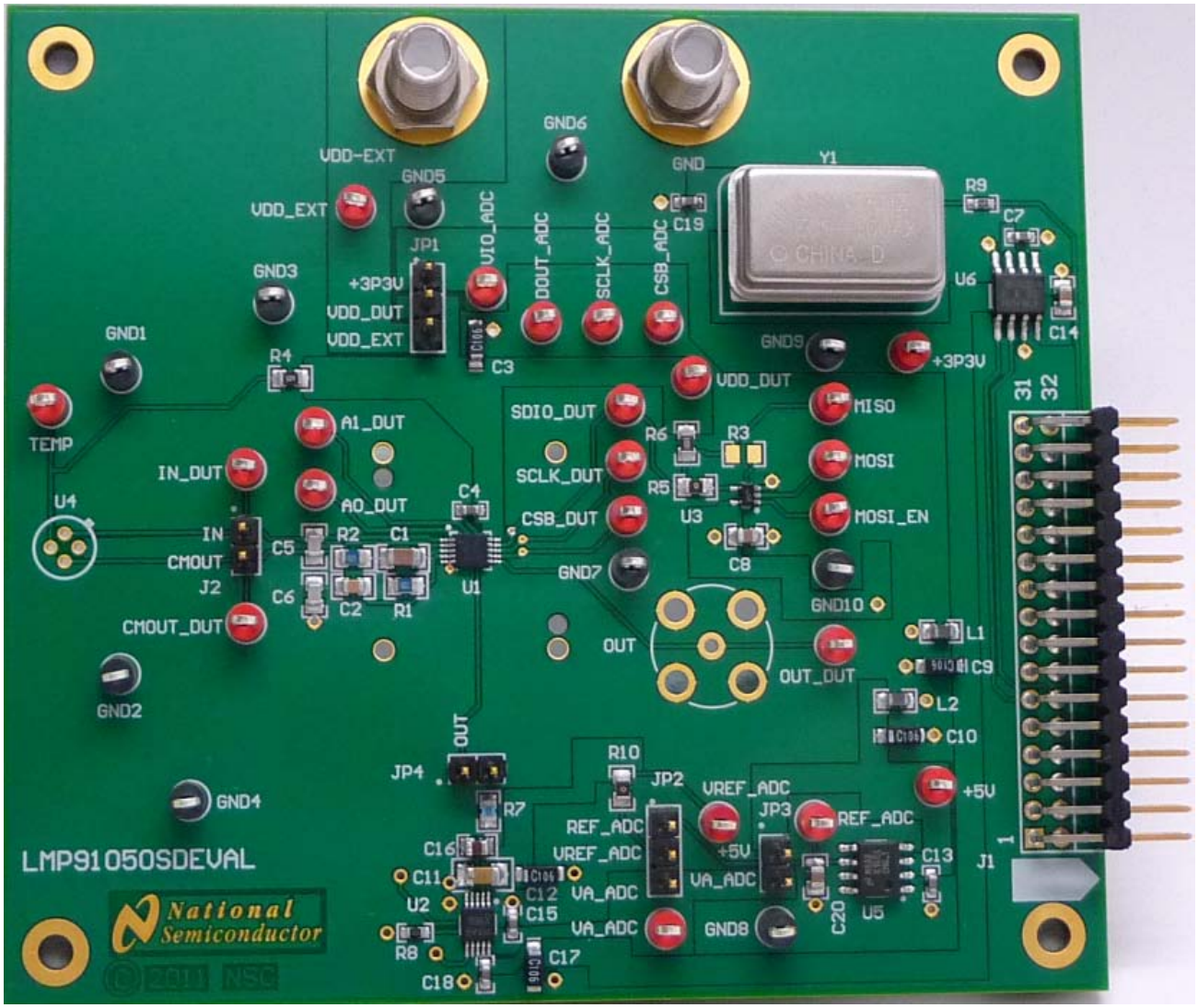

Figure 2 – LMP91050 Evaluation Board Assembly

3.0. Quick Start

The following procedures show a quick method to assemble the LMP91050SDEVAL and perform a quick voltage reading.

A. LMP91050 EVB Jumper Connections

1. The jumpers for this example application can be seen in Figure 3 and Table 1
2. The SPIO-4 board is properly setup out of the box (no assembly required).
3. The schematic for the LMP91050SDEVAL can be seen in Figure 10.

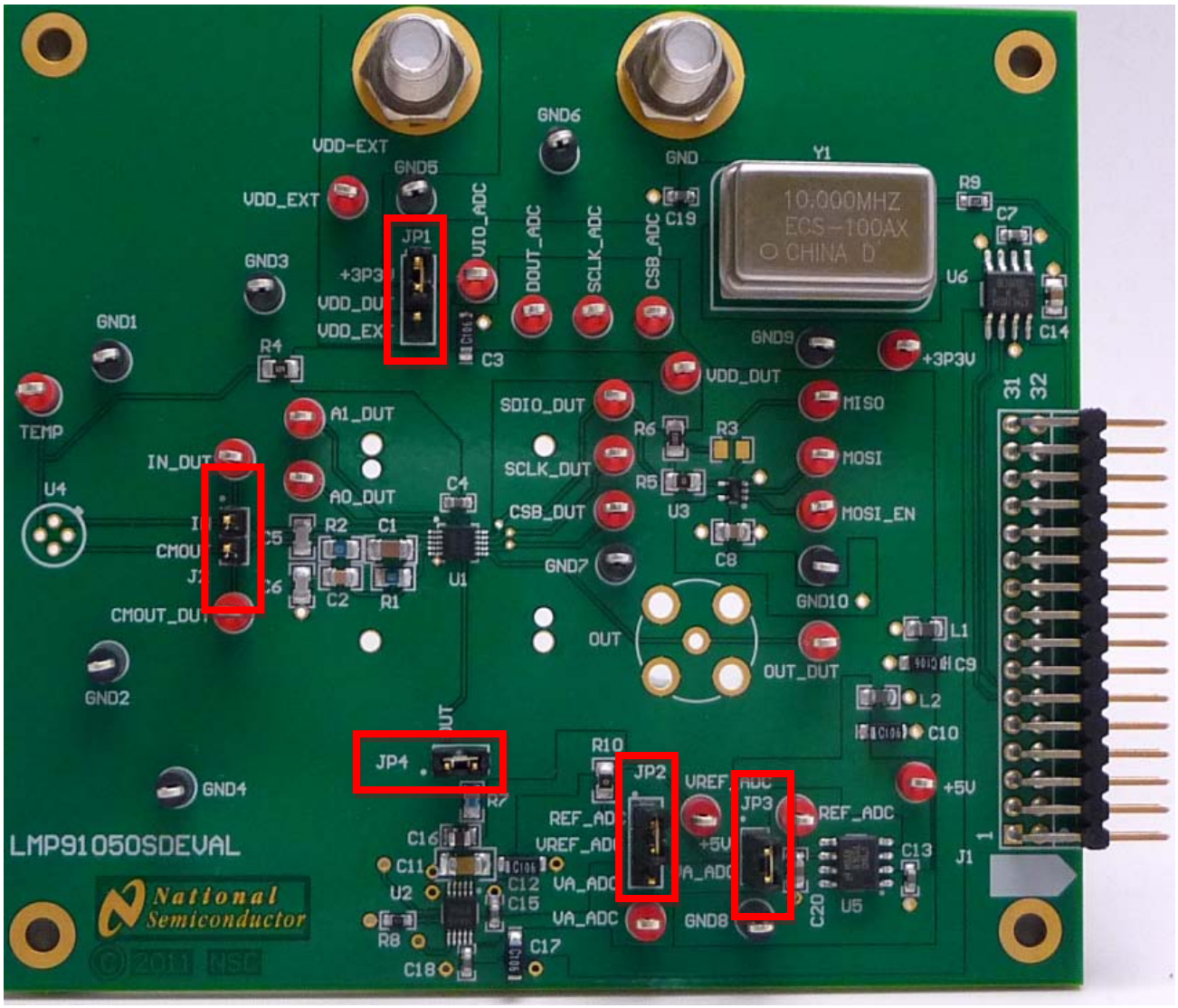

Figure 3 – Jumper Settings (Default) for voltage reading

Jumpers	Pin	Purpose
JP1: VDD_DUT	P1-P2	Connect LMP91050 VDD to +3.3V from SPIO4
JP2: VREF_ADC	P1-P2	Connect ADC VREF to 4.1V from U5 (LM4140)
JP3: VA_ADC	P1-P2	Connect ADC VA to +5V from SPIO4
JP4: OUT_DUT to ADC	P1-P2	Connect LMP91050 OUT to ADC input RC filter
J2: IN to CMOUT	Open	Connect LMP91050 IN to CMOUT. **Note: Board is provided with this jumper open. Use provided jumper to short IN to CMOUT for easy evaluation.**

Table 1 - Jumpers for Voltage Measurement

B. Installing/Opening the Software - follow section 6.0 to install and open the LMP91050 Sensor AFE software.

C. Connecting and Powering the Boards – these steps have to be done in this order.

1. Connect the LMP91050SDEVAL's **J1** to SPIO-4 Board's **J6**. See Figure 4.



Figure 4 – LMP91050SDEVAL-to-SPIO-4 Board Connection

2. Connect SPIO-4 board to a PC via **USB.**
3. Use a multimeter to measure LMP91050SDEVAL's +5V test point; it should be approximately 5V. If it is not, check your power supplies and jumpers. Measure test point VREF_ADC; it should be approximately 4.1V. If it's not, check your jumpers and U5.

© 2011 Texas Instruments Incorporated

D. Sensor AFE Software Overview

Once connection between the boards and PC is established, you can use the software to communicate to and capture data from the LMP91050. Drag cursor over window icons to get an icon description. Some items of interest are shown in Figure 5.

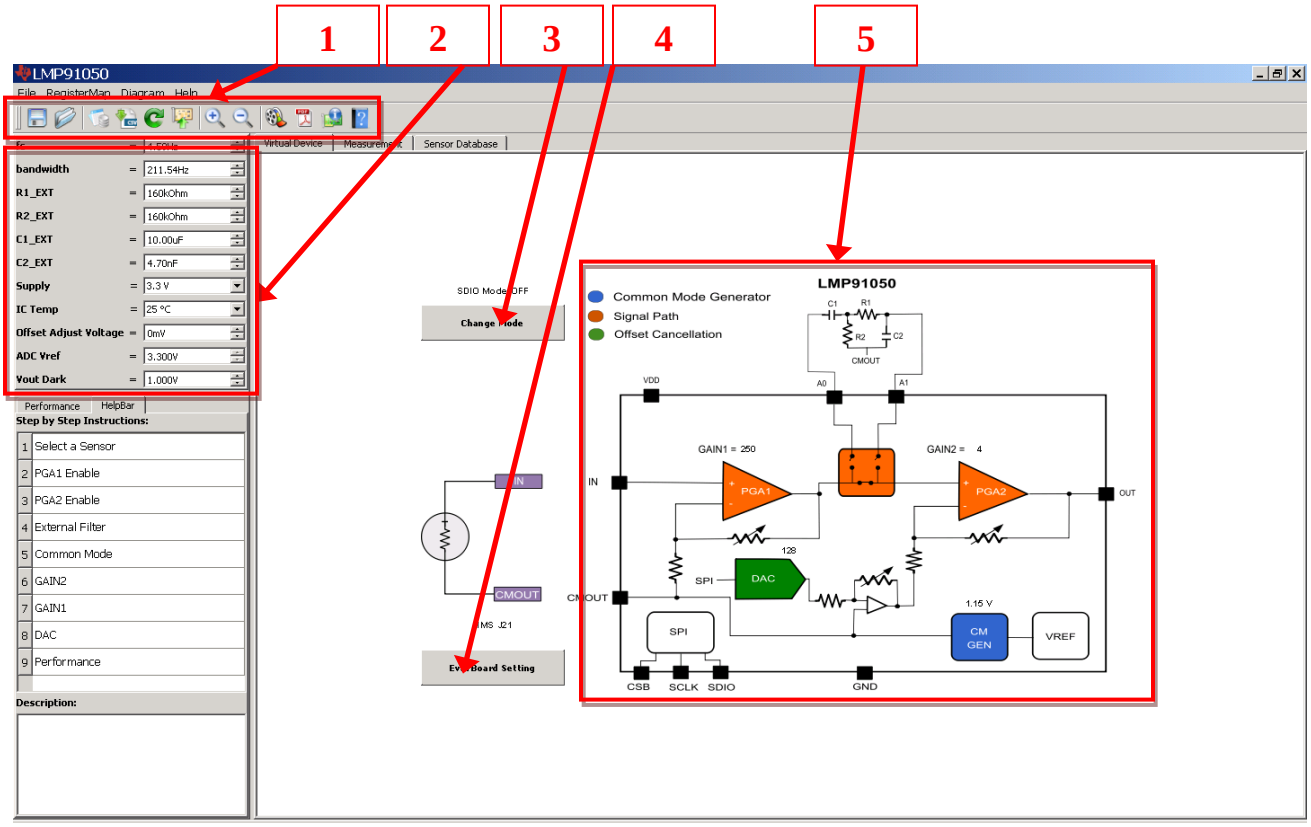

Figure 5 – Sensor AFE Items of Interest

1. Menu Bar Icons (from left to right)
   a. Save Configuration to File: Saves the current configuration settings (register settings) to an .xml file.
   b. Load Configuration File: Loads the selected configuration settings (register settings) .xml file.
   c. Register Map: Opens Register Map window. An alternative to the Virtual Device, for writing and reading the device registers. See datasheet for details on device Register Map.
   d. Save All Registers to File: Saves register contents to a .cvs file.
   e. Read All Register from Board: After configuring the register map, use this button to read all registers. Functional only in SDIO Mode (see Item 3).
   f. Write All Registers To Board: After configuring the register map use this button to write all registers. Registers will not be updated until this step is done.
   g. Zoom In/Out Diagram Image: Zoom in and out of the virtual device image.
   h. Show Tutorial: Takes you to the interactive Software Overview videos.
   i. Documentation: Accesses the LMP91050 Datasheet, SPIO4 User's Guide, or Evaluation Board User's Guide.
2. User Inputs

   a. fc: Center frequency of external bandpass filter.
   b. bandwidth: Pass band bandwidth of external bandpass filter.
   c. R1_EXT, R2_EXT, C1_EXT, C2_EXT: External bandpass filter component values calculated based on user input for center frequency (fc) and pass band (bandwidth) described above.
   d. Supply: LMP91050 supply voltage (VDD).
   e. IC Temp: LMP91050 operating temperature
   f. Offset Adjust Voltage: The tool will calculate the DAC code (decimal) required to achieve this output offset adjust voltage. User must then **Write** to the register to update the value in the NDAC register.
   g. ADC Vref: ADC reference voltage. User should input value measured at VREF_ADC test point. Value used to calculate displayed Output Voltage.
   h. Vout Dark: This value corresponds to the user measured value at the LMP91050 output (OUT) when input is shorted (IN = CMOUT). Tool will use this value to estimate LMP91050 input voltage (IN - CMOUT) on subsequent measurements.
3. Change Mode: Change between device Read Mode OFF (default) and ON. See datasheet for details on SPI Read Mode.
4. Eval Board Setting: Document to show user how to configure jumpers and connect thermopile based on sensor selected.
5. Virtual Device: Drag cursor across color coded blocks and click to configure each block. To update registers **"Write All Registers"** when done.

E. Configuring the LMP91050 Using the Sensor AFE Software

Follow the step-by-step instructions under the **"HelpBar"** mini-tab (left hand side of the GUI) to configure the LMP91050 for this example. These step-by-step instructions are discussed in details below, and the recommended configuration should look similar to Figure 6.

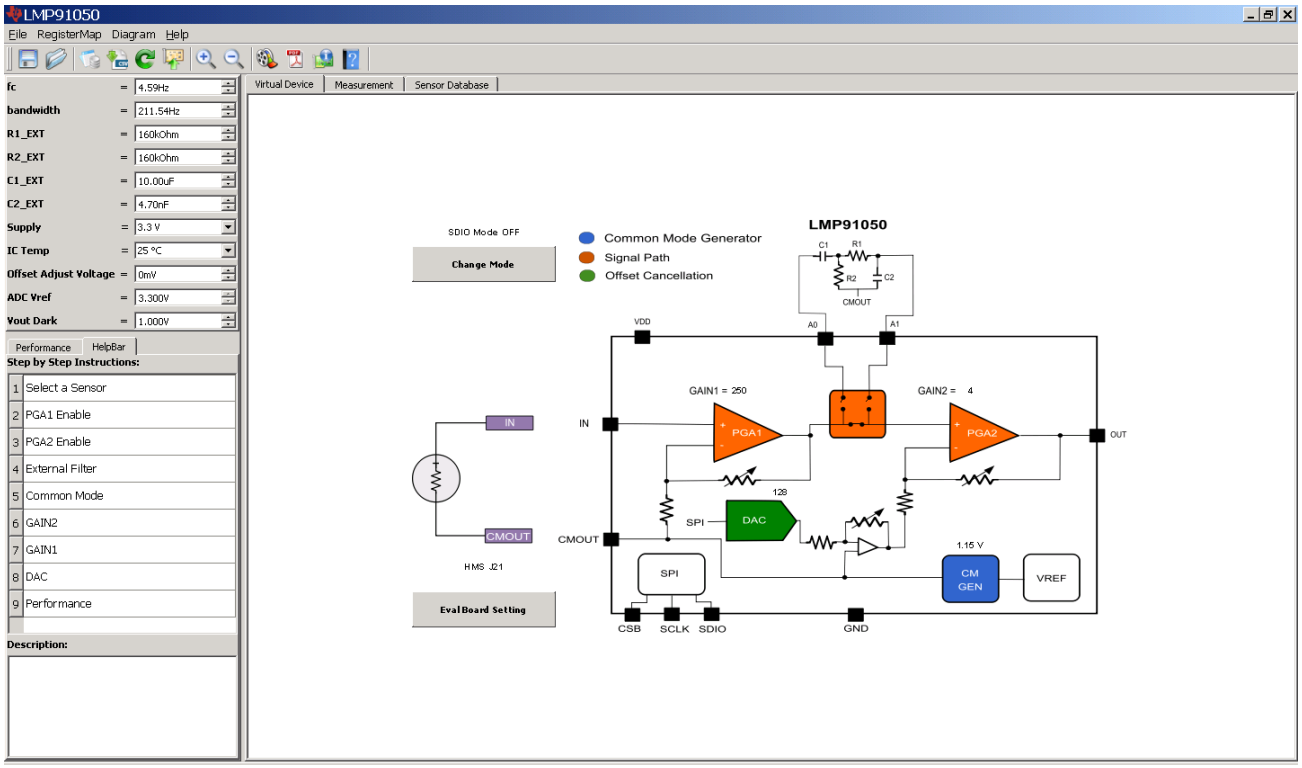

Figure 6 - Recommended LMP91050 Configuration for a voltage Reading

1. Step 1: Select a Sensor – Sensor Database window opens. See Figure 7. Step 1: Click sensor type (Thermopile) and the sensors will show in the bottom table. Step 2: Click sensor and then click **"Select"** button on the left to use this sensor.

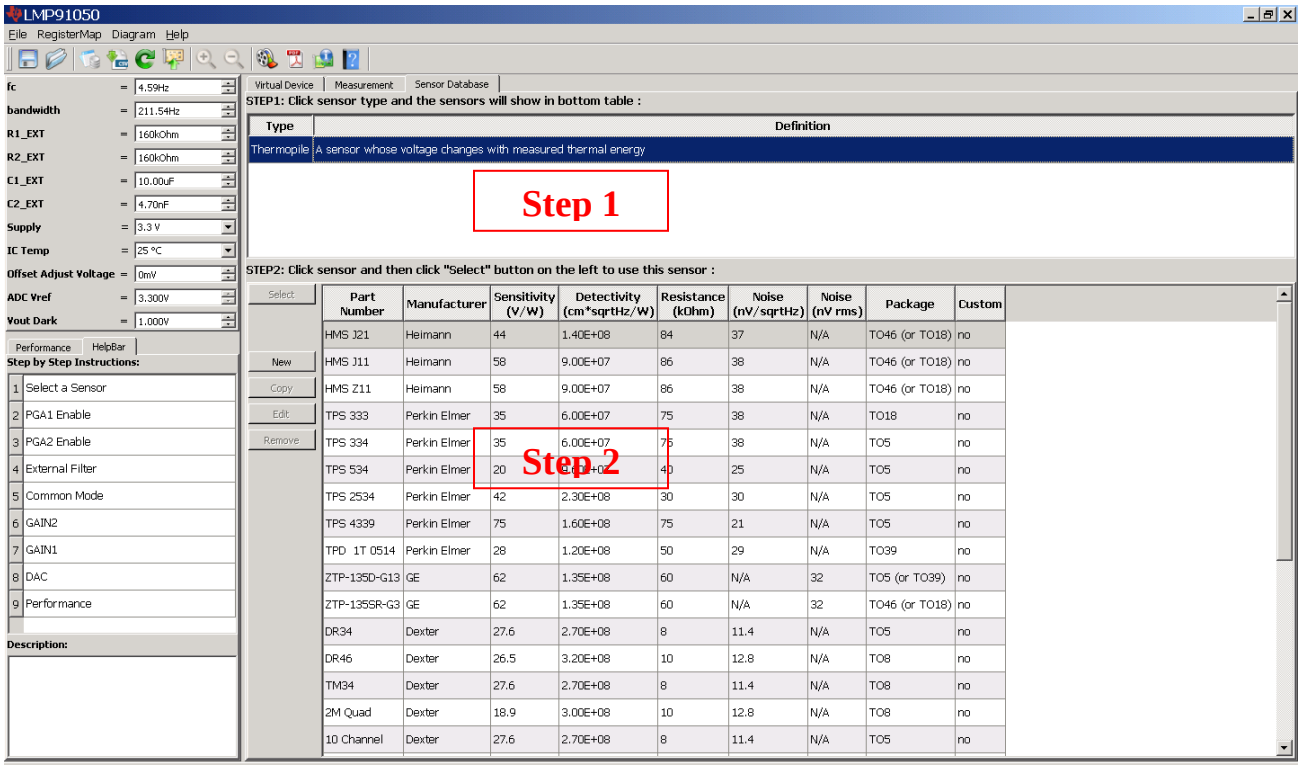

Figure 7 – Sensor Database Window

2. Step 2: PGA1 Enable – click on the **"PGA1"** block to set "**1: PGA1 ON"** . Remember after configuring the register map to use the **Write All Registers** button to update the registers.

3. Step 3: PGA2 Enable – click on the **"PGA2"** block to set "**1: PGA2 ON"** . Note: By default PGA1 and PGA2 are OFF on power up. However the software was designed to automatically power ON PGA1 and PGA2 for ease of use.

4. Step 4: External Filter – click on the switch block to choose **"0: PGA1 to PGA2 direct"** (default).

5. Step 5: Common Mode – click on the "**CM GEN"** block to set **"0: 1.15V"** (default).

6. Step 6: GAIN 2 – click on the "**PGA2"** block to set **"00: 4"** (default).

7. Step 7: GAIN 1 – click on the "**PGA1"** block to set **"0: 250"** (default).

8. Step 8: DAC (Output Offset) – click on the "**DAC"** block to set **"128"** (default) for 0 mV offset. Alternatively, user can also use the Offset Adjust Voltage user input field to input 0 mV.

9. Step 9: Performance - click on the **"Performance"** mini-tab. This tab displays the Estimated Device Performance based on device configuration and user input device Supply and IC Temp .This tab also displays the Measured System Performance if you've connected a board and ran the LMP91050.

© 2011 Texas Instruments Incorporated

F. Capturing Data

1. Click on the **"Measurement"** tab.
2. Under the **"Output Format"** field, select Display as "**Output Voltage (V)"**
3. Under the **"Stop Condition"** field, select Run as **"1"** Seconds. Alternatively, select **"Run Continuously"** radio button to run continuously up to 1 hour.
4. Click on the **"Run"** button to view the output voltage results. A reading should be plotted as seen in Figure 8 . Output voltage will vary depending on input voltage across IN_DUT and CMOUT_DUT. If J2 is shorted, IN_DUT = CMOUT_DUT, output voltage should be about 1V. **Note: Board is provided with jumper J2 open. Use provided jumper to short IN to CMOUT for easy evaluation.**

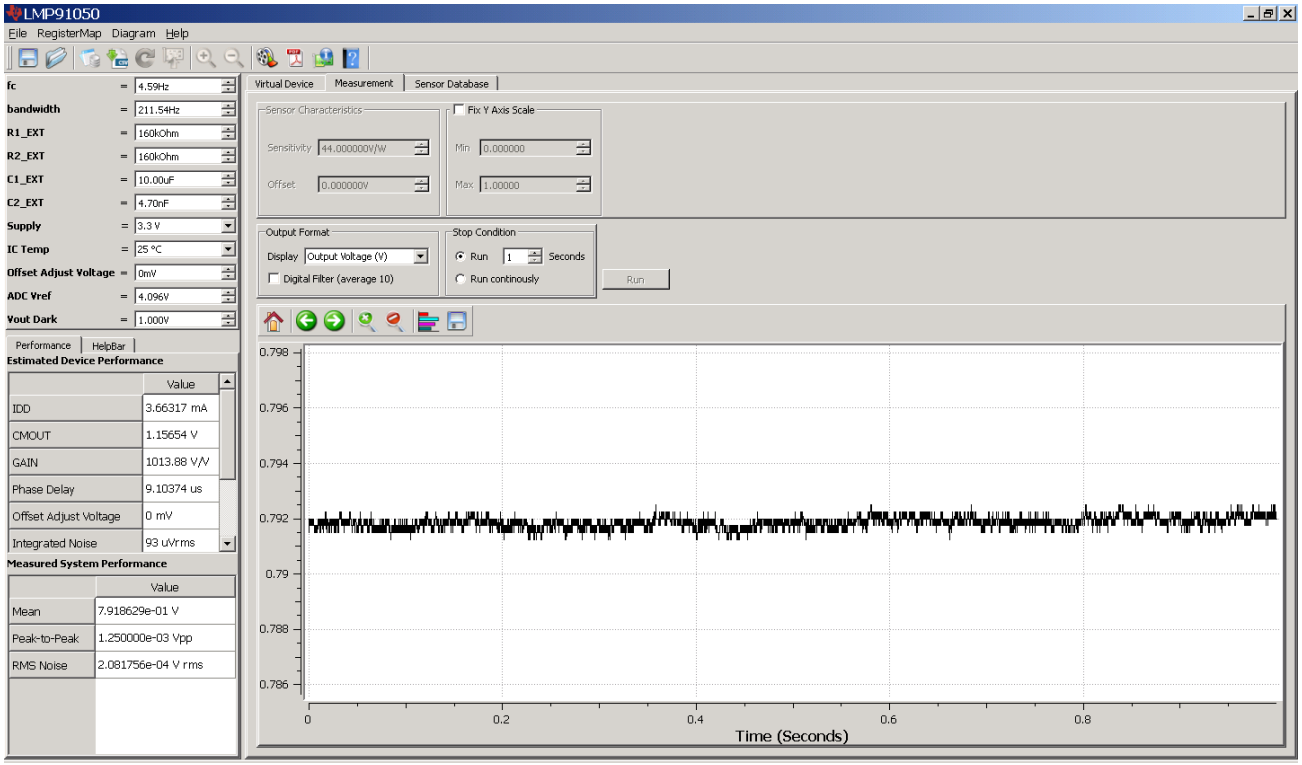

Figure 8 - Results for DC Reading

4.0. Powering the LMP91050SDEVAL

There are two ways in which VDD can be sourced: external supply or SPIO-4 power.

If using an external power supply to source VDD, do the following:
1. Connect an external power supply to banana jacks VDD-EXT and GND.
2. Jumper pins 2 and 3 of JP1 to connect the external power to VDD_DUT.

If using the SPIO-4 power to source VDD, then do the following:
1. Jumper pins 1 and 2 of JP1 to connect +3.3V SPIO-4 power to VDD_DUT.

The schematic for the LMP91050SDEVAL can be seen in Figure 10.

5.0. Evaluating the LMP91050 without the SPIO-4 Board.

The SPIO-4 digital controller board is used to generate the SPI signals to communicate to the LMP91050. Without the SPIO-4 board, the Sensor AFE software for the LMP91050 cannot be used to capture and analyze data from the LMP91050SDEVAL.

If the SPIO-4 board is not available but LMP91050 evaluation is desirable, then connect your own SPI signals to J1 of the LMP91050SDEVAL as seen below. Reference the LMP91050 datasheet for appropriate SPI timing diagrams. Source LMP91050 VDD with an external power supply per previous section.

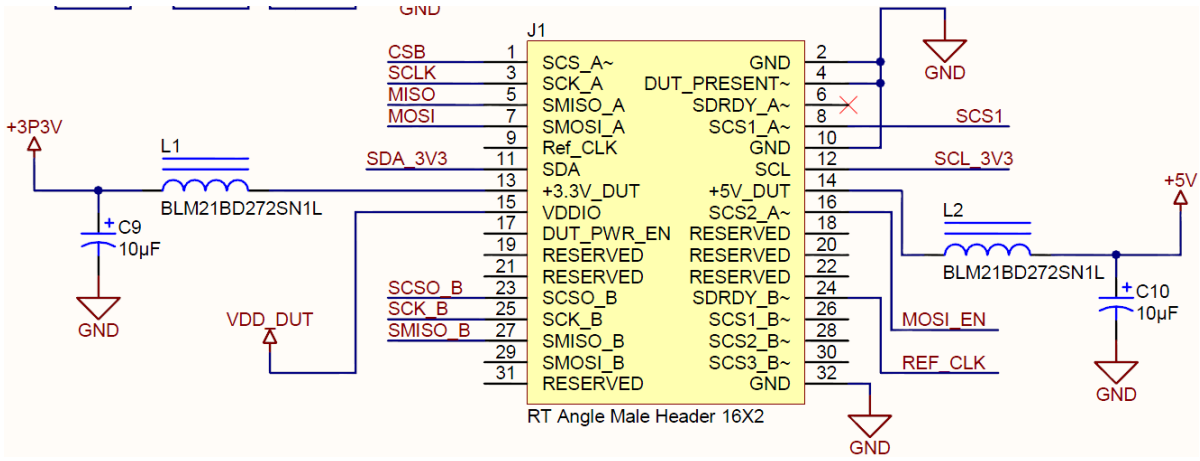

Figure 9 - LMP91050SDEVAL's J1 for SPI Signals

Refer to the LMP91050 datasheet for more information on the LMP91050's SPI protocol.

6.0. Installing the LMP91050 Sensor AFE Software

Each Sensor AFE product will have its own software. To access the Sensor AFE software for LMP91050, follow the steps below.

1. **Getting the Zip Files**
   - **a.** You can find the latest downloadable Sensor AFE software at ti.com/sensorafe
   - **b.** Download the zip file onto your local hard drive. Unzip this folder.

2. **Installing the Driver -** skip this step if you don't have the LMP91050SDEVAL and SPIO4 digital controller board.
   - **a.** See the provided **Installation Guide For SensorAFE Drivers.pdf**.

3. **Installing the Software**
   - **a.** See the provided **Installation Guide for LMP91050 SensorAFE Software.pdf**
     - **i.** Note: If you run the software without the boards, you'll get an error message. Ignore that error message and click "Ok" to continue.

7.0. Schematic

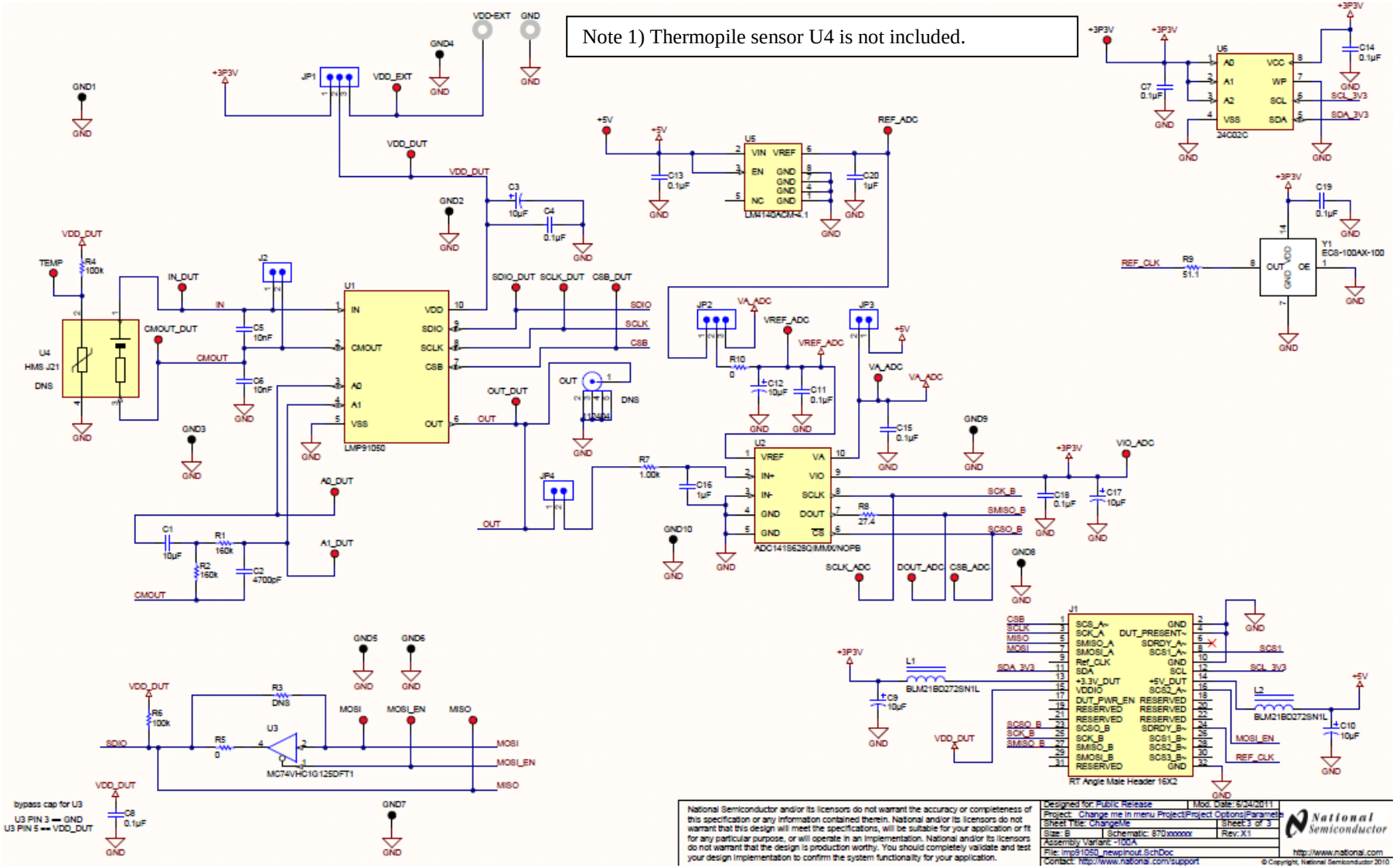

Figure 10 - LMP91050SDEVAL Schematic

8.0. Layout

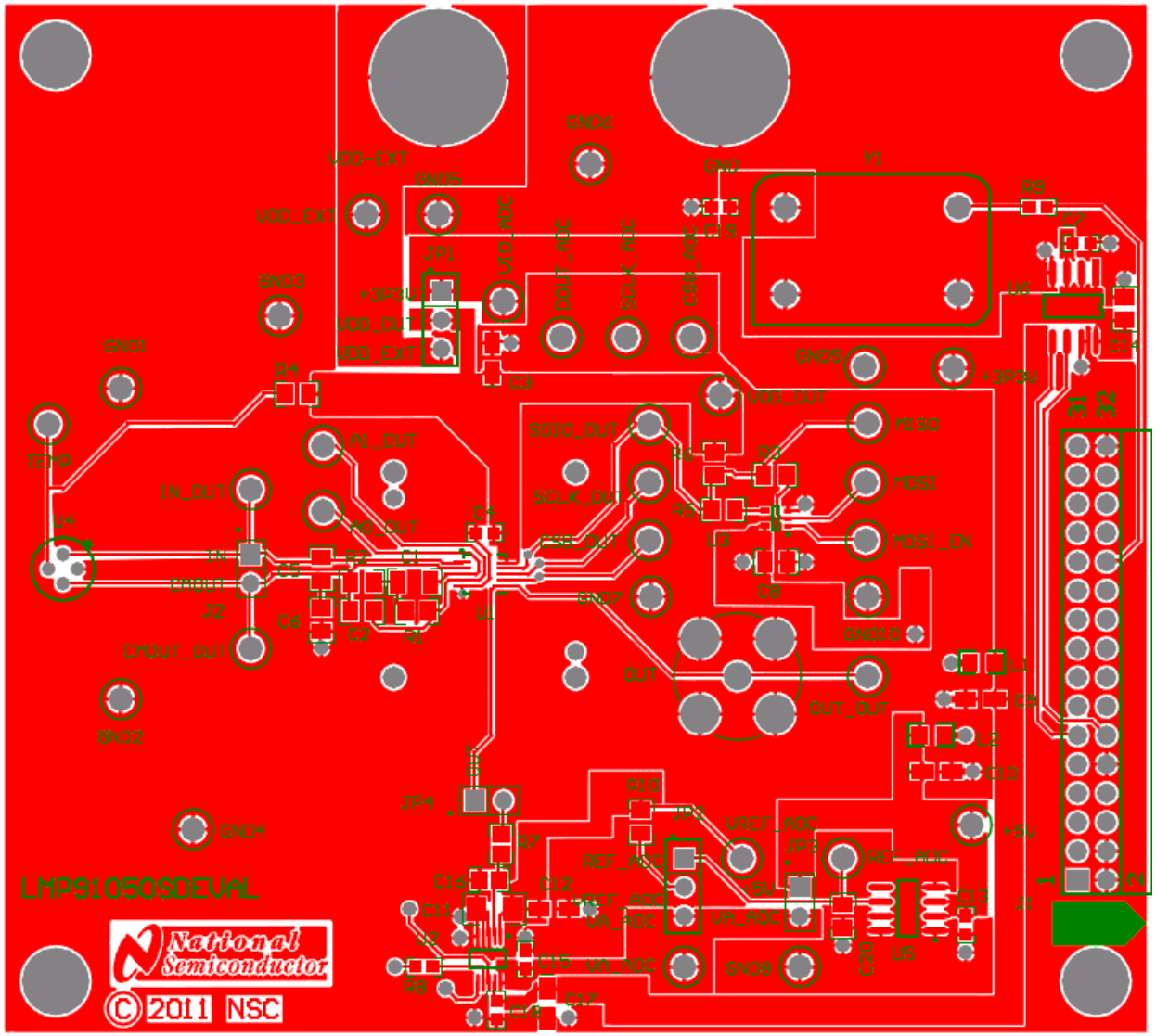

Figure 11 - Layout

9.0. BOM

Item	Designator	Description	Manufacturer	PartNumber	Quantity
1	+3P3V, +5V, A0_DUT, A1_DUT, CMOUT_DUT, CSB_ADC, CSB_DUT, DOUT_ADC, IN_DUT, MISO, MOSI, MOSI_EN, OUT_DUT, REF_ADC, SCLK_ADC, SCLK_DUT, SDI_DUT, TEMP, VA_ADC, VDD_DUT, VDD_EXT, VIO_ADC, VREF_ADC	Test Point, TH, Compact, Red	Keystone Electronics	5005	23
2	AA1	Printed Circuit Board	N/A	PCB	1
3	C1	CAP CER 10UF 16V X7R 10% 1206	TDK	C3216X7R1C106K	1
4	C2	CAP CER 4700PF 250V X7R 10% 0805	TDK	C2012X7R2E472K	1
5	C3, C9, C10, C12, C17	CAP, TANT, 10uF, 10V, +/-20%, 3.4 ohm, 3216-18 SMD	Vishay-Sprague	293D106X0010A2TE3	5
6	C4, C7, C13, C15, C18, C19	CAP, CERM, 0.1uF, 16V, +/-5%, X7R, 0603	AVX	0603YC104JAT2A	6
7	C5, C6	CAP, CERM, 10nF, 50V, +/-5%, C0G/NP0, 0805	MuRata	GRM2195C1H103JA01D	2
8	C8, C14	CAP, CERM, 0.1uF, 25V, +/-10%, X7R, 0805	AVX	08053C104KAT2A	2
9	C11	CAP, CERM, 0.1uF, 100V, +/-5%, X7R, 1206	AVX	12061C104JAT2A	1
10	C16, C20	CAP, CERM, 1uF, 10V, +/-10%, X7R, 0805	AVX	0805ZC105KAT2A	2
11	OUT	**DNS** (Connector, TH, BNC)	Amphenol Connex	112404	1
12	GND, VDD-EXT	Standard Banana Jack, Uninsulated, 15A	Johnson Components	108-0740-001	2
13	GND1, GND2, GND3, GND4, GND5, GND6, GND7, GND8, GND9, GND10	Test Point, TH, Compact, Black	Keystone Electronics	5006	10
14	N/A	BUMPON HEMISPHERE .44X.20 BLACK	3M	SJ-5003 (BLACK)	4
15	J1	SPIO-GPSI32 Header, 72-Pin, Dual row, Right Angle	Sullins Connector Solutions	PBC36DGAN	1
16	J2, JP3, JP4	Header, TH, 100mil, 2x1, Gold plated, 230 mil above insulator	Samtec Inc.	TSW-102-07-G-S	3
17	JP1, JP2	Header, TH, 100mil, 1x3, Gold plated, 230 mil above insulator	Samtec Inc.	TSW-103-07-G-S	2
18	L1, L2	Ferrite, Chip, 200mA, .80 ohm, SMD	Wurth Elektronik eiSos	BLM21BD272SN1L	2

© 2011 Texas Instruments Incorporated

19	R1, R2	RES, 160k ohm, 5%, 0.125W, 0805	Vishay-Dale	CRCW0805160KJNEA	2
20	R3	**DNS** (RES, 0 ohm, 5%, 0.125W, 0805)	Vishay-Dale	CRCW08050000Z0EA	0
21	R5, R10	RES, 0 ohm, 5%, 0.125W, 0805	Vishay-Dale	CRCW08050000Z0EA	2
22	R4	RES, 100k ohm, 5%, 0.125W, 0805	Vishay-Dale	CRCW0805100KJNEA	1
23	R6	RES, 100k ohm, 1%, 0.125W, 0805	Vishay-Dale	CRCW0805100KFKEA	1
24	R7	RES, 1.00k ohm, 1%, 0.125W, 0805	Vishay-Dale	CRCW08051K00FKEA	1
25	R8	RES, 27.4 ohm, 1%, 0.1W, 0603	Vishay-Dale	CRCW060327R4FKEA	1
26	R9	RES, 51.1 ohm, 1%, 0.1W, 0603	Vishay-Dale	CRCW060351R1FKEA	1
27	U1	**DNS** (Configurable AFE for NDIR)	Texas Instruments	LMP91050	1
28	U2	14-Bit, 200 kSPS, Pseudo-Differential Input, MicroPower ADC, 10-pin Mini SOIC, Pb-Free	Texas Instruments	ADC141S628QIMMX/NOPB	1
29	U3	Non-Inverting 3-State Buffer	On Semiconductor	MC74VHC1G125DFT1	1
30	U4	**DNS** (Thermopile Sensor)			0
31	U6	2K 5.0V I2C Serial EEPROM	Microchip	24C02C/SN	1
32	Y1	Osc 10.000Mhz 5.0V Full Size	ECS Inc	ECS-100AX-100	1
33	U5	Precision Micropower Low Dropout Voltage Reference, 8-pin Narrow SOIC	Texas Instruments	LM4140ACM-4.1/NOPB	1
34		Oscillator Socket	Aries Electronics	1107741	1

Table 2 - BOM

Evaluation Board/Kit Important Notice

Texas Instruments (TI) provides the enclosed product(s) under the following conditions:
This evaluation board/kit is intended for use for **ENGINEERING DEVELOPMENT, DEMONSTRATION, OR EVALUATION PURPOSES ONLY** and is not considered by TI to be a finished end-product fit for general consumer use. Persons handling the product(s) must have electronics training and observe good engineering practice standards. As such, the goods being provided are not intended to be complete in terms of required design-, marketing-, and/or manufacturing-related protective considerations, including product safety and environmental measures typically found in end products that incorporate such semiconductor components or circuit boards. This evaluation board/kit does not fall within the scope of the European Union directives regarding electromagnetic compatibility, restricted substances (RoHS), recycling (WEEE), FCC, CE or UL, and therefore may not meet the technical requirements of these directives or other related directives.
Should this evaluation board/kit not meet the specifications indicated in the User's Guide, the board/kit may be returned within 30 days from the date of delivery for a full refund. THE FOREGOING WARRANTY IS THE EXCLUSIVE WARRANTY MADE BY SELLER TO BUYER AND IS IN LIEU OF ALL OTHER WARRANTIES, EXPRESSED, IMPLIED, OR STATUTORY, INCLUDING ANY WARRANTY OF MERCHANTABILITY OR FITNESS FOR ANY PARTICULAR PURPOSE.
The user assumes all responsibility and liability for proper and safe handling of the goods. Further, the user indemnifies TI from all claims arising from the handling or use of the goods. Due to the open construction of the product, it is the user's responsibility to take any and all appropriate precautions with regard to electrostatic discharge.
EXCEPT TO THE EXTENT OF THE INDEMNITY SET FORTH ABOVE, NEITHER PARTY SHALL BE LIABLE TO THE OTHER FOR ANY INDIRECT, SPECIAL, INCIDENTAL, OR CONSEQUENTIAL DAMAGES.
TI currently deals with a variety of customers for products, and therefore our arrangement with the user **is not exclusive.**
TI assumes **no liability for applications assistance, customer product design, software performance, or infringement of patents or services described herein.**
Please read the User's Guide and, specifically, the Warnings and Restrictions notice in the User's Guide prior to handling the product. This notice contains important safety information about temperatures and voltages. For additional information on TI's environmental and/or safety programs, please contact the TI application engineer or visit www.ti.com/esh.
No license is granted under any patent right or other intellectual property right of TI covering or relating to any machine, process, or combination in which such TI products or services might be or are used.

FCC Warning

This evaluation board/kit is intended for use for **ENGINEERING DEVELOPMENT, DEMONSTRATION, OR EVALUATION PURPOSES ONLY** and is not considered by TI to be a finished end-product fit for general consumer use. It generates, uses, and can radiate radio frequency energy and has not been tested for compliance with the limits of computing devices pursuant to part 15 of FCC rules, which are designed to provide reasonable protection against radio frequency interference. Operation of this equipment in other environments may cause interference with radio communications, in which case the user at his own expense will be required to take whatever measures may be required to correct this interference.

EVM Warnings and Restrictions

It is important to operate this EVM within the input voltage range of 3.3V to 5V and the output voltage range of 0V to 5V.
Exceeding the specified input range may cause unexpected operation and/or irreversible damage to the EVM. If there are questions concerning the input range, please contact a TI field representative prior to connecting the input power.
Applying loads outside of the specified output range may result in unintended operation and/or possible permanent damage to the EVM. Please consult the EVM User's Guide prior to connecting any load to the EVM output. If there is uncertainty as to the load specification, please contact a TI field representative.
During normal operation, some circuit components may have case temperatures greater than +30° C. The EVM is designed to operate properly with certain components above +85° C as long as the input and output ranges are maintained. These components include but are not limited to linear regulators, switching transistors, pass transistors, and current sense resistors. These types of devices can be identified using the EVM schematic located in the EVM User's Guide. When placing measurement probes near these devices during operation, please be aware that these devices may be very warm to the touch.

Mailing Address: Texas Instruments, Post Office Box 655303, Dallas, Texas 75265
Copyright © 2011, Texas Instruments Incorporated

IMPORTANT NOTICE

Texas Instruments Incorporated and its subsidiaries (TI) reserve the right to make corrections, modifications, enhancements, improvements, and other changes to its products and services at any time and to discontinue any product or service without notice. Customers should obtain the latest relevant information before placing orders and should verify that such information is current and complete. All products are sold subject to TI's terms and conditions of sale supplied at the time of order acknowledgment.

TI warrants performance of its hardware products to the specifications applicable at the time of sale in accordance with TI's standard warranty. Testing and other quality control techniques are used to the extent TI deems necessary to support this warranty. Except where mandated by government requirements, testing of all parameters of each product is not necessarily performed.

TI assumes no liability for applications assistance or customer product design. Customers are responsible for their products and applications using TI components. To minimize the risks associated with customer products and applications, customers should provide adequate design and operating safeguards.

TI does not warrant or represent that any license, either express or implied, is granted under any TI patent right, copyright, mask work right, or other TI intellectual property right relating to any combination, machine, or process in which TI products or services are used. Information published by TI regarding third-party products or services does not constitute a license from TI to use such products or services or a warranty or endorsement thereof. Use of such information may require a license from a third party under the patents or other intellectual property of the third party, or a license from TI under the patents or other intellectual property of TI.

Reproduction of TI information in TI data books or data sheets is permissible only if reproduction is without alteration and is accompanied by all associated warranties, conditions, limitations, and notices. Reproduction of this information with alteration is an unfair and deceptive business practice. TI is not responsible or liable for such altered documentation. Information of third parties may be subject to additional restrictions.

Resale of TI products or services with statements different from or beyond the parameters stated by TI for that product or service voids all express and any implied warranties for the associated TI product or service and is an unfair and deceptive business practice. TI is not responsible or liable for any such statements.

TI products are not authorized for use in safety-critical applications (such as life support) where a failure of the TI product would reasonably be expected to cause severe personal injury or death, unless officers of the parties have executed an agreement specifically governing such use. Buyers represent that they have all necessary expertise in the safety and regulatory ramifications of their applications, and acknowledge and agree that they are solely responsible for all legal, regulatory and safety-related requirements concerning their products and any use of TI products in such safety-critical applications, notwithstanding any applications-related information or support that may be provided by TI. Further, Buyers must fully indemnify TI and its representatives against any damages arising out of the use of TI products in such safety-critical applications.

TI products are neither designed nor intended for use in military/aerospace applications or environments unless the TI products are specifically designated by TI as military-grade or "enhanced plastic." Only products designated by TI as military-grade meet military specifications. Buyers acknowledge and agree that any such use of TI products which TI has not designated as military-grade is solely at the Buyer's risk, and that they are solely responsible for compliance with all legal and regulatory requirements in connection with such use.

TI products are neither designed nor intended for use in automotive applications or environments unless the specific TI products are designated by TI as compliant with ISO/TS 16949 requirements. Buyers acknowledge and agree that, if they use any non-designated products in automotive applications, TI will not be responsible for any failure to meet such requirements.

Following are URLs where you can obtain information on other Texas Instruments products and application solutions:

Products		**Applications**	
Audio	www.ti.com/audio	Automotive and Transportation	www.ti.com/automotive
Amplifiers	amplifier.ti.com	Communications and Telecom	www.ti.com/communications
Data Converters	dataconverter.ti.com	Computers and Peripherals	www.ti.com/computers
DLP® Products	www.dlp.com	Consumer Electronics	www.ti.com/consumer-apps
DSP	dsp.ti.com	Energy and Lighting	www.ti.com/energy
Clocks and Timers	www.ti.com/clocks	Industrial	www.ti.com/industrial
Interface	interface.ti.com	Medical	www.ti.com/medical
Logic	logic.ti.com	Security	www.ti.com/security
Power Mgmt	power.ti.com	Space, Avionics and Defense	www.ti.com/space-avionics-defense
Microcontrollers	microcontroller.ti.com	Video and Imaging	www.ti.com/video
RFID	www.ti-rfid.com		
OMAP Mobile Processors	www.ti.com/omap		
Wireless Connectivity	www.ti.com/wirelessconnectivity		
	TI E2E Community Home Page		e2e.ti.com

Mailing Address: Texas Instruments, Post Office Box 655303, Dallas, Texas 75265
Copyright © 2012, Texas Instruments Incorporated