AN-2223 LMP8278Q VSSOP Evaluation Board

1 Introduction

The LMP8278Q VSSOP Evaluation Board, Figure 1, is designed to evaluate the LMP8278Q current sense amplifier. The LMP8278Q is a 40V Common Mode, Unidirectional Precision Current Sensing amplifier with a gain of 14x. This board has an LMP8278Q part mounted on the PCB together with a de-coupling capacitor, power supply connections, and input and output connectors.

2 General Description

The LMP8278Q is a fixed 14x gain precision current sense amplifier. The part amplifies and filters small differential signals in the presence of high common mode voltages. The part operates from a single 5V supply voltage. With an input common mode voltage range from –2V to +28V the gain is very precise (±0.5%). The part can handle common mode voltages in the range –2V to +40V with relaxed specifications. The LMP8278Q is a member of the Linear Monolithic Precision (LMP™) family and is ideal for unidirectional current sensing applications.

The part has a precise gain of 14x, which is adequate in most targeted applications to drive an ADC to its full scale value. The fixed gain is achieved in two separate stages, a preamplifier with a gain of 7x and an output stage buffer amplifier with a gain of 2x. The connection between the two stages of the signal path is brought out on two pins to enable the possibility to create an additional filter network around the output buffer amplifier. These pins can also be used for alternative configurations with different gain as described in the applications section of the datasheet.

The LMP8278Q incorporates enhanced manufacturing and support processes for the automotive market, including defect detection methodologies. Reliability qualification is compliant with the requirements and temperature grades defined in the AEC Q100 standard.

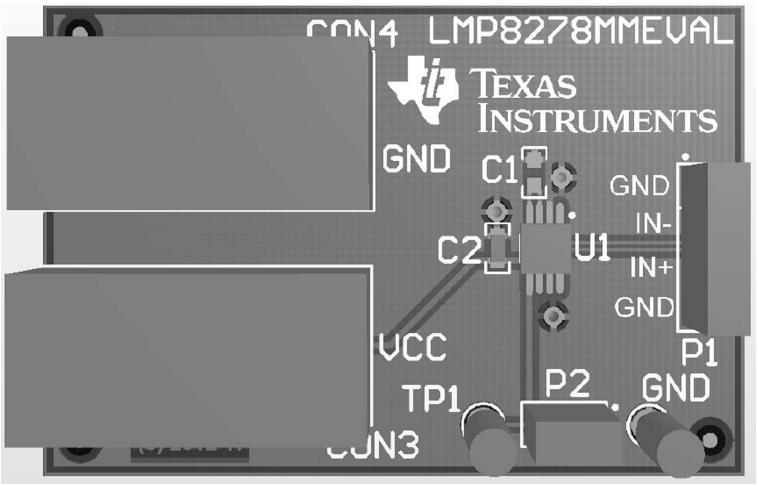

Figure 1. LMP8278Q Evaluation Board

LMP is a trademark of Texas Instruments.
All other trademarks are the property of their respective owners.

Copyright © 2012–2013, Texas Instruments Incorporated

3 LMP8278Q Operating Conditions

- Temperature Range −40°C to 125°C
- Power Supply Voltage 4.5V ≤ V_S ≤ 5.5V
- CMVR for ±1.0% gain accuracy −2V to +40V
- CMVR for ±0.5% gain accuracy −2V to 28V

4 Description of the LMP8278Q Evaluation Board

The LMP8278Q evaluation board requires a power supply with a voltage between 4.5V and 5.5V. The supply current will be <1 mA in normal operation with high impedance load on the output of the part. The positive supply voltage is connected to VCC (CON3) The negative supply voltage is connected to GND (CON4).

The input signal is connected between –IN and +IN (pins 2 and 3 of P1) and the output signal is available at OUT (pin 2 of P2).

There is the option to place a capacitor C1 on the board to create a low pass filter between the first and second stage of the amplifier. This can be used to reduce the output noise and glitches that might appear from switching large common mode voltages with very fast transients at the input (for more details about this filter, see the application information section of *LMP8278Q High Common Mode, 14 x Gain, Precision Current Sensing Amplifier* (SNAS575)).

Additional test points, TP1 and GND, are provided at the output of the LMP8278Q for convenience of use.

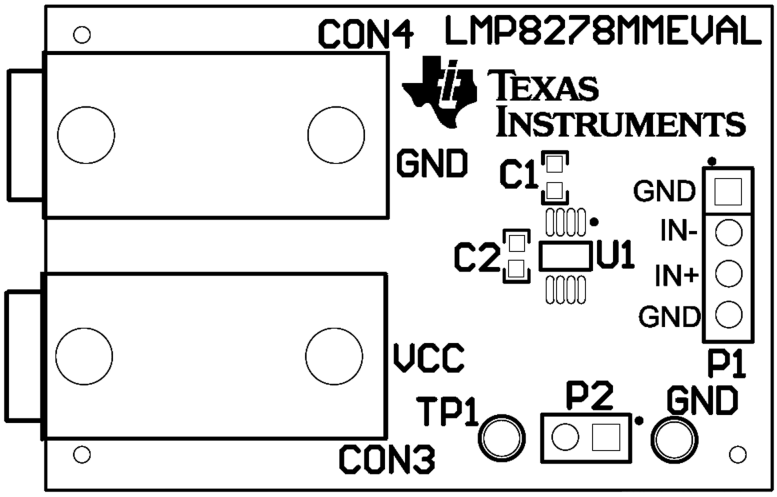

Figure 2. Power Supply Connectors and Headers

5 PCB Layout Guidelines

This section provides general practical guidelines for PCB layouts that use various power and ground traces. Designers should note that these are only "rule-of-thumb" recommendations and the actual results are predicated on the final layout.

5.1 Differential Signals

The two input pins of the LMP8278Q form a differential pair that must be handled following the rules given below:

- Keep both signals coupled by routing them closely together and keeping them of equal length.
- Do not allow any other signal in between these two signals of the differential pair.
- Keep all impedances in both traces of the signal equal.

Copyright © 2012–2013, Texas Instruments Incorporated

5.2 Power, Ground, and De-coupling

Keep the power supply de-coupling capacitor close to the power supply pin (V_S of the part.)

Make sure all return currents of the signals can flow next to the originating signals.

6 Description of Headers and Connectors of the LMP8278Q Evaluation Board

The LMP8278Q Evaluation Board provides the following headers and connectors for connecting test equipment and supplying the LMP8278Q part.

7 Connector and Header Functions

Designator	Function or Use	Comment
P1	GND	Pin1
	Input	Pin2 = Negative Input
		Pin3 = Positive Input
	GND	Pin4
P2	Output	Pin1 = GND Pin2 = Ouput
CON3	Supply VCC	
CON4	Ground connection (GND)	
TP1	Output test point	
GND	GND test point	

Copyright © 2012–2013, Texas Instruments Incorporated

8 Schematic with LMP8278QMM Mounted

Figure 3 shows the LMP8278Q evaluation board with an LMP8278QMM mounted on the PCB.

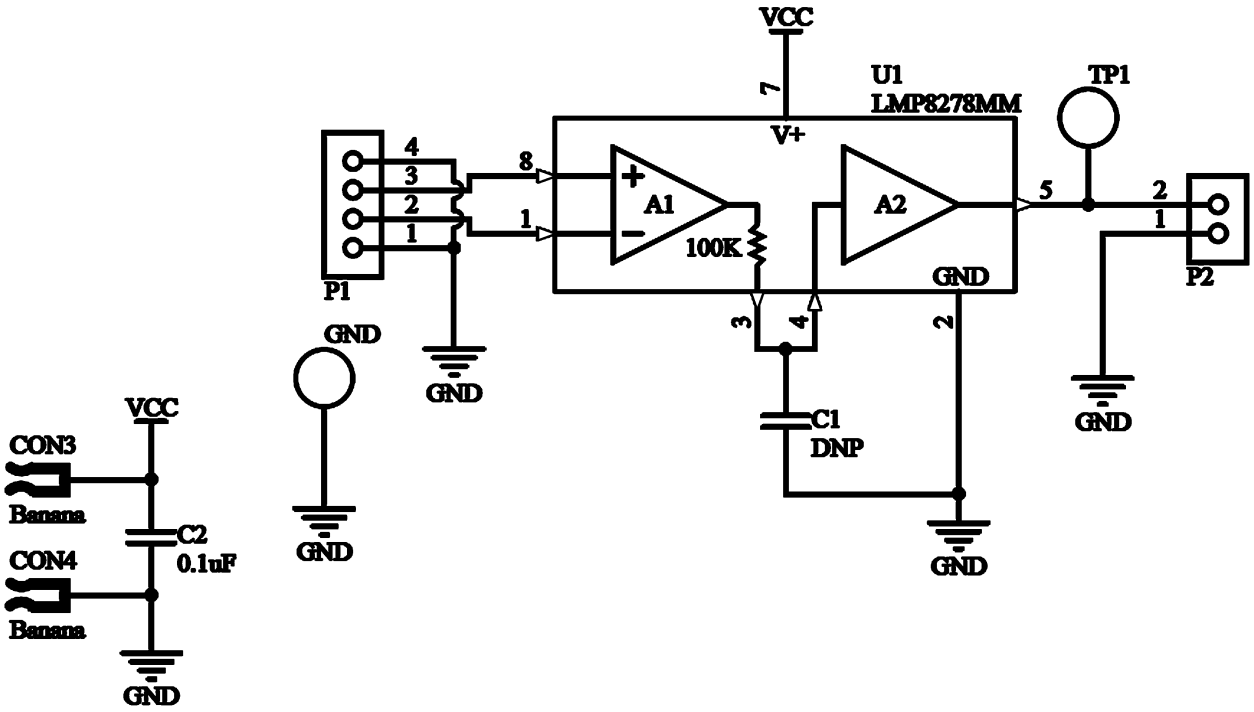

Figure 3. Schematic Diagram

9 Bill of Materials

Designator	Component	Value	Tolerance	Comment	Package Type
C1	Capacitor	N/A			0603
C2	Capacitor	100 nF			0603
P1	Header 4 pin			Input	
P2	Header 2 pin			Output	
CON3	Banana plug	RED		VCC	Banana_COLOR
CON4	Banana plug	BLACK		GND	Banana_COLOR
U1	LMP8278	LMP8278			VSSOP
TP1	Test point	RED		VCC	
GND	Test point	BLACK		GND	

Copyright © 2012–2013, Texas Instruments Incorporated

10 Layout

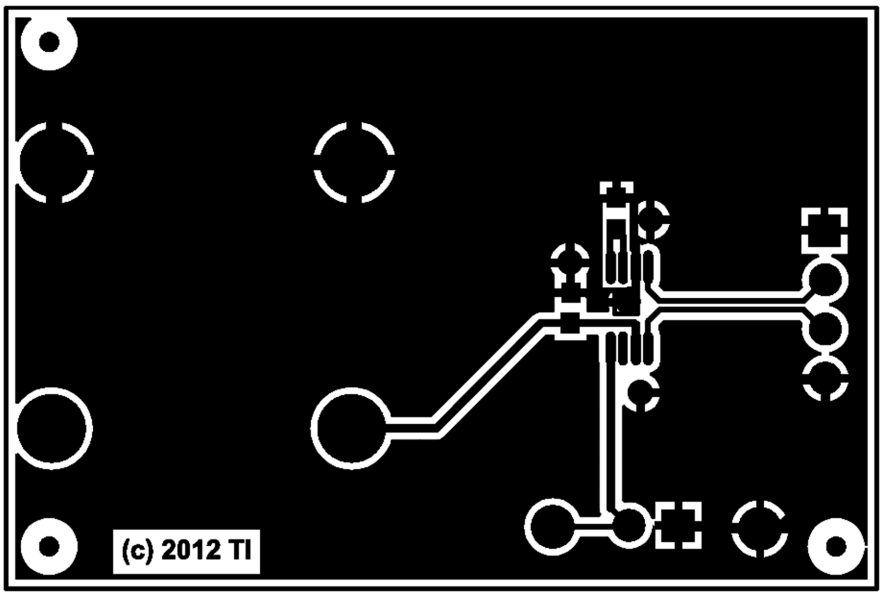

Figure 4. Layout, Top Layer

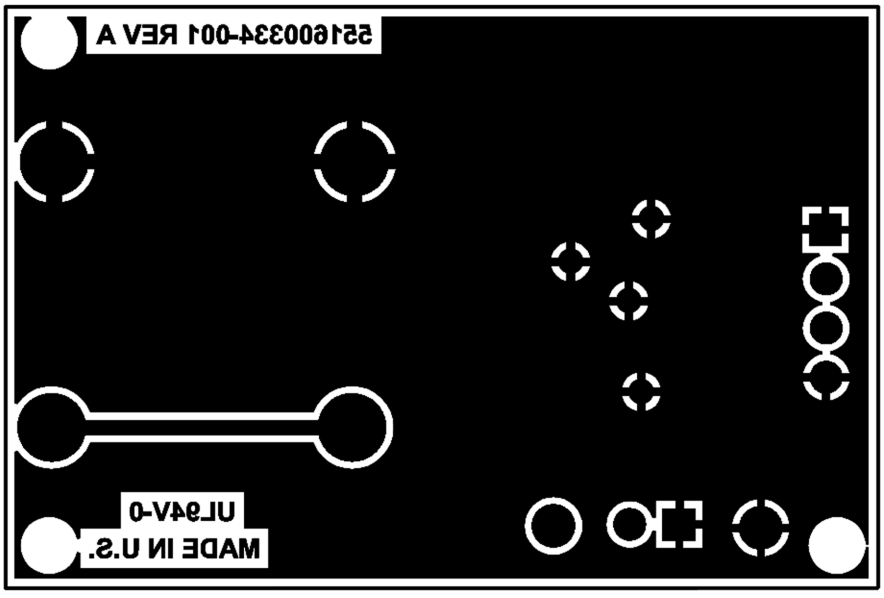

Figure 5. Layout, Bottom layer

Copyright © 2012–2013, Texas Instruments Incorporated

IMPORTANT NOTICE

Texas Instruments Incorporated and its subsidiaries (TI) reserve the right to make corrections, enhancements, improvements and other changes to its semiconductor products and services per JESD46, latest issue, and to discontinue any product or service per JESD48, latest issue. Buyers should obtain the latest relevant information before placing orders and should verify that such information is current and complete. All semiconductor products (also referred to herein as “components”) are sold subject to TI’s terms and conditions of sale supplied at the time of order acknowledgment.

TI warrants performance of its components to the specifications applicable at the time of sale, in accordance with the warranty in TI’s terms and conditions of sale of semiconductor products. Testing and other quality control techniques are used to the extent TI deems necessary to support this warranty. Except where mandated by applicable law, testing of all parameters of each component is not necessarily performed.

TI assumes no liability for applications assistance or the design of Buyers’ products. Buyers are responsible for their products and applications using TI components. To minimize the risks associated with Buyers’ products and applications, Buyers should provide adequate design and operating safeguards.

TI does not warrant or represent that any license, either express or implied, is granted under any patent right, copyright, mask work right, or other intellectual property right relating to any combination, machine, or process in which TI components or services are used. Information published by TI regarding third-party products or services does not constitute a license to use such products or services or a warranty or endorsement thereof. Use of such information may require a license from a third party under the patents or other intellectual property of the third party, or a license from TI under the patents or other intellectual property of TI.

Reproduction of significant portions of TI information in TI data books or data sheets is permissible only if reproduction is without alteration and is accompanied by all associated warranties, conditions, limitations, and notices. TI is not responsible or liable for such altered documentation. Information of third parties may be subject to additional restrictions.

Resale of TI components or services with statements different from or beyond the parameters stated by TI for that component or service voids all express and any implied warranties for the associated TI component or service and is an unfair and deceptive business practice. TI is not responsible or liable for any such statements.

Buyer acknowledges and agrees that it is solely responsible for compliance with all legal, regulatory and safety-related requirements concerning its products, and any use of TI components in its applications, notwithstanding any applications-related information or support that may be provided by TI. Buyer represents and agrees that it has all the necessary expertise to create and implement safeguards which anticipate dangerous consequences of failures, monitor failures and their consequences, lessen the likelihood of failures that might cause harm and take appropriate remedial actions. Buyer will fully indemnify TI and its representatives against any damages arising out of the use of any TI components in safety-critical applications.

In some cases, TI components may be promoted specifically to facilitate safety-related applications. With such components, TI’s goal is to help enable customers to design and create their own end-product solutions that meet applicable functional safety standards and requirements. Nonetheless, such components are subject to these terms.

No TI components are authorized for use in FDA Class III (or similar life-critical medical equipment) unless authorized officers of the parties have executed a special agreement specifically governing such use.

Only those TI components which TI has specifically designated as military grade or “enhanced plastic” are designed and intended for use in military/aerospace applications or environments. Buyer acknowledges and agrees that any military or aerospace use of TI components which have ***not*** been so designated is solely at the Buyer's risk, and that Buyer is solely responsible for compliance with all legal and regulatory requirements in connection with such use.

TI has specifically designated certain components as meeting ISO/TS16949 requirements, mainly for automotive use. In any case of use of non-designated products, TI will not be responsible for any failure to meet ISO/TS16949.

Products		**Applications**	
Audio	www.ti.com/audio	Automotive and Transportation	www.ti.com/automotive
Amplifiers	amplifier.ti.com	Communications and Telecom	www.ti.com/communications
Data Converters	dataconverter.ti.com	Computers and Peripherals	www.ti.com/computers
DLP® Products	www.dlp.com	Consumer Electronics	www.ti.com/consumer-apps
DSP	dsp.ti.com	Energy and Lighting	www.ti.com/energy
Clocks and Timers	www.ti.com/clocks	Industrial	www.ti.com/industrial
Interface	interface.ti.com	Medical	www.ti.com/medical
Logic	logic.ti.com	Security	www.ti.com/security
Power Mgmt	power.ti.com	Space, Avionics and Defense	www.ti.com/space-avionics-defense
Microcontrollers	microcontroller.ti.com	Video and Imaging	www.ti.com/video
RFID	www.ti-rfid.com		
OMAP Applications Processors	www.ti.com/omap	**TI E2E Community**	e2e.ti.com
Wireless Connectivity	www.ti.com/wirelessconnectivity		

Mailing Address: Texas Instruments, Post Office Box 655303, Dallas, Texas 75265
Copyright © 2013, Texas Instruments Incorporated