LMK00306 3-GHz 6-Output Ultra-Low Additive Jitter Differential Clock Buffer/Level Translator

1 Features

- 3:1 Input Multiplexer
  - Two Universal Inputs Operate up to 3.1 GHz and Accept LVPECL, LVDS, CML, SSTL, HSTL, HCSL, or Single-Ended Clocks
  - One Crystal Input Accepts a 10 to 40 MHz Crystal or Single-Ended Clock
- Two Banks with 3 Differential Outputs Each
  - LVPECL, LVDS, HCSL, or Hi-Z (Selectable Per Bank)
  - LVPECL Additive Jitter with LMK03806 Clock Source at 156.25 MHz:
    - 20 fs RMS (10 kHz to 1 MHz)
    - 51 fs RMS (12 kHz to 20 MHz)
- High PSRR: -65 / -76 dBc (LVPECL/LVDS) at 156.25 MHz
- LVCMOS Output with Synchronous Enable Input
- Pin-Controlled Configuration
- V_{CC} Core Supply: 3.3 V ± 5%
- 3 Independent V_{CCO} Output Supplies: 3.3 V/2.5 V ± 5%
- Industrial Temperature Range: -40°C to +85°C
- 36-lead WQFN (6 mm × 6 mm)

2 Applications

- Clock Distribution and Level Translation for ADCs, DACs, Multi-Gigabit Ethernet, XAUI, Fibre Channel, SATA/SAS, SONET/SDH, CPRI, High-Frequency Backplanes
- Switches, Routers, Line Cards, Timing Cards
- Servers, Computing, PCI Express (PCIe 3.0)
- Remote Radio Units and Baseband Units

3 Description

The LMK00306 is a 3-GHz, 6-output differential fanout buffer intended for high-frequency, low-jitter clock/data distribution and level translation. The input clock can be selected from two universal inputs or one crystal input. The selected input clock is distributed to two banks of 3 differential outputs and one LVCMOS output. Both differential output banks can be independently configured as LVPECL, LVDS, or HCSL drivers, or disabled. The LVCMOS output has a synchronous enable input for runt-pulse-free operation when enabled or disabled. The LMK00306 operates from a 3.3 V core supply and 3 independent 3.3 V/2.5 V output supplies.

The LMK00306 provides high performance, versatility, and power efficiency, making it ideal for replacing fixed-output buffer devices while increasing timing margin in the system.

Device Information(1)

PART NUMBER	PACKAGE	BODY SIZE (NOM)
LMK00306	WQFN (36)	6.00 mm × 6.00 mm

(1) For all available packages, see the orderable addendum at the end of the data sheet.

Functional Block Diagram

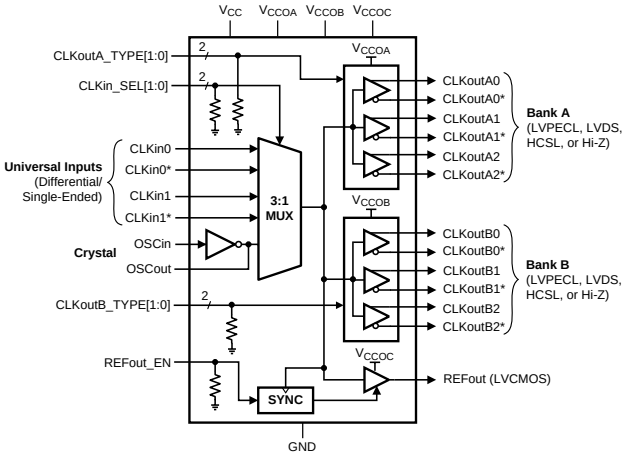

LVPECL Output Swing (V_{OD}) vs. Frequency

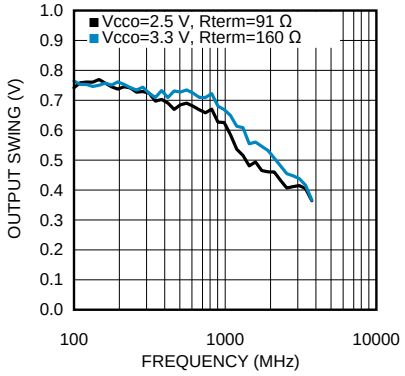

An IMPORTANT NOTICE at the end of this data sheet addresses availability, warranty, changes, use in safety-critical applications, intellectual property matters and other important disclaimers. PRODUCTION DATA.

Table of Contents

1 Features ... 1
2 Applications ... 1
3 Description ... 1
4 Revision History ... 2
5 Pin Configuration and Functions ... 4
6 Specifications ... 6
6.1 Absolute Maximum Ratings ... 6
6.2 ESD Ratings ... 6
6.3 Recommended Operating Conditions ... 6
6.4 Thermal Information ... 6
6.5 Electrical Characteristics ... 7
6.6 Typical Characteristics ... 14
7 Parameter Measurement Information ... 18
7.1 Differential Voltage Measurement Terminology ... 18
8 Detailed Description ... 19
8.1 Overview ... 19
8.2 Functional Block Diagram ... 19
8.3 Feature Description ... 20
9 Application and Implementation ... 22
9.1 Driving the Clock Inputs ... 22
9.2 Crystal Interface ... 23
9.3 Termination and Use of Clock Drivers ... 24
10 Power Supply Recommendations ... 29
10.1 Power Supply Sequencing ... 29
10.2 Current Consumption and Power Dissipation Calculations ... 29
10.3 Power Supply Bypassing ... 30
10.4 Thermal Management ... 31
11 Device and Documentation Support ... 33
11.1 Documentation Support ... 33
11.2 Community Resources ... 33
11.3 Trademarks ... 33
11.4 Electrostatic Discharge Caution ... 33
11.5 Glossary ... 33
12 Mechanical, Packaging, and Orderable Information ... 33

4 Revision History

NOTE: Page numbers for previous revisions may differ from page numbers in the current version.

Changes from Revision C (May 2013) to Revision D — **Page**

- Added "Ultra-Low Additive Jitter" to document title ... 1
- Added, updated, or renamed the following sections: *Specifications*; *Detailed Description*; *Application and Implementation*; *Power Supply Recommendations*; *Device and Documentation Support*; *Mechanical, Packaging, and Ordering Information* ... 1
- Changed Cin (typ) from 1 pF to 4 pF (based on updated test method) in *Electrical Characteristics: Crystal Interface* ... 8
- Added footnote for V_{I_SE} parameter in the *Electrical Characteristics* table. ... 8
- Added “Additive RMS Jitter, Integration Bandwidth 10 kHz to 20 MHz” parameter with 100 MHz and 156.25 MHz Test conditions, Typical values, Max values, and footnotes in Electrical Characteristics: LVPECL Outputs ... 9
- Added “Additive RMS Jitter, Integration Bandwidth 10 kHz to 20 MHz” parameter with 100 MHz and 156.25 MHz Test conditions, Typical values, Max values, and footnotes in Electrical Characteristics: LVDS Outputs ... 10
- Added new paragraph at end of *Driving the Clock Inputs* ... 22
- Changed "LMK00301" to LMK00306" in Figure 27 and Figure 28 ... 23
- Changed Cin = 4 pF (typ, based on updated test method) in *Crystal Interface* ... 23
- Added Power Supply Sequencing ... 29

Changes from Revision B (February 2013) to Revision C — **Page**

- Changed *Target Applications* by adding additional applications to the second and third bullets, and removing High-Speed and Serial Interfaces from first bullet. ... 1
- Changed V_{CM}text to condition for VIH to VCM parameter group. ... 8
- Deleted V_{IH} min value from Electrical Characteristics table. ... 8
- Deleted V_{IL} max value from Electrical Characteristics table. ... 8
- Added V_{I_SE} parameter and spec limits with corresponding table note to Electrical Characteristics Table. ... 8
- Changed third paragraph in Driving the Clock Inputs section to include CLKin* and LVCMOS text. Revised to better correspond with information in Electrical Characteristics Table. ... 22
- Changed bypass cap text to signal attenuation text of the fourth paragraph in *Driving the Clock Inputs* section. ... 22

Copyright © 2012–2016, Texas Instruments Incorporated

- Changed *Single-Ended LVCMOS Input, DC Coupling with Common Mode Biasing* image with revised graphic..... 23
- Added text to second paragraph of *Termination for AC Coupled Differential Operation* to explain graphic update to *Differential LVDS Operation with AC Coupling to Receivers*. 26
- Changed graphic for *Differential LVDS Operation, AC Coupling, No Biasing by the Receiver* and updated caption. 26

Copyright © 2012–2016, Texas Instruments Incorporated

5 Pin Configuration and Functions

36-Pin WQFN
Package NJK0036A
Top View

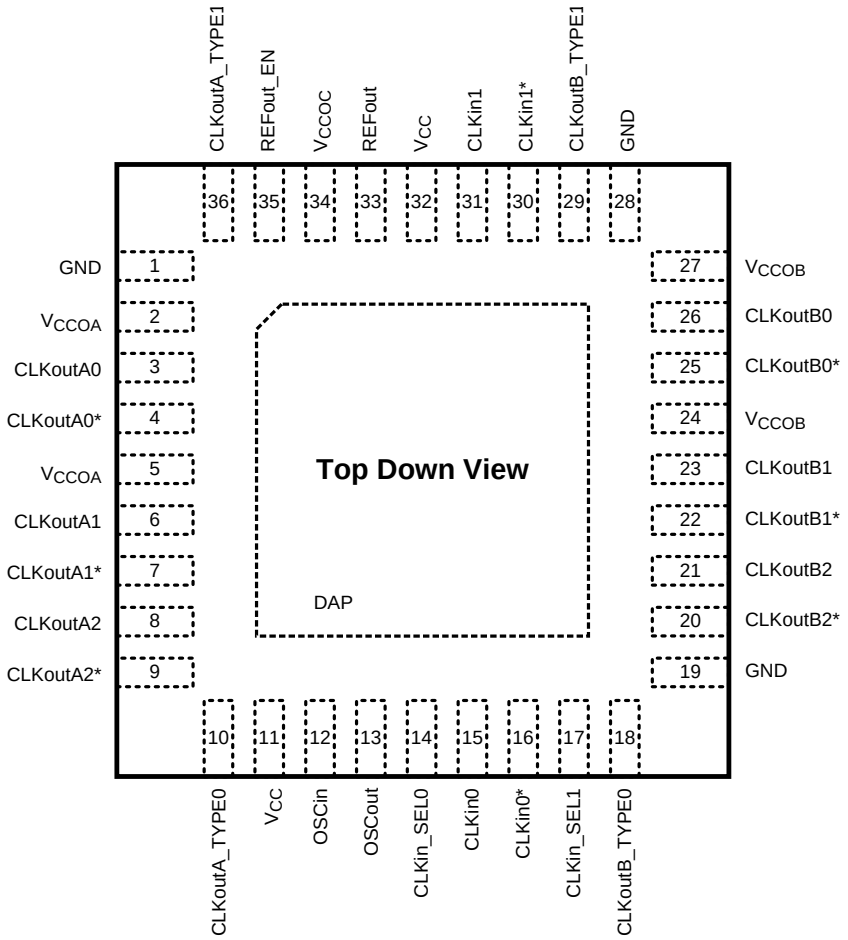

Copyright © 2012–2016, Texas Instruments Incorporated

Pin Functions[1]

PIN		TYPE	DESCRIPTION
NO.	NAME		
DAP	DAP	GND	Die Attach Pad. Connect to the PCB ground plane for heat dissipation.
1, 19, 28	GND	GND	Ground
2, 5	V_{CCOA}	PWR	Power supply for Bank A Output buffers. V_{CCOA} can operate from 3.3 V or 2.5 V. The V_{CCOA} pins are internally tied together. Bypass with a 0.1 uF low-ESR capacitor placed very close to each Vcco pin. [2]
3, 4	CLKoutA0, CLKoutA0*	O	Differential clock output A0. Output type set by CLKoutA_TYPE pins.
6, 7	CLKoutA1, CLKoutA1*	O	Differential clock output A1. Output type set by CLKoutA_TYPE pins.
8, 9	CLKoutA2, CLKoutA2*	O	Differential clock output A2. Output type set by CLKoutA_TYPE pins.
10, 36	CLKoutA_TYPE0, CLKoutA_TYPE1	I	Bank A output buffer type selection pins [3]
11, 32	Vcc	PWR	Power supply for Core and Input buffer blocks. The Vcc supply operates from 3.3 V. Bypass with a 0.1 uF low-ESR capacitor placed very close to each Vcc pin.
12	OSCin	I	Input for crystal. Can also be driven by a XO, TCXO, or other external single-ended clock.
13	OSCout	O	Output for crystal. Leave OSCout floating if OSCin is driven by a single-ended clock.
14, 17	CLKin_SEL0, CLKin_SEL1	I	Clock input selection pins [3]
15, 16	CLKin0, CLKin0*	I	Universal clock input 0 (differential/single-ended)
18, 29	CLKoutB_TYPE0, CLKoutB_TYPE1	I	Bank B output buffer type selection pins [3]
20, 21	CLKoutB2*, CLKoutB2	O	Differential clock output B2. Output type set by CLKoutB_TYPE pins.
22, 23	CLKoutB1*, CLKoutB1	O	Differential clock output B1. Output type set by CLKoutB_TYPE pins.
24, 27	V_{CCOB}	PWR	Power supply for Bank B Output buffers. V_{CCOB} can operate from 3.3 V or 2.5 V. The V_{CCOB} pins are internally tied together. Bypass with a 0.1 uF low-ESR capacitor placed very close to each Vcco pin. [2]
25, 26	CLKoutB0*, CLKoutB0	O	Differential clock output B0. Output type set by CLKoutB_TYPE pins.
30, 31	CLKin1*, CLKin1	I	Universal clock input 1 (differential/single-ended)
33	REFout	O	LVCMOS reference output. Enable output by pulling REFout_EN pin high.
34	V_{CCOC}	PWR	Power supply for REFout Output buffer. V_{CCOC} can operate from 3.3 V or 2.5 V. Bypass with a 0.1 uF low-ESR capacitor placed very close to each Vcco pin. [2]
35	REFout_EN	I	REFout enable input. Enable signal is internally synchronized to selected clock input. [3]

(1) Any unused output pins should be left floating with minimum copper length (see note in *Clock Outputs*), or properly terminated if connected to a transmission line, or disabled/Hi-Z if possible. See *Clock Outputs* for output configuration or *Termination and Use of Clock Drivers* for output interface and termination techniques.
(2) The output supply voltages or pins (V_{CCOA}, V_{CCOB}, and V_{CCOC}) will be called V_{CCO} in general when no distinction is needed, or when the output supply can be inferred from the output bank/type.
(3) CMOS control input with internal pull-down resistor.

Copyright © 2012–2016, Texas Instruments Incorporated

6 Specifications

6.1 Absolute Maximum Ratings

over operating free-air temperature range (unless otherwise noted) (1)(2)

		MIN	MAX	UNIT
V_{CC}, V_{CCO}	Supply Voltages	-0.3	3.6	V
V_{IN}	Input Voltage	-0.3	(V_{CC} + 0.3)	V
T_{STG}	Storage Temperature	-65	+150	°C
T_L	Lead Temperature (solder 4 s)		+260	°C
T_J	Junction Temperature		+150	°C

(1) Stresses beyond those listed under *Absolute Maximum Ratings* may cause permanent damage to the device. These are stress ratings only, which do not imply functional operation of the device at these or any other conditions beyond those indicated under *Recommended Operating Conditions*. Exposure to absolute-maximum-rated conditions for extended periods may affect device reliability.
(2) If Military/Aerospace specified devices are required, please contact the Texas Instruments Sales Office/Distributors for availability and specifications.

6.2 ESD Ratings

		VALUE	UNIT
$V_{(ESD)}$ Electrostatic discharge	Human-body model (HBM), per ANSI/ESDA/JEDEC JS-001 (1)	±2000	V
	Machine model (MM)	±150	
	Charged-device model (CDM), per JEDEC specification JESD22-C101 (2)	±750	

(1) JEDEC document JEP155 states that 500-V HBM allows safe manufacturing with a standard ESD control process. Manufacturing with less than 500-V HBM is possible with the necessary precautions. Pins listed as ±2000 V may actually have higher performance.
(2) JEDEC document JEP157 states that 250-V CDM allows safe manufacturing with a standard ESD control process. Manufacturing with less than 250-V CDM is possible with the necessary precautions. Pins listed as ±750 V may actually have higher performance.

6.3 Recommended Operating Conditions

PARAMETER		MIN	TYP	MAX	UNIT
T_A	Ambient Temperature Range	-40	25	85	°C
T_J	Junction Temperature			125	°C
V_{CC}	Core Supply Voltage Range	3.15	3.3	3.45	V
V_{CCO}	Output Supply Voltage Range (1)(2)	3.3 – 5% 2.5 – 5%	3.3 2.5	3.3 + 5% 2.5 + 5%	V

(1) The output supply voltages or pins (V_{CCOA}, V_{CCOB}, and V_{CCOC}) will be called V_{CCO} in general when no distinction is needed, or when the output supply can be inferred from the output bank/type.
(2) Vcco should be less than or equal to Vcc (Vcco ≤ Vcc).

6.4 Thermal Information

THERMAL METRIC (1)(2)		NJK0036A (WQFN)	UNIT
		36 PINS	
$R_{\theta JA}$	Junction-to-ambient thermal resistance	31.8	°C/W
$R_{\theta JC(top)\ (DAP)}$	Junction-to-case (top) thermal resistance	7.2	

(1) For more information about traditional and new thermal metrics, see the *IC Package Thermal Metrics* application report, SPRA953.
(2) Specification assumes 9 thermal vias connect the die attach pad (DAP) to the embedded copper plane on the 4-layer JEDEC board. These vias play a key role in improving the thermal performance of the package. It is recommended that the maximum number of vias be used in the board layout.

Copyright © 2012–2016, Texas Instruments Incorporated

6.5 Electrical Characteristics

Unless otherwise specified: Vcc = 3.3 V ± 5%, Vcco = 3.3 V ± 5%, 2.5 V ± 5%, -40 °C ≤ T_A ≤ 85 °C, CLKin driven differentially, input slew rate ≥ 3 V/ns. Typical values represent most likely parametric norms at Vcc = 3.3 V, Vcco = 3.3 V, T_A = 25 °C, and at the Recommended Operation Conditions at the time of product characterization and are not ensured. (1)(2)

PARAMETER		TEST CONDITIONS		MIN	TYP	MAX	UNIT
CURRENT CONSUMPTION(3)							
I_{CC_CORE}	Core Supply Current, All Outputs Disabled	CLKinX selected			8.5	10.5	mA
		OSCin selected			10	13.5	mA
I_{CC_PECL}	Additive Core Supply Current, Per LVPECL Bank Enabled				20	26.5	mA
I_{CC_LVDS}	Additive Core Supply Current, Per LVDS Bank Enabled				24	29.5	mA
I_{CC_HCSL}	Additive Core Supply Current, Per HCSL Bank Enabled				29	35	mA
I_{CC_CMOS}	Additive Core Supply Current, LVCMOS Output Enabled				3.5	5.5	mA
I_{CCO_PECL}	Additive Output Supply Current, Per LVPECL Bank Enabled	Includes Output Bank Bias and Load Currents, R_T = 50 Ω to Vcco - 2V on all outputs in bank			100	123	mA
I_{CCO_LVDS}	Additive Output Supply Current, Per LVDS Bank Enabled				20	27.5	mA
I_{CCO_HCSL}	Additive Output Supply Current, Per HCSL Bank Enabled	Includes Output Bank Bias and Load Currents, R_T = 50 Ω on all outputs in bank			50	65	mA
I_{CCO_CMOS}	Additive Output Supply Current, LVCMOS Output Enabled	200 MHz, C_L = 5 pF	Vcco = 3.3 V ± 5%		9	10	mA
			Vcco = 2.5 V ± 5%		7	8	mA
POWER SUPPLY RIPPLE REJECTION (PSRR)							
$PSRR_{PECL}$	Ripple-Induced Phase Spur Level Differential LVPECL Output(4)	100 kHz, 100 mVpp Ripple Injected on Vcco, Vcco = 2.5 V	156.25 MHz		-65		dBc
			312.5 MHz		-63		
$PSRR_{LVDS}$	Ripple-Induced Phase Spur Level Differential LVDS Output(4)		156.25 MHz		-76		dBc
			312.5 MHz		-74		
$PSRR_{HCSL}$	Ripple-Induced Phase Spur Level Differential HCSL Output(4)		156.25 MHz		-72		dBc
			312.5 MHz		-63		
CMOS CONTROL INPUTS (CLKin_SELn, CLKoutX_TYPEn, REFout_EN)							
V_{IH}	High-Level Input Voltage			1.6		Vcc	V
V_{IL}	Low-Level Input Voltage			GND		0.4	V
I_{IH}	High-Level Input Current	V_{IH} = Vcc, Internal pull-down resistor				50	µA
I_{IL}	Low-Level Input Current	V_{IL} = 0 V, Internal pull-down resistor		-5	0.1		µA

(1) The output supply voltages or pins (V_{CCOA}, V_{CCOB}, and V_{CCOC}) will be called V_{CCO} in general when no distinction is needed, or when the output supply can be inferred from the output bank/type.
(2) The Electrical Characteristics tables list ensured specifications under the listed Recommended Operating Conditions except as otherwise modified or specified by the Electrical Characteristics Conditions and/or Notes. Typical specifications are estimations only and are not ensured.
(3) See *Power Supply Recommendations* for more information on current consumption and power dissipation calculations.
(4) Power supply ripple rejection, or PSRR, is defined as the single-sideband phase spur level (in dBc) modulated onto the clock output when a single-tone sinusoidal signal (ripple) is injected onto the Vcco supply. Assuming no amplitude modulation effects and small index modulation, the peak-to-peak deterministic jitter (DJ) can be calculated using the measured single-sideband phase spur level (PSRR) as follows: DJ (ps pk-pk) = [(2 * $10^{(PSRR / 20)}$) / (π * f_{CLK})] * 1E12

Copyright © 2012–2016, Texas Instruments Incorporated

Electrical Characteristics (continued)

Unless otherwise specified: Vcc = 3.3 V ± 5%, Vcco = 3.3 V ± 5%, 2.5 V ± 5%, -40 °C ≤ T_A ≤ 85 °C, CLKin driven differentially, input slew rate ≥ 3 V/ns. Typical values represent most likely parametric norms at Vcc = 3.3 V, Vcco = 3.3 V, T_A = 25 °C, and at the Recommended Operation Conditions at the time of product characterization and are not ensured. (1)(2)

PARAMETER		TEST CONDITIONS		MIN	TYP	MAX	UNIT
CLOCK INPUTS (CLKin0/CLKin0*, CLKin1/CLKin1*)							
f_{CLKin}	Input Frequency Range (5)	Functional up to 3.1 GHz Output frequency range and timing specified per output type (refer to LVPECL, LVDS, HCSL, LVCMOS output specifications)		DC		3.1	GHz
V_{IHD}	Differential Input High Voltage	CLKin driven differentially				Vcc	V
V_{ILD}	Differential Input Low Voltage			GND			V
V_{ID}	Differential Input Voltage Swing (6)			0.15		1.3	V
V_{CMD}	Differential Input Common Mode Voltage	V_{ID} = 150 mV		0.25		Vcc - 1.2	V
		V_{ID} = 350 mV		0.25		Vcc - 1.1	
		V_{ID} = 800 mV		0.25		Vcc -0.9	
V_{IH}	Single-Ended Input High Voltage	CLKinX driven single-ended (AC or DC coupled), CLKinX* AC coupled to GND or externally biased within V_{CM} range				Vcc	V
V_{IL}	Single-Ended Input Low Voltage			GND			V
V_{I_SE}	Single-Ended Input Voltage Swing (7) (8)			0.3		2	Vpp
V_{CM}	Single-Ended Input Common Mode Voltage			0.25		Vcc - 1.2	V
ISO_{MUX}	Mux Isolation, CLKin0 to CLKin1	f_{OFFSET} > 50 kHz, P_{CLKinX} = 0 dBm	f_{CLKin0} = 100 MHz		-84		dBc
			f_{CLKin0} = 200 MHz		-82		
			f_{CLKin0} = 500 MHz		-71		
			f_{CLKin0} = 1000 MHz		-65		
CRYSTAL INTERFACE (OSCin, OSCout)							
F_{CLK}	External Clock Frequency Range (5)	OSCin driven single-ended, OSCout floating				250	MHz
F_{XTAL}	Crystal Frequency Range	Fundamental mode crystal ESR ≤ 200 Ω (10 to 30 MHz) ESR ≤ 125 Ω (30 to 40 MHz) (9)		10		40	MHz
C_{IN}	OSCin Input Capacitance				4		pF

(5) Specification is ensured by characterization and is not tested in production.
(6) See *Differential Voltage Measurement Terminology* for definition of V_{ID} and V_{OD} voltages.
(7) Parameter is specified by design, not tested in production.
(8) For clock input frequency ≥ 100 MHz, CLKinX can be driven with single-ended (LVCMOS) input swing up to 3.3 Vpp. For clock input frequency < 100 MHz, the single-ended input swing should be limited to 2 Vpp max to prevent input saturation (refer to *Driving the Clock Inputs* for interfacing 2.5 V/3.3 V LVCMOS clock input < 100 MHz to CLKinX).
(9) The ESR requirements stated must be met to ensure that the oscillator circuitry has no startup issues. However, lower ESR values for the crystal may be necessary to stay below the maximum power dissipation (drive level) specification of the crystal. Refer to *Crystal Interface* for crystal drive level considerations.

Copyright © 2012–2016, Texas Instruments Incorporated

Electrical Characteristics (continued)

Unless otherwise specified: Vcc = 3.3 V ± 5%, Vcco = 3.3 V ± 5%, 2.5 V ± 5%, -40 °C ≤ T_A ≤ 85 °C, CLKin driven differentially, input slew rate ≥ 3 V/ns. Typical values represent most likely parametric norms at Vcc = 3.3 V, Vcco = 3.3 V, T_A = 25 °C, and at the Recommended Operation Conditions at the time of product characterization and are not ensured. (1)(2)

PARAMETER		TEST CONDITIONS		MIN	TYP	MAX	UNIT
LVPECL OUTPUTS (CLKoutAn/CLKoutAn*, CLKoutBn/CLKoutBn*)							
f_{CLKout_FS}	Maximum Output Frequency Full V_{OD} Swing (5)(10)	V_{OD} ≥ 600 mV, R_L = 100 Ω differential	Vcco = 3.3 V ± 5%, R_T = 160 Ω to GND	1.0	1.2		GHz
			Vcco = 2.5 V ± 5%, R_T = 91 Ω to GND	0.75	1.0		
f_{CLKout_RS}	Maximum Output Frequency Reduced V_{OD} Swing (5)(10)	V_{OD} ≥ 400 mV, R_L = 100 Ω differential	Vcco = 3.3 V ± 5%, R_T = 160 Ω to GND	1.5	3.1		GHz
			Vcco = 2.5 V ± 5%, R_T = 91 Ω to GND	1.5	2.3		
$Jitter_{ADD}$	Additive RMS Jitter, Integration Bandwidth 10 kHz to 20 MHz (5)(11)(12)	Vcco = 2.5 V ± 5%: R_T = 91 Ω to GND, Vcco = 3.3 V ± 5%: R_T = 160 Ω to GND, R_L = 100 Ω differential	CLKin: 100 MHz, Slew rate ≥ 3 V/ns		77	98	fs
			CLKin: 156.25 MHz, Slew rate ≥ 3 V/ns		54	78	
$Jitter_{ADD}$	Additive RMS Jitter Integration Bandwidth 1 MHz to 20 MHz (11)	Vcco = 3.3 V, R_T = 160 Ω to GND, R_L = 100 Ω differential	CLKin: 100 MHz, Slew rate ≥ 3 V/ns		59		fs
			CLKin: 156.25 MHz, Slew rate ≥ 2.7 V/ns		64		
			CLKin: 625 MHz, Slew rate ≥ 3 V/ns		30		
$Jitter_{ADD}$	Additive RMS Jitter with LVPECL clock source from LMK03806 (11)(13)	Vcco = 3.3 V, R_T = 160 Ω to GND, R_L = 100 Ω differential	CLKin: 156.25 MHz, J_{SOURCE} = 190 fs RMS (10 kHz to 1 MHz)		20		fs
			CLKin: 156.25 MHz, J_{SOURCE} = 195 fs RMS (12 kHz to 20 MHz)		51		
Noise Floor	Noise Floor f_{OFFSET} ≥ 10 MHz (14)(15)	Vcco = 3.3 V, R_T = 160 Ω to GND, R_L = 100 Ω differential	CLKin: 100 MHz, Slew rate ≥ 3 V/ns		-162.5		dBc/Hz
			CLKin: 156.25 MHz, Slew rate ≥ 2.7 V/ns		-158.1		
			CLKin: 625 MHz, Slew rate ≥ 3 V/ns		-154.4		
DUTY	Duty Cycle (5)	50% input clock duty cycle		45%		55%	
V_{OH}	Output High Voltage	T_A = 25 °C, DC Measurement, R_T = 50 Ω to Vcco - 2 V		Vcco - 1.2	Vcco - 0.9	Vcco - 0.7	V
V_{OL}	Output Low Voltage			Vcco - 2.0	Vcco - 1.75	Vcco - 1.5	V
V_{OD}	Output Voltage Swing (6)			600	830	1000	mV

(10) See *Typical Characteristics* for output operation over frequency.
(11) For the 100 MHz and 156.25 MHz clock input conditions, Additive RMS Jitter (J_{ADD}) is calculated using Method #1: J_{ADD} = SQRT(J_{OUT}^2 - J_{SOURCE}^2), where J_{OUT} is the total RMS jitter measured at the output driver and J_{SOURCE} is the RMS jitter of the clock source applied to CLKin. For the 625 MHz clock input condition, Additive RMS Jitter is approximated using Method #2: J_{ADD} = SQRT($2*10^{dBc/10}$) / ($2*\pi*f_{CLK}$), where dBc is the phase noise power of the Output Noise Floor integrated from 1 to 20 MHz bandwidth. The phase noise power can be calculated as: dBc = Noise Floor + $10*\log_{10}$(20 MHz - 1 MHz). The additive RMS jitter was approximated for 625 MHz using Method #2 because the RMS jitter of the clock source was not sufficiently low enough to allow practical use of Method #1. Refer to the "Noise Floor vs. CLKin Slew Rate" and "RMS Jitter vs. CLKin Slew Rate" plots in *Typical Characteristics*.
(12) 100 MHz and 156.25 MHz input source from Rohde & Schwarz SMA100A Low-Noise Signal Generator and Sine-to-Square-wave Conversion block.
(13) 156.25 MHz LVPECL clock source from LMK03806 with 20 MHz crystal reference (crystal part number: ECS-200-20-30BU-DU). J_{SOURCE} = 190 fs RMS (10 kHz to 1 MHz) and 195 fs RMS (12 kHz to 20 MHz). Refer to the LMK03806 datasheet for more information.
(14) The noise floor of the output buffer is measured as the far-out phase noise of the buffer. Typically this offset is ≥ 10 MHz, but for lower frequencies this measurement offset can be as low as 5 MHz due to measurement equipment limitations.
(15) Phase noise floor will degrade as the clock input slew rate is reduced. Compared to a single-ended clock, a differential clock input (LVPECL, LVDS) will be less susceptible to degradation in noise floor at lower slew rates due to its common mode noise rejection. However, it is recommended to use the highest possible input slew rate for differential clocks to achieve optimal noise floor performance at the device outputs.

Copyright © 2012–2016, Texas Instruments Incorporated

Electrical Characteristics (continued)

Unless otherwise specified: Vcc = 3.3 V ± 5%, Vcco = 3.3 V ± 5%, 2.5 V ± 5%, -40 °C ≤ T_A ≤ 85 °C, CLKin driven differentially, input slew rate ≥ 3 V/ns. Typical values represent most likely parametric norms at Vcc = 3.3 V, Vcco = 3.3 V, T_A = 25 °C, and at the Recommended Operation Conditions at the time of product characterization and are not ensured. (1)(2)

PARAMETER		TEST CONDITIONS		MIN	TYP	MAX	UNIT
t_R	Output Rise Time 20% to 80% (7)	R_T = 160 Ω to GND, Uniform transmission line up to 10 in. with 50-Ω characteristic impedance, R_L = 100 Ω differential, C_L ≤ 5 pF			175	300	ps
t_F	Output Fall Time 80% to 20% (7)				175	300	ps
LVDS OUTPUTS (CLKoutAn/CLKoutAn*, CLKoutBn/CLKoutBn*)							
f_{CLKout_FS}	Maximum Output Frequency Full V_{OD} Swing (5)(10)	V_{OD} ≥ 250 mV, R_L = 100 Ω differential		1.0	1.6		GHz
f_{CLKout_RS}	Maximum Output Frequency Reduced V_{OD} Swing (5)(10)	V_{OD} ≥ 200 mV, R_L = 100 Ω differential		1.5	2.1		GHz
$Jitter_{ADD}$	Additive RMS Jitter, Integration Bandwidth 10 kHz to 20 MHz (5)(11)(12)	R_L = 100 Ω differential	CLKin: 100 MHz, Slew rate ≥ 3 V/ns		94	115	fs
			CLKin: 156.25 MHz, Slew rate ≥ 3 V/ns		70	90	
$Jitter_{ADD}$	Additive RMS Jitter Integration Bandwidth 1 MHz to 20 MHz (11)	Vcco = 3.3 V, R_L = 100 Ω differential	CLKin: 100 MHz, Slew rate ≥ 3 V/ns		89		fs
			CLKin: 156.25 MHz, Slew rate ≥ 2.7 V/ns		77		
			CLKin: 625 MHz, Slew rate ≥ 3 V/ns		37		
Noise Floor	Noise Floor f_{OFFSET} ≥ 10 MHz (14)(15)	Vcco = 3.3 V, R_L = 100 Ω differential	CLKin: 100 MHz, Slew rate ≥ 3 V/ns		-159.5		dBc/Hz
			CLKin: 156.25 MHz, Slew rate ≥ 2.7 V/ns		-157.0		
			CLKin: 625 MHz, Slew rate ≥ 3 V/ns		-152.7		
DUTY	Duty Cycle (5)	50% input clock duty cycle		45%		55%	
V_{OD}	Output Voltage Swing (6)	T_A = 25 °C, DC Measurement, R_L = 100 Ω differential		250	400	450	mV
ΔV_{OD}	Change in Magnitude of V_{OD} for Complementary Output States			-50		50	mV
V_{OS}	Output Offset Voltage			1.125	1.25	1.375	V
ΔV_{OS}	Change in Magnitude of V_{OS} for Complementary Output States			-35		35	mV
I_{SA} I_{SB}	Output Short Circuit Current Single Ended	T_A = 25 °C, Single ended outputs shorted to GND		-24		24	mA
I_{SAB}	Output Short Circuit Current Differential	Complementary outputs tied together		-12		12	mA
t_R	Output Rise Time 20% to 80% (7)	Uniform transmission line up to 10 inches with 50-Ω characteristic impedance, R_L = 100 Ω differential, C_L ≤ 5 pF			175	300	ps
t_F	Output Fall Time 80% to 20% (7)				175	300	ps

Copyright © 2012–2016, Texas Instruments Incorporated

Electrical Characteristics (continued)

Unless otherwise specified: Vcc = 3.3 V ± 5%, Vcco = 3.3 V ± 5%, 2.5 V ± 5%, -40 °C ≤ T_A ≤ 85 °C, CLKin driven differentially, input slew rate ≥ 3 V/ns. Typical values represent most likely parametric norms at Vcc = 3.3 V, Vcco = 3.3 V, T_A = 25 °C, and at the Recommended Operation Conditions at the time of product characterization and are not ensured. (1)(2)

PARAMETER		TEST CONDITIONS		MIN	TYP	MAX	UNIT
HCSL OUTPUTS (CLKoutAn/CLKoutAn*, CLKoutBn/CLKoutBn*)							
f_{CLKout}	Output Frequency Range(5)	R_L = 50 Ω to GND, C_L ≤ 5 pF		DC		400	MHz
$Jitter_{ADD_PCIe}$	Additive RMS Phase Jitter for PCIe 3.0(5)	PCIe Gen 3, PLL BW = 2–5 MHz, CDR = 10 MHz	CLKin: 100 MHz, Slew rate ≥ 0.6 V/ns		0.03	0.15	ps
$Jitter_{ADD}$	Additive RMS Jitter Integration Bandwidth 1 MHz to 20 MHz(11)	Vcco = 3.3 V, R_T = 50 Ω to GND	CLKin: 100 MHz, Slew rate ≥ 3 V/ns		77		fs
			CLKin: 156.25 MHz, Slew rate ≥ 2.7 V/ns		86		
Noise Floor	Noise Floor f_{OFFSET} ≥ 10 MHz(14)(15)	Vcco = 3.3 V, R_T = 50 Ω to GND	CLKin: 100 MHz, Slew rate ≥ 3 V/ns		-161.3		dBc/Hz
			CLKin: 156.25 MHz, Slew rate ≥ 2.7 V/ns		-156.3		
DUTY	Duty Cycle(5)	50% input clock duty cycle		45%		55%	
V_{OH}	Output High Voltage	T_A = 25 °C, DC Measurement, R_T = 50 Ω to GND		520	810	920	mV
V_{OL}	Output Low Voltage			-150	0.5	150	mV
V_{CROSS}	Absolute Crossing Voltage(5)(16)	R_L = 50 Ω to GND, C_L ≤ 5 pF		160	350	460	mV
ΔV_{CROSS}	Total Variation of V_{CROSS}(5)(16)					140	mV
t_R	Output Rise Time 20% to 80%(7)(16)	250 MHz, Uniform transmission line up to 10 inches with 50-Ω characteristic impedance, R_L = 50 Ω to GND, C_L ≤ 5 pF			300	500	ps
t_F	Output Fall Time 80% to 20%(7)(16)				300	500	ps

(16) AC timing parameters for HCSL or CMOS are dependent on output capacitive loading.

Copyright © 2012–2016, Texas Instruments Incorporated

Electrical Characteristics (continued)

Unless otherwise specified: Vcc = 3.3 V ± 5%, Vcco = 3.3 V ± 5%, 2.5 V ± 5%, -40 °C ≤ T_A ≤ 85 °C, CLKin driven differentially, input slew rate ≥ 3 V/ns. Typical values represent most likely parametric norms at Vcc = 3.3 V, Vcco = 3.3 V, T_A = 25 °C, and at the Recommended Operation Conditions at the time of product characterization and are not ensured. (1)(2)

PARAMETER		TEST CONDITIONS		MIN	TYP	MAX	UNIT
LVCMOS OUTPUT (REFout)							
f_{CLKout}	Output Frequency Range(5)	C_L ≤ 5 pF		DC		250	MHz
$Jitter_{ADD}$	Additive RMS Jitter Integration Bandwidth 1 MHz to 20 MHz(11)	Vcco = 3.3 V, C_L ≤ 5 pF	100 MHz, Input Slew rate ≥ 3 V/ns		95		fs
Noise Floor	Noise Floor f_{OFFSET} ≥ 10 MHz(14)(15)	Vcco = 3.3 V, C_L ≤ 5 pF	100 MHz, Input Slew rate ≥ 3 V/ns		-159.3		dBc/Hz
DUTY	Duty Cycle(5)	50% input clock duty cycle		45%		55%	
V_{OH}	Output High Voltage	1 mA load		Vcco - 0.1			V
V_{OL}	Output Low Voltage					0.1	V
I_{OH}	Output High Current (Source)	Vo = Vcco / 2	Vcco = 3.3 V		28		mA
			Vcco = 2.5 V		20		
I_{OL}	Output Low Current (Sink)		Vcco = 3.3 V		28		mA
			Vcco = 2.5 V		20		
t_R	Output Rise Time 20% to 80%(7)(16)	250 MHz, Uniform transmission line up to 10 inches with 50-Ω characteristic impedance, R_L = 50 Ω to GND, C_L ≤ 5 pF			225	400	ps
t_F	Output Fall Time 80% to 20%(7)(16)				225	400	ps
t_{EN}	Output Enable Time(17)	C_L ≤ 5 pF				3	cycles
t_{DIS}	Output Disable Time(17)					3	cycles

(17) Output Enable Time is the number of input clock cycles it takes for the output to be enabled after REFout_EN is pulled high. Similarly, Output Disable Time is the number of input clock cycles it takes for the output to be disabled after REFout_EN is pulled low. The REFout_EN signal should have an edge transition much faster than that of the input clock period for accurate measurement.

Copyright © 2012–2016, Texas Instruments Incorporated

Electrical Characteristics (continued)

Unless otherwise specified: Vcc = 3.3 V ± 5%, Vcco = 3.3 V ± 5%, 2.5 V ± 5%, -40 °C ≤ T_A ≤ 85 °C, CLKin driven differentially, input slew rate ≥ 3 V/ns. Typical values represent most likely parametric norms at Vcc = 3.3 V, Vcco = 3.3 V, T_A = 25 °C, and at the Recommended Operation Conditions at the time of product characterization and are not ensured. (1)(2)

PARAMETER		TEST CONDITIONS		MIN	TYP	MAX	UNIT
PROPAGATION DELAY and OUTPUT SKEW							
t_{PD_PECL}	Propagation Delay CLKin-to-LVPECL (7)	R_T = 160 Ω to GND, R_L = 100 Ω differential, C_L ≤ 5 pF		180	360	540	ps
t_{PD_LVDS}	Propagation Delay CLKin-to-LVDS (7)	R_L = 100 Ω differential, CL ≤ 5 pF		200	400	600	ps
t_{PD_HCSL}	Propagation Delay CLKin-to-HCSL (7)(16)	R_T = 50 Ω to GND, C_L ≤ 5 pF		295	590	885	ps
t_{PD_CMOS}	Propagation Delay CLKin-to-LVCMOS (7)(16)	C_L ≤ 5 pF	Vcco = 3.3 V	900	1475	2300	ps
			Vcco = 2.5 V	1000	1550	2700	
$t_{SK(O)}$	Output Skew LVPECL/LVDS/HCSL (5)(16)(18)	Skew specified between any two CLKouts with the same buffer type. Load conditions per output type are the same as propagation delay specifications.			30	50	ps
$t_{SK(PP)}$	Part-to-Part Output Skew LVPECL/LVDS/HCSL (7)(16)(18)				80	120	ps

(18) Output skew is the propagation delay difference between any two outputs with identical output buffer type and equal loading while operating at the same supply voltage and temperature conditions.

Copyright © 2012–2016, Texas Instruments Incorporated

6.6 Typical Characteristics

Unless otherwise specified: Vcc = 3.3 V, Vcco = 3.3 V, T_A = 25 °C, CLKin driven differentially, input slew rate ≥ 3 V/ns. Consult Table 1 at the end of *Typical Characteristics* for graph footnotes.

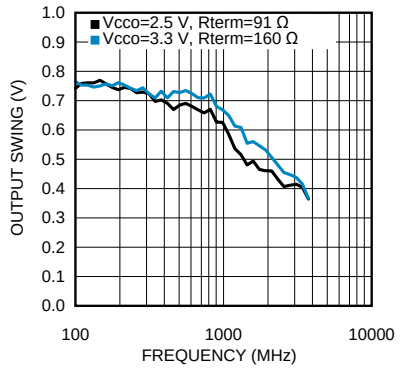

Figure 1. LVPECL Output Swing (V_{OD}) vs. Frequency

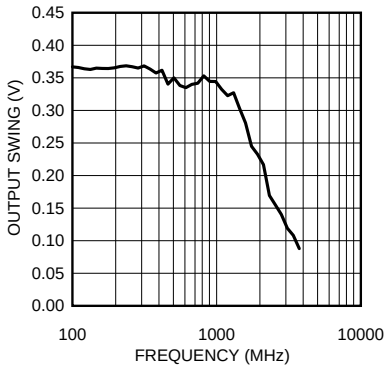

Figure 2. LVDS Output Swing (V_{OD}) vs. Frequency

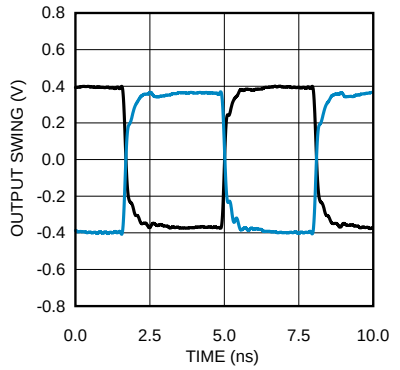

Figure 3. LVPECL Output Swing @ 156.25 MHz

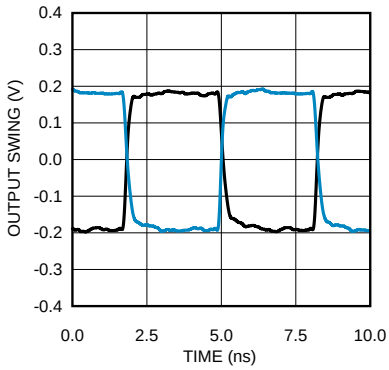

Figure 4. LVDS Output Swing @ 156.25 MHz

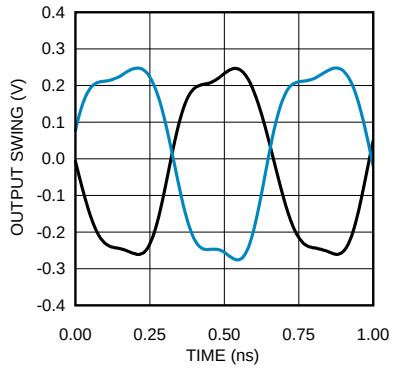

Figure 5. LVPECL Output Swing @ 1.5 GHz

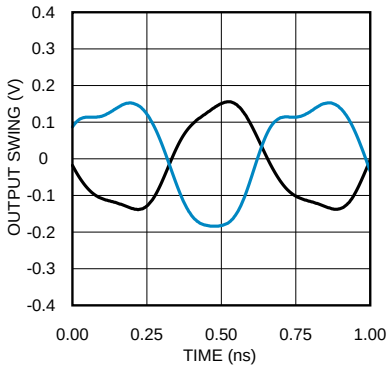

Figure 6. LVDS Output Swing @ 1.5 GHz

Copyright © 2012–2016, Texas Instruments Incorporated

Typical Characteristics (continued)

Unless otherwise specified: Vcc = 3.3 V, Vcco = 3.3 V, T_A = 25 °C, CLKin driven differentially, input slew rate ≥ 3 V/ns. Consult Table 1 at the end of *Typical Characteristics* for graph footnotes.

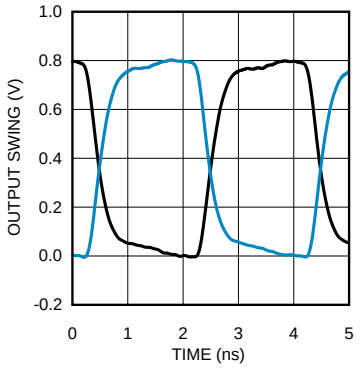

Figure 7. HCSL Output Swing @ 250 MHz

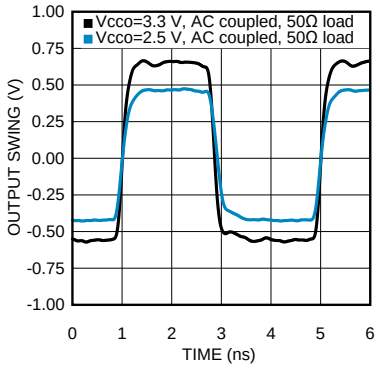

Figure 8. LVCMOS Output Swing @ 250 MHz

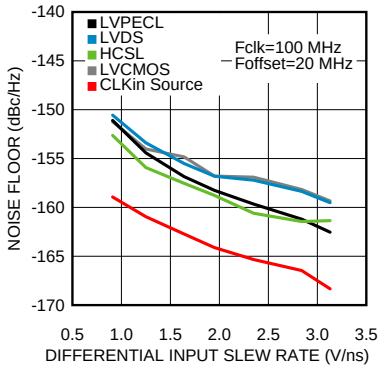

Figure 9. Noise Floor vs. CLKin Slew Rate @ 100 MHz

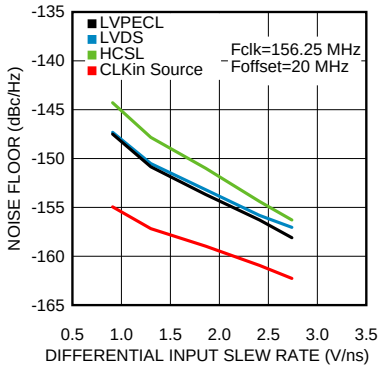

Figure 10. Noise Floor vs. CLKin Slew Rate @ 156.25 MHz

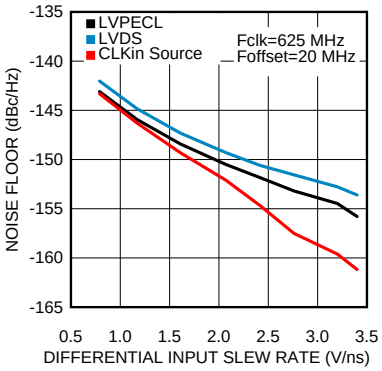

Figure 11. Noise Floor vs. CLKin Slew Rate @ 625 MHz

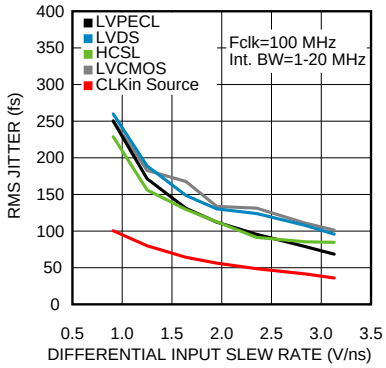

See Note 1 in Graph Notes

Figure 12. RMS Jitter vs. CLKin Slew Rate @ 100 MHz

Typical Characteristics (continued)

Unless otherwise specified: Vcc = 3.3 V, Vcco = 3.3 V, T_A = 25 °C, CLKin driven differentially, input slew rate ≥ 3 V/ns. Consult Table 1 at the end of *Typical Characteristics* for graph footnotes.

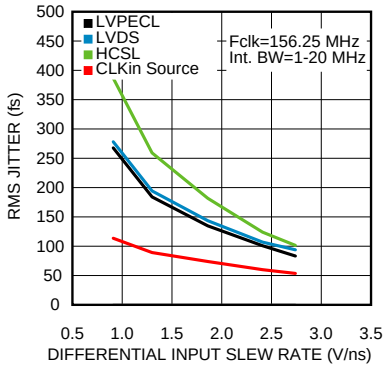

See Note 1 in Graph Notes

Figure 13. RMS Jitter vs. CLKin Slew Rate @ 156.25 MHz

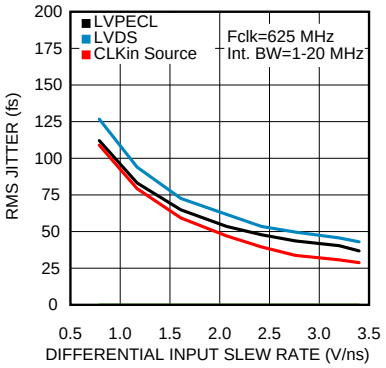

Figure 14. RMS Jitter vs. CLKin Slew Rate @ 625 MHz

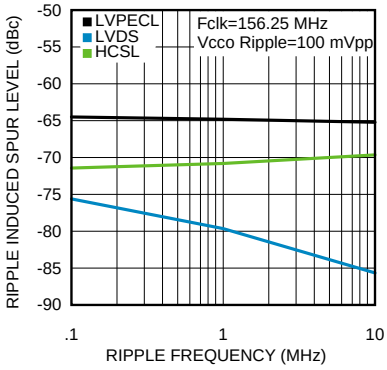

Figure 15. PSRR vs. Ripple Frequency @ 156.25 MHz

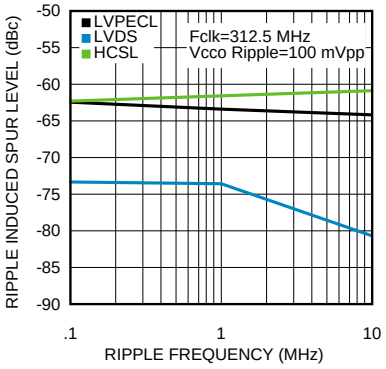

Figure 16. PSRR vs. Ripple Frequency @ 312.5 MHz

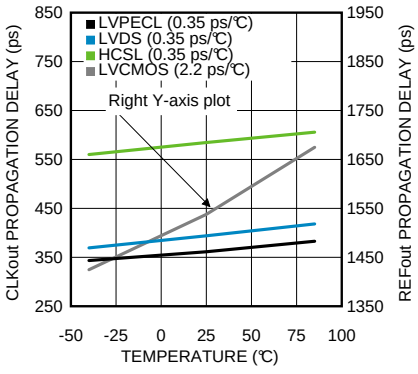

Figure 17. Propagation Delay vs. Temperature

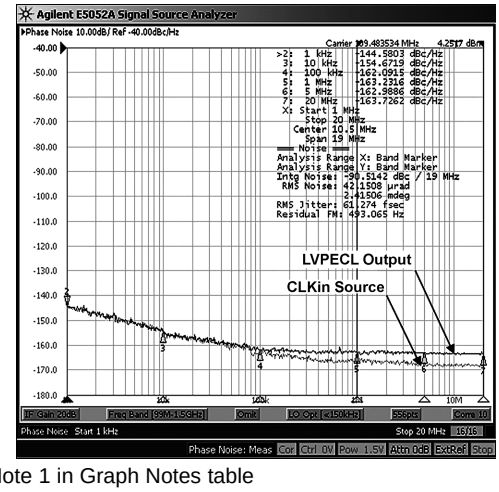

See Note 1 in Graph Notes table

Figure 18. LVPECL Phase Noise @ 100 MHz

Copyright © 2012–2016, Texas Instruments Incorporated

Typical Characteristics (continued)

Unless otherwise specified: Vcc = 3.3 V, Vcco = 3.3 V, T_A = 25 °C, CLKin driven differentially, input slew rate ≥ 3 V/ns. Consult Table 1 at the end of *Typical Characteristics* for graph footnotes.

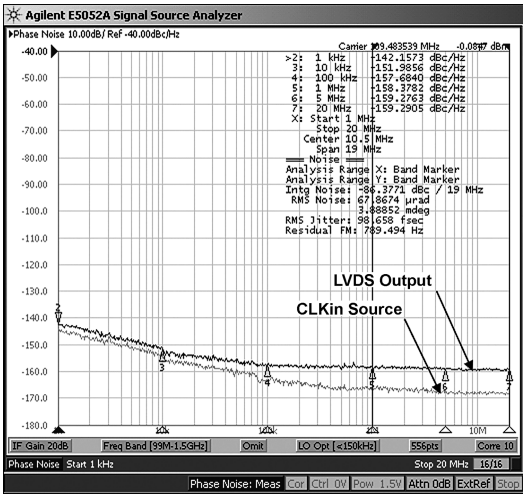

See Note 1 in Graph Notes table

Figure 19. LVDS Phase Noise @ 100 MHz

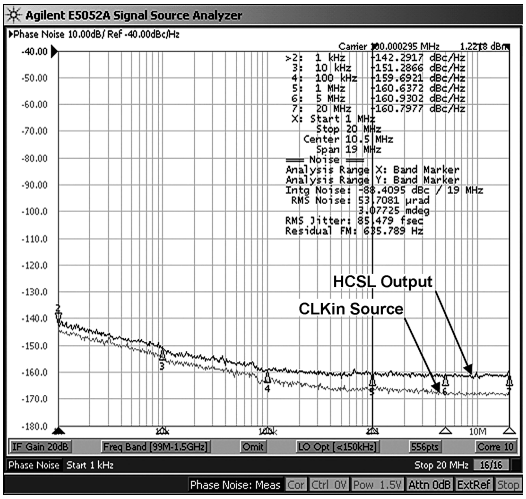

See Note 1 in Graph Notes table

Figure 20. HCSL Phase Noise @ 100 MHz

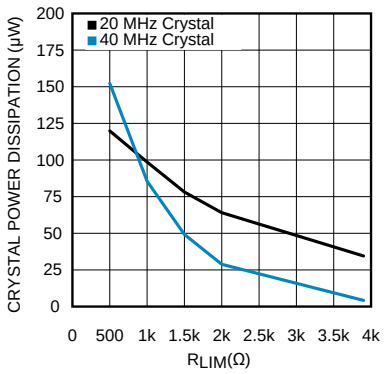

See Notes 2 and 3 in Graph Notes table

Figure 21. Crystal Power Dissipation vs. R_{LIM}

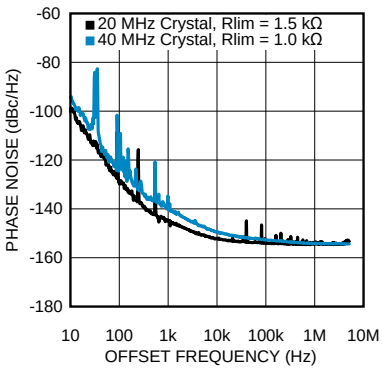

See Notes 2 and 3 in Graph Notes table.

Figure 22. LVDS Phase Noise in Crystal Mode

Table 1. Graph Notes

NOTE	
(1)	The typical RMS jitter values in the plots show the total output RMS jitter (J_{OUT}) for each output buffer type and the source clock RMS jitter (J_{SOURCE}). From these values, the Additive RMS Jitter can be calculated as: J_{ADD} = SQRT(J_{OUT}^2 - J_{SOURCE}^2).
(2)	20 MHz crystal characteristics: Abracon ABL series, AT cut, C_L = 18 pF , C_0 = 4.4 pF measured (7 pF max), ESR = 8.5 Ω measured (40 Ω max), and Drive Level = 1 mW max (100 µW typical).
(3)	40 MHz crystal characteristics: Abracon ABLS2 series, AT cut, C_L = 18 pF , C_0 = 5 pF measured (7 pF max), ESR = 5 Ω measured (40 Ω max), and Drive Level = 1 mW max (100 µW typical).

Copyright © 2012–2016, Texas Instruments Incorporated

7 Parameter Measurement Information

7.1 Differential Voltage Measurement Terminology

The differential voltage of a differential signal can be described by two different definitions causing confusion when reading datasheets or communicating with other engineers. This section will address the measurement and description of a differential signal so that the reader will be able to understand and discern between the two different definitions when used.

The first definition used to describe a differential signal is the absolute value of the voltage potential between the inverting and non-inverting signal. The symbol for this first measurement is typically V_{ID} or V_{OD} depending on if an input or output voltage is being described.

The second definition used to describe a differential signal is to measure the potential of the non-inverting signal with respect to the inverting signal. The symbol for this second measurement is V_{SS} and is a calculated parameter. Nowhere in the IC does this signal exist with respect to ground, it only exists in reference to its differential pair. V_{SS} can be measured directly by oscilloscopes with floating references, otherwise this value can be calculated as twice the value of V_{OD} as described in the first description.

Figure 23 illustrates the two different definitions side-by-side for inputs and Figure 24 illustrates the two different definitions side-by-side for outputs. The V_{ID} (or V_{OD}) definition show the DC levels, V_{IH} and V_{OL} (or V_{OH} and V_{OL}), that the non-inverting and inverting signals toggle between with respect to ground. V_{SS} input and output definitions show that if the inverting signal is considered the voltage potential reference, the non-inverting signal voltage potential is now increasing and decreasing above and below the non-inverting reference. Thus the peak-to-peak voltage of the differential signal can be measured.

V_{ID} and V_{OD} are often defined as volts (V) and V_{SS} is often defined as volts peak-to-peak (V_{PP}).

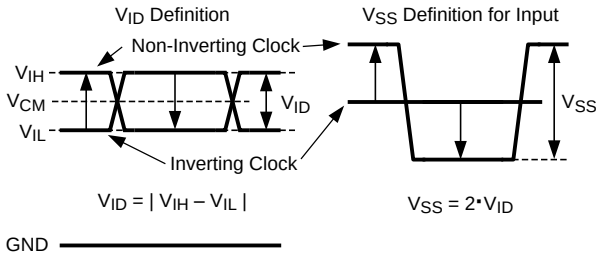

Figure 23. Two Different Definitions for Differential Input Signals

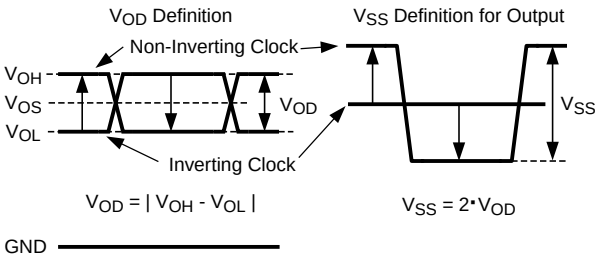

Figure 24. Two Different Definitions for Differential Output Signals

Refer to Application Note AN-912 (literature number SNLA036), *Common Data Transmission Parameters and their Definitions*, for more information.

Copyright © 2012–2016, Texas Instruments Incorporated

8 Detailed Description

8.1 Overview

The LMK00306 is a 6-output differential clock fanout buffer with low additive jitter that can operate up to 3.1 GHz. It features a 3:1 input multiplexer with an optional crystal oscillator input, two banks of 3 differential outputs with multi-mode buffers (LVPECL, LVDS, HCSL, or Hi-Z), one LVCMOS output, and 3 independent output buffer supplies. The input selection and output buffer modes are controlled via pin strapping. The device is offered in a 36-pin WQFN package and leverages much of the high-speed, low-noise circuit design employed in the LMK04800 family of clock conditioners.

8.2 Functional Block Diagram

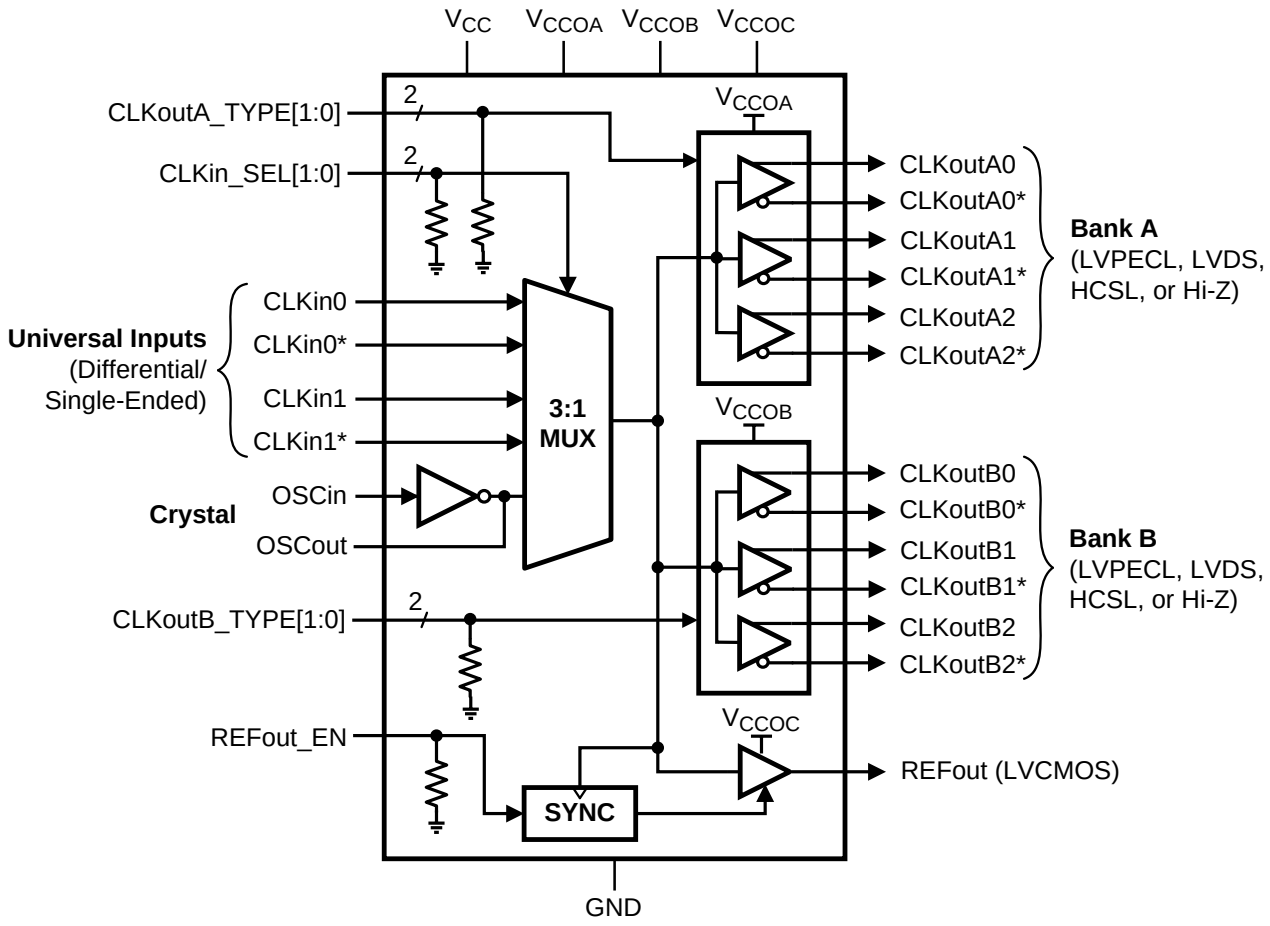

8.3 Feature Description

8.3.1 V_{CC} and V_{CCO} Power Supplies

The LMK00306 has separate 3.3 V core supply (V_{CC}) and 3 independent 3.3 V/2.5 V output power supplies (V_{CCOA}, V_{CCOB}, V_{CCOC}). Output supply operation at 2.5 V enables lower power consumption and output-level compatibility with 2.5 V receiver devices. The output levels for LVPECL (V_{OH}, V_{OL}) and LVCMOS (V_{OH}) are referenced to the respective Vcco supply, while the output levels for LVDS and HCSL are relatively constant over the specified Vcco range. Refer to Power Supply Recommendations for additional supply related considerations, such as power dissipation, power supply bypassing, and power supply ripple rejection (PSRR).

NOTE

Care should be taken to ensure the Vcco voltages do not exceed the Vcc voltage to prevent turning-on the internal ESD protection circuitry.

8.3.2 Clock Inputs

The input clock can be selected from CLKin0/CLKin0*, CLKin1/CLKin1*, or OSCin. Clock input selection is controlled using the CLKin_SEL[1:0] inputs as shown in *Table 2* . Refer to *Driving the Clock Inputs* for clock input requirements. When CLKin0 or CLKin1 is selected, the crystal circuit is powered down. When OSCin is selected, the crystal oscillator circuit will start-up and its clock will be distributed to all outputs. Refer to *Crystal Interface* for more information. Alternatively, OSCin may be be driven by a single-ended clock (up to 250 MHz) instead of a crystal.

Table 2. Input Selection

CLKin_SEL1	CLKin_SEL0	SELECTED INPUT
0	0	CLKin0, CLKin0*
0	1	CLKin1, CLKin1*
1	X	OSCin

Table 3 shows the output logic state vs. input state when either CLKin0/CLKin0* or CLKin1/CLKin1* is selected. When OSCin is selected, the output state will be an inverted copy of the OSCin input state.

Table 3. CLKin Input vs. Output States

STATE of SELECTED CLKin	STATE of ENABLED OUTPUTS
CLKinX and CLKinX* inputs floating	Logic low
CLKinX and CLKinX* inputs shorted together	Logic low
CLKin logic low	Logic low
CLKin logic high	Logic high

Copyright © 2012–2016, Texas Instruments Incorporated

8.3.3 Clock Outputs

The differential output buffer type for Bank A and Bank B outputs can be separately configured using the CLKoutA_TYPE[1:0] and CLKoutB_TYPE[1:0] inputs, respectively, as shown in Table 4. For applications where all differential outputs are not needed, any unused output pin should be left floating with a minimum copper length (see note below) to minimize capacitance and potential coupling and reduce power consumption. If an entire output bank will not be used, it is recommended to disable/Hi-Z the bank to reduce power. Refer to *Termination and Use of Clock Drivers* for more information on output interface and termination techniques.

NOTE

For best soldering practices, the minimum trace length for any unused output pin should extend to include the pin solder mask. This way during reflow, the solder has the same copper area as connected pins. This allows for good, uniform fillet solder joints helping to keep the IC level during reflow.

Table 4. Differential Output Buffer Type Selection

CLKoutX_ TYPE1	CLKoutX_ TYPE0	CLKoutX BUFFER TYPE (BANK A or B)
0	0	LVPECL
0	1	LVDS
1	0	HCSL
1	1	Disabled (Hi-Z)

8.3.3.1 Reference Output

The reference output (REFout) provides a LVCMOS copy of the selected input clock. The LVCMOS output high level is referenced to the Vcco voltage. REFout can be enabled or disabled using the enable input pin, REFout_EN, as shown in Table 5.

Table 5. Reference Output Enable

REFout_EN	REFout State
0	Disabled (Hi-Z)
1	Enabled

The REFout_EN input is internally synchronized with the selected input clock by the SYNC block. This synchronizing function prevents glitches and runt pulses from occurring on the REFout clock when enabled or disabled. REFout will be enabled within 3 cycles (t_{EN}) of the input clock after REFout_EN is toggled high. REFout will be disabled within 3 cycles (t_{DIS}) of the input clock after REFout_EN is toggled low.

When REFout is disabled, the use of a resistive loading can be used to set the output to a predetermined level. For example, if REFout is configured with a 1 kΩ load to ground, then the output will be pulled to low when disabled.

Copyright © 2012–2016, Texas Instruments Incorporated

9 Application and Implementation

NOTE

Information in the following applications sections is not part of the TI component specification, and TI does not warrant its accuracy or completeness. TI's customers are responsible for determining suitability of components for their purposes. Customers should validate and test their design implementation to confirm system functionality.

9.1 Driving the Clock Inputs

The LMK00306 has two universal inputs (CLKin0/CLKin0* and CLKin1/CLKin1*) that can accept AC- or DC-coupled 3.3V/2.5V LVPECL, LVDS, CML, SSTL, and other differential and single-ended signals that meet the input requirements specified in *Electrical Characteristics*. The device can accept a wide range of signals due to its wide input common mode voltage range (V_{CM}) and input voltage swing (V_{ID}) / dynamic range. For 50% duty cycle and DC-balanced signals, AC coupling may also be employed to shift the input signal to within the V_{CM} range. Refer to *Termination and Use of Clock Drivers* for signal interfacing and termination techniques.

To achieve the best possible phase noise and jitter performance, it is mandatory for the input to have high slew rate of 3 V/ns (differential) or higher. Driving the input with a lower slew rate will degrade the noise floor and jitter. For this reason, a differential signal input is recommended over single-ended because it typically provides higher slew rate and common-mode-rejection. Refer to the "Noise Floor vs. CLKin Slew Rate" and "RMS Jitter vs. CLKin Slew Rate" plots in *Typical Characteristics*.

While it is recommended to drive the CLKin/CLKin* pair with a differential signal input, it is possible to drive it with a single-ended clock provided it conforms to the Single-Ended Input specifications for CLKin pins listed in the *Electrical Characteristics*. For large single-ended input signals, such as 3.3V or 2.5V LVCMOS, a 50 Ω load resistor should be placed near the input for signal attenuation to prevent input overdrive as well as for line termination to minimize reflections. Again, the single-ended input slew rate should be as high as possible to minimize performance degradation. The CLKin input has an internal bias voltage of about 1.4 V, so the input can be AC coupled as shown in Figure 25. The output impedance of the LVCMOS driver plus Rs should be close to 50 Ω to match the characteristic impedance of the transmission line and load termination.

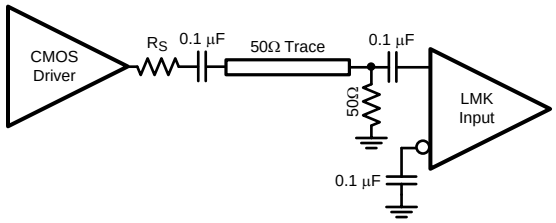

Figure 25. Single-Ended LVCMOS Input, AC Coupling

A single-ended clock may also be DC coupled to CLKinX as shown in Figure 26. A 50-Ω load resistor should be placed near the CLKinX input for signal attenuation and line termination. Because half of the single-ended swing of the driver ($V_{O,PP}$ / 2) drives CLKinX, CLKinX* should be externally biased to the midpoint voltage of the attenuated input swing (($V_{O,PP}$ / 2) × 0.5). The external bias voltage should be within the specified input common voltage (V_{CM}) range. This can be achieved using external biasing resistors in the kΩ range (R_{B1} and R_{B2}) or another low-noise voltage reference. This will ensure the input swing crosses the threshold voltage at a point where the input slew rate is the highest.

If the LVCMOS driver cannot achieve sufficient swing with a DC-terminated 50Ω load at the CLKinX input as shown in Figure 26, then consider connecting the 50Ω load termination to ground through a capacitor (C_{AC}). This AC termination blocks the DC load current on the driver, so the voltage swing at the input is determined by the voltage divider formed by the source (Ro+Rs) and 50Ω load resistors. The value for C_{AC} depends on the trace delay, Td, of the 50Ω transmission line, where C_{AC} >= 3*Td/50Ω.

Copyright © 2012–2016, Texas Instruments Incorporated

Driving the Clock Inputs (continued)

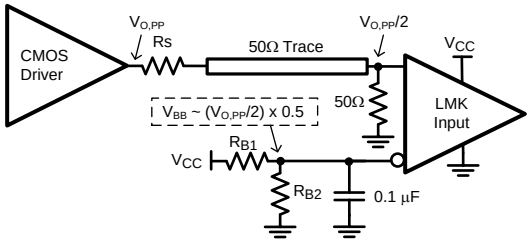

Figure 26. Single-Ended LVCMOS Input, DC Coupling with Common Mode Biasing

If the crystal oscillator circuit is not used, it is possible to drive the OSCin input with an single-ended external clock as shown in Figure 27. The input clock should be AC coupled to the OSCin pin, which has an internally-generated input bias voltage, and the OSCout pin should be left floating. While OSCin provides an alternative input to multiplex an external clock, it is recommended to use either universal input (CLKinX) since it offers higher operating frequency, better common mode and power supply noise rejection, and greater performance over supply voltage and temperature variations.

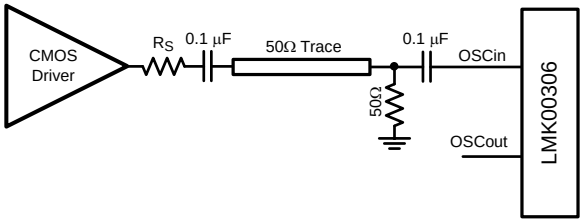

Figure 27. Driving OSCin with a Single-Ended Input

9.2 Crystal Interface

The LMK00306 has an integrated crystal oscillator circuit that supports a fundamental mode, AT-cut crystal. The crystal interface is shown in *Figure 28*.

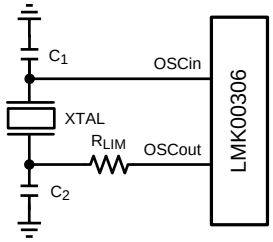

Figure 28. Crystal Interface

The load capacitance (C_L) is specific to the crystal, but usually on the order of 18 - 20 pF. While C_L is specified for the crystal, the OSCin input capacitance (C_{IN} = 4 pF typical) of the device and PCB stray capacitance (C_{STRAY} ~ 1~3 pF) can affect the discrete load capacitor values, C_1 and C_2.

For the parallel resonant circuit, the discrete capacitor values can be calculated as follows:

$$C_L = (C_1 * C_2) / (C_1 + C_2) + C_{IN} + C_{STRAY} \quad (1)$$

Typically, $C_1 = C_2$ for optimum symmetry, so Equation 1 can be rewritten in terms of C_1 only:

$$C_L = C_1^2 / (2 * C_1) + C_{IN} + C_{STRAY} \quad (2)$$

Finally, solve for C_1:

$$C_1 = (C_L - C_{IN} - C_{STRAY})*2 \quad (3)$$

Copyright © 2012–2016, Texas Instruments Incorporated

Crystal Interface (continued)

Electrical Characteristics provides crystal interface specifications with conditions that ensure start-up of the crystal, but it does not specify crystal power dissipation. The designer will need to ensure the crystal power dissipation does not exceed the maximum drive level specified by the crystal manufacturer. Overdriving the crystal can cause premature aging, frequency shift, and eventual failure. Drive level should be held at a sufficient level necessary to start-up and maintain steady-state operation.

The power dissipated in the crystal, P_{XTAL}, can be computed by:

$$P_{XTAL} = I_{RMS}^2 * R_{ESR}*(1 + C_0/C_L)^2 \quad (4)$$

where

- I_{RMS} is the RMS current through the crystal.
- R_{ESR} is the max. equivalent series resistance specified for the crystal
- C_L is the load capacitance specified for the crystal
- C_0 is the min. shunt capacitance specified for the crystal

I_{RMS} can be measured using a current probe (e.g. Tektronix CT-6 or equivalent) placed on the leg of the crystal connected to OSCout with the oscillation circuit active.

As shown in *Figure 28* , an external resistor, R_{LIM}, can be used to limit the crystal drive level, if necessary. If the power dissipated in the selected crystal is higher than the drive level specified for the crystal with R_{LIM} shorted, then a larger resistor value is mandatory to avoid overdriving the crystal. However, if the power dissipated in the crystal is less than the drive level with R_{LIM} shorted, then a zero value for R_{LIM} can be used. As a starting point, a suggested value for R_{LIM} is 1.5 kΩ.

9.3 Termination and Use of Clock Drivers

When terminating clock drivers keep in mind these guidelines for optimum phase noise and jitter performance:

- Transmission line theory should be followed for good impedance matching to prevent reflections.
- Clock drivers should be presented with the proper loads.
  - LVDS outputs are current drivers and require a closed current loop.
  - HCSL drivers are switched current outputs and require a DC path to ground via 50 Ω termination.
  - LVPECL outputs are open emitter and require a DC path to ground.
- Receivers should be presented with a signal biased to their specified DC bias level (common mode voltage) for proper operation. Some receivers have self-biasing inputs that automatically bias to the proper voltage level; in this case, the signal should normally be AC coupled.

It is possible to drive a non-LVPECL or non-LVDS receiver with a LVDS or LVPECL driver as long as the above guidelines are followed. Check the datasheet of the receiver or input being driven to determine the best termination and coupling method to be sure the receiver is biased at the optimum DC voltage (common mode voltage).

9.3.1 Termination for DC Coupled Differential Operation

For DC coupled operation of an LVDS driver, terminate with 100 Ω as close as possible to the LVDS receiver as shown in Figure 29.

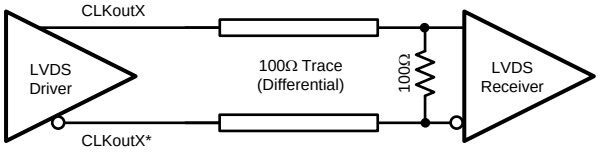

Figure 29. Differential LVDS Operation, DC Coupling, No Biasing by the Receiver

Copyright © 2012–2016, Texas Instruments Incorporated

Termination and Use of Clock Drivers (continued)

For DC coupled operation of an HCSL driver, terminate with 50 Ω to ground near the driver output as shown in Figure 30. Series resistors, Rs, may be used to limit overshoot due to the fast transient current. Because HCSL drivers require a DC path to ground, AC coupling is not allowed between the output drivers and the 50 Ω termination resistors.

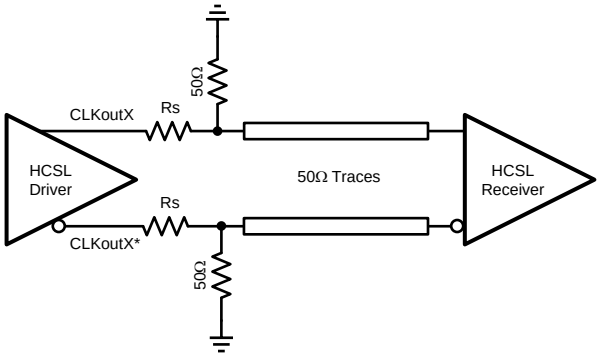

Figure 30. HCSL Operation, DC Coupling

For DC coupled operation of an LVPECL driver, terminate with 50 Ω to Vcco – 2 V as shown in Figure 31. Alternatively terminate with a Thevenin equivalent circuit as shown in Figure 32 for Vcco (output driver supply voltage) = 3.3 V and 2.5 V. In the Thevenin equivalent circuit, the resistor dividers set the output termination voltage (V_{TT}) to Vcco - 2 V.

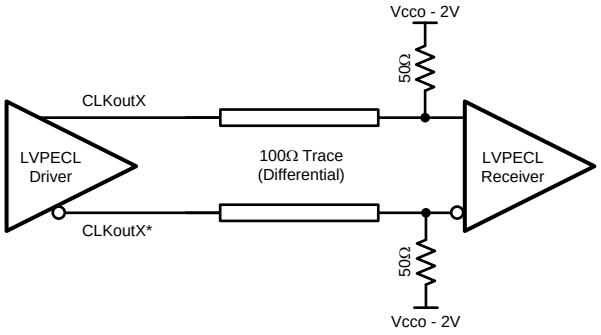

Figure 31. Differential LVPECL Operation, DC Coupling

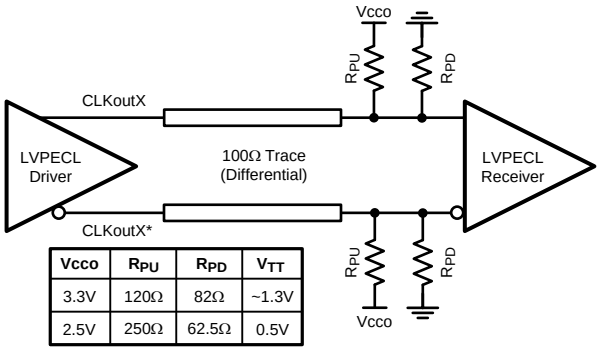

Vcco	R_{PU}	R_{PD}	V_{TT}
3.3V	120Ω	82Ω	~1.3V
2.5V	250Ω	62.5Ω	0.5V

Figure 32. Differential LVPECL Operation, DC Coupling, Thevenin Equivalent

Copyright © 2012–2016, Texas Instruments Incorporated

Termination and Use of Clock Drivers (continued)

9.3.2 Termination for AC Coupled Differential Operation

AC coupling allows for shifting the DC bias level (common mode voltage) when driving different receiver standards. Since AC coupling prevents the driver from providing a DC bias voltage at the receiver, it is important to ensure the receiver is biased to its ideal DC level.

When driving differential receivers with an LVDS driver, the signal may be AC coupled by adding DC blocking capacitors; however the proper DC bias point needs to be established at both the driver side and the receiver side. The recommended termination scheme depends on whether the differential receiver has integrated termination resistors or not.

When driving a differential receiver without internal 100 Ω differential termination, the AC coupling capacitors should be placed between the load termination resistor and the receiver to allow a DC path for proper biasing of the LVDS driver. This is shown in Figure 33. The load termination resistor and AC coupling capacitors should be placed as close as possible to the receiver inputs to minimize stub length. The receiver can be biased internally or externally to a reference voltage within the receiver's common mode input range through resistors in the kilo-ohm range.

When driving a differential receiver with internal 100 Ω differential termination, a source termination resistor should be placed before the AC coupling capacitors for proper DC biasing of the driver as shown in Figure 34. However, with a 100-Ω resistor at the source and the load (i.e. double terminated), the equivalent resistance seen by the LVDS driver is 50 Ω which causes the effective signal swing at the input to be reduced by half. If a self-terminated receiver requires input swing greater than 250 mVpp (differential) as well as AC coupling to its inputs, then the LVDS driver with the double-terminated arrangement in Figure 34 may not meet the minimum input swing requirement; alternatively, the LVPECL or HCSL output driver format with AC coupling is recommended to meet the minimum input swing required by the self-terminated receiver.

When using AC coupling with LVDS outputs, there may be a startup delay observed in the clock output due to capacitor charging. The examples in Figure 33 and Figure 34 use 0.1 µF capacitors, but this value may be adjusted to meet the startup requirements for the particular application.

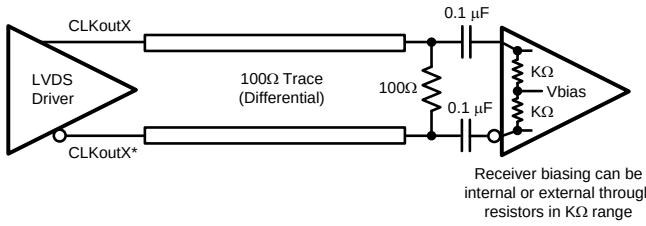

(a) LVDS DC termination with AC coupling at load

Figure 33. Differential LVDS Operation with AC Coupling to Receivers Without Internal 100 Ω Termination

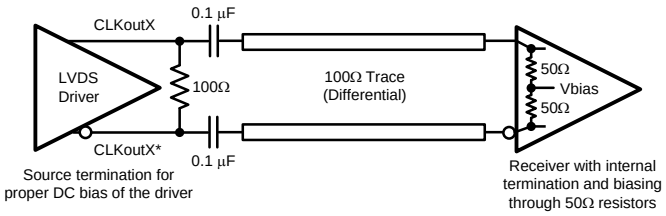

(b) LVDS DC termination with AC coupling at source and internal termination at load. Double termination at source and load will reduce swing by half.

Figure 34. Differential LVDS Operation with AC Coupling to Receivers With Internal 100 Ω Termination

LVPECL drivers require a DC path to ground. When AC coupling an LVPECL signal use 160 Ω emitter resistors (or 91 Ω for Vcco = 2.5 V) close to the LVPECL driver to provide a DC path to ground as shown in Figure 38. For proper receiver operation, the signal should be biased to the DC bias level (common mode voltage) specified by the receiver. The typical DC bias voltage (common mode voltage) for LVPECL receivers is 2 V. Alternatively, a Thevenin equivalent circuit forms a valid termination as shown in Figure 35 for Vcco = 3.3 V and 2.5 V. Note: this Thevenin circuit is different from the DC coupled example in Figure 32, since the voltage divider is setting the input common mode voltage of the receiver.

Copyright © 2012–2016, Texas Instruments Incorporated

Termination and Use of Clock Drivers (continued)

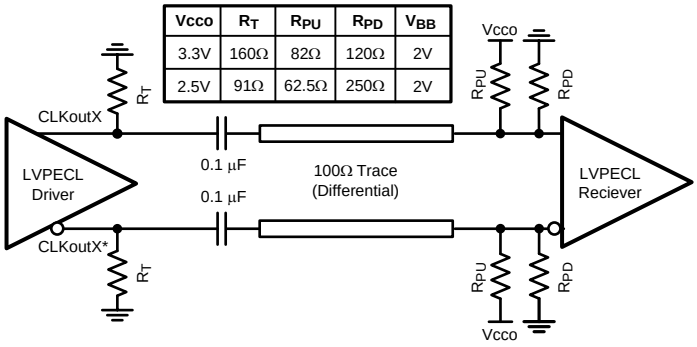

Vcco	RT	RPU	RPD	VBB
3.3V	160Ω	82Ω	120Ω	2V
2.5V	91Ω	62.5Ω	250Ω	2V

Figure 35. Differential LVPECL Operation, AC Coupling, Thevenin Equivalent

9.3.3 Termination for Single-Ended Operation

A balun can be used with either LVDS or LVPECL drivers to convert the balanced, differential signal into an unbalanced, single-ended signal.

It is possible to use an LVPECL driver as one or two separate 800 mV p-p signals. When DC coupling one of the LMK00306 LVPECL driver of a CLKoutX/CLKoutX* pair, be sure to properly terminate the unused driver. When DC coupling on of the LMK00306 LVPECL drivers, the termination should be 50 Ω to Vcco - 2 V as shown in Figure 36. The Thevenin equivalent circuit is also a valid termination as shown in Figure 37 for Vcco = 3.3 V.

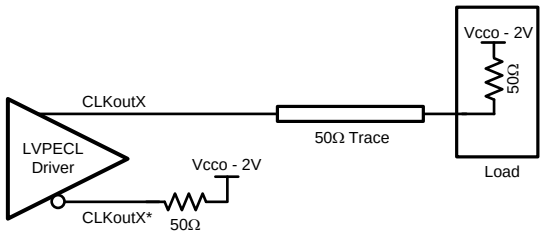

Figure 36. Single-Ended LVPECL Operation, DC Coupling

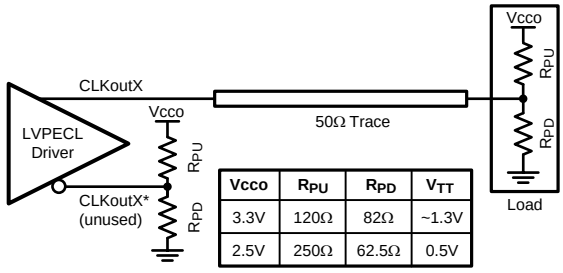

Vcco	RPU	RPD	VTT
3.3V	120Ω	82Ω	~1.3V
2.5V	250Ω	62.5Ω	0.5V

Figure 37. Single-Ended LVPECL Operation, DC Coupling, Thevenin Equivalent

Copyright © 2012–2016, Texas Instruments Incorporated

Termination and Use of Clock Drivers (continued)

When AC coupling an LVPECL driver use a 160 Ω emitter resistor (or 91 Ω for Vcco = 2.5 V) to provide a DC path to ground and ensure a 50 Ω termination with the proper DC bias level for the receiver. The typical DC bias voltage for LVPECL receivers is 2 V. If the companion driver is not used, it should be terminated with either a proper AC or DC termination. This latter example of AC coupling a single-ended LVPECL signal can be used to measure single-ended LVPECL performance using a spectrum analyzer or phase noise analyzer. When using most RF test equipment no DC bias point (0 VDC) is required for safe and proper operation. The internal 50 Ω termination the test equipment correctly terminates the LVPECL driver being measured as shown in Figure 38. When using only one LVPECL driver of a CLKoutX/CLKoutX* pair, be sure to properly terminated the unused driver.

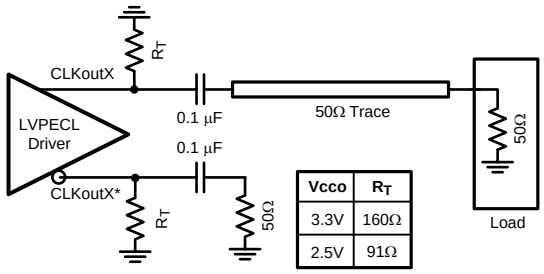

Figure 38. Single-Ended LVPECL Operation, AC Coupling

Copyright © 2012–2016, Texas Instruments Incorporated

10 Power Supply Recommendations

10.1 Power Supply Sequencing

When powering the Vcc and Vcco pins from separate supply rails, it is recommended for the supplies to reach their regulation point at approximately the same time while ramping up, or reach ground potential at the same time while ramping down. Using simultaneous or ratiometric power supply sequencing prevents internal current flow from Vcc to Vcco pins that could occur when Vcc is powered before Vcco.

10.2 Current Consumption and Power Dissipation Calculations

The current consumption values specified in *Electrical Characteristics* can be used to calculate the total power dissipation and IC power dissipation for any device configuration. The total V_{CC} core supply current (I_{CC_TOTAL}) can be calculated using Equation 5:

$$\mathbf{I_{CC_TOTAL} = I_{CC_CORE} + I_{CC_BANK_A} + I_{CC_BANK_B} + I_{CC_CMOS}}$$

where

- I_{CC_CORE} is the current for core logic and input blocks and depends on selected input (CLKinX or OSCin).
- $I_{CC_BANK_A}$ is the current for Bank A and depends on output type (I_{CC_PECL}, I_{CC_LVDS}, I_{CC_HCSL}, or 0 mA if disabled).
- $I_{CC_BANK_B}$ is the current for Bank B and depends on output type (I_{CC_PECL}, I_{CC_LVDS}, I_{CC_HCSL}, or 0 mA if disabled).
- I_{CC_CMOS} is the current for the LVCMOS output (or 0 mA if REFout is disabled). (5)

Since the output supplies (V_{CCOA}, V_{CCOB}, V_{CCOC}) can be powered from 3 independent voltages, the respective output supply currents ($I_{CCO_BANK_A}$, $I_{CCO_BANK_B}$, and I_{CCO_CMOS}) should be calculated separately.

I_{CCO_BANK} for either Bank A or B can be directly taken from the corresponding output supply current spec (I_{CCO_PECL}, I_{CCO_LVDS}, or I_{CCO_HCSL}) **provided the output loading matches the specified conditions**. Otherwise, I_{CCO_BANK} should be calculated as follows:

$$I_{CCO_BANK} = I_{BANK_BIAS} + (N * I_{OUT_LOAD})$$

where

- I_{BANK_BIAS} is the output bank bias current (fixed value).
- I_{OUT_LOAD} is the DC load current per loaded output pair.
- N is the number of loaded output pairs per bank (N = 0 to 3). (6)

Table 6 shows the typical I_{BANK_BIAS} values and I_{OUT_LOAD} expressions for LVPECL, LVDS, and HCSL.

For LVPECL, it is possible to use a larger termination resistor (R_T) to ground instead of terminating with 50 Ω to V_{TT} = Vcco - 2 V; this technique is commonly used to eliminate the extra termination voltage supply (V_{TT}) and potentially reduce device power dissipation at the expense of lower output swing. For example, when Vcco is 3.3 V, a R_T value of 160 Ω to ground will eliminate the 1.3 V termination supply without sacrificing much output swing. In this case, the typical I_{OUT_LOAD} is 25 mA, so I_{CCO_PECL} for a fully-loaded bank reduces to 95 mA (vs. 100 mA with 50 Ω resistors to Vcco – 2 V).

Table 6. Typical Output Bank Bias and Load Currents

CURRENT PARAMETER	LVPECL	LVDS	HCSL
I_{BANK_BIAS}	20 mA	17.4 mA	3.6 mA
I_{OUT_LOAD}	$(V_{OH} - V_{TT})/R_T + (V_{OL} - V_{TT})/R_T$	0 mA (No DC load current)	V_{OH}/R_T

Once the current consumption is known for each supply, the total power dissipation (P_{TOTAL}) can be calculated as:

$$\mathbf{P_{TOTAL} = (V_{CC}*I_{CC_TOTAL}) + (V_{CCOA}*I_{CCO_BANK_A}) + (V_{CCOB}*I_{CCO_BANK_B}) + (V_{CCOC}*I_{CCO_CMOS})} \quad (7)$$

Copyright © 2012–2016, Texas Instruments Incorporated

If the device is configured with LVPECL or HCSL outputs, then it is also necessary to calculate the power dissipated in any termination resistors (P_{RT_PECL} and P_{RT_HCSL}) and in any LVPECL termination voltages (P_{VTT_PECL}). The external power dissipation values can be calculated as follows:

$$P_{RT_PECL} \text{ (per LVPECL pair)} = (V_{OH} - V_{TT})^2/R_T + (V_{OL} - V_{TT})^2/R_T \quad (8)$$

$$P_{VTT_PECL} \text{ (per LVPECL pair)} = V_{TT} * [(V_{OH} - V_{TT})/R_T + (V_{OL} - V_{TT})/R_T] \quad (9)$$

$$P_{RT_HCSL} \text{ (per HCSL pair)} = V_{OH}^2 / R_T \quad (10)$$

Finally, the IC power dissipation (P_{DEVICE}) can be computed by subtracting the external power dissipation values from P_{TOTAL} as follows:

$$P_{DEVICE} = P_{TOTAL} - N_1*(P_{RT_PECL} + P_{VTT_PECL}) - N_2*P_{RT_HCSL}$$

where

- N_1 is the number of LVPECL output pairs with termination resistors to V_{TT} (usually Vcco - 2 V or GND).
- N_2 is the number of HCSL output pairs with termination resistors to GND. (11)

10.2.1 Power Dissipation Example: Worst-Case Dissipation

This example shows how to calculate IC power dissipation for a configuration to estimate **worst-case power dissipation**. In this case, the maximum supply voltage and supply current values specified in *Electrical Characteristics* are used.

- $V_{CC} = V_{CCO}$ = 3.465 V. Max I_{CC} and I_{CCO} values.
- CLKin0/CLKin0* input is selected.
- Banks A and B are configured for LVPECL: all outputs terminated with 50 Ω to V_T = Vcco - 2 V.
- REFout is enabled with 5 pF load.
- T_A = 85 °C

Using the power calculations from the previous section and *maximum* supply current specifications, we can compute P_{TOTAL} and P_{DEVICE}.

- From Equation 5: I_{CC_TOTAL} = 10.5 mA + 22.5 mA + 22.5 mA + 5.5 mA = 61 mA
- From I_{CCO_PECL} max spec: $I_{CCO_BANK_A} = I_{CCO_BANK_B}$ = 115 mA
- From Equation 7: P_{TOTAL} = 3.465 V * (61 mA + 115 mA + 115 mA + 10 mA) = 1043 mW
- From Equation 8: $P_{RT_PECL} = ((2.57 \text{ V} - 1.47 \text{ V})^2/50 \Omega) + ((1.72 \text{ V} - 1.47 \text{ V})^2/50 \Omega)$ = 25.5 mW (per output pair)
- From Equation 9: P_{VTT_PECL} = 1.47 V * [((2.57 V - 1.47 V) / 50 Ω) + ((1.72 V - 1.47 V) / 50 Ω)] = 39.5 mW (per output pair)
- From Equation 10: P_{RT_HCSL} = 0 mW (no HCSL outputs)
- From Equation 11: P_{DEVICE} = 1043 mW - (6 * (25.5 mW + 39.5 mW)) - 0 mW = 653 mW

In this worst-case example, the IC device will dissipate about 653 mW or 63% of the total power (1043 mW), while the remaining 37% will be dissipated in the LVPECL emitter resistors (153 mW for 6 pairs) and termination voltage (237 mW into Vcco - 2 V). Based on θ_{JA} of 31.8 °C/W, the estimated die junction temperature would be about 21 °C above ambient, or 106 °C when T_A = 85 °C.

10.3 Power Supply Bypassing

The Vcc and Vcco power supplies should have a high-frequency bypass capacitor, such as 0.1 uF or 0.01 uF, placed very close to each supply pin. 1 uF to 10 uF decoupling capacitors should also be placed nearby the device between the supply and ground planes. All bypass and decoupling capacitors should have short connections to the supply and ground plane through a short trace or via to minimize series inductance.

10.3.1 Power Supply Ripple Rejection

In practical system applications, power supply noise (ripple) can be generated from switching power supplies, digital ASICs or FPGAs, etc. While power supply bypassing will help filter out some of this noise, it is important to understand the effect of power supply ripple on the device performance. When a single-tone sinusoidal signal is applied to the power supply of a clock distribution device, such as LMK00306, it can produce narrow-band phase modulation as well as amplitude modulation on the clock output (carrier). In the single-side band phase noise spectrum, the ripple-induced phase modulation appears as a phase spur level relative to the carrier (measured in dBc).

Copyright © 2012–2016, Texas Instruments Incorporated

Power Supply Bypassing (continued)

For the LMK00306, power supply ripple rejection, or PSRR, was measured as the single-sideband phase spur level (in dBc) modulated onto the clock output when a ripple signal was injected onto the Vcco supply. The PSRR test setup is shown in Figure 39.

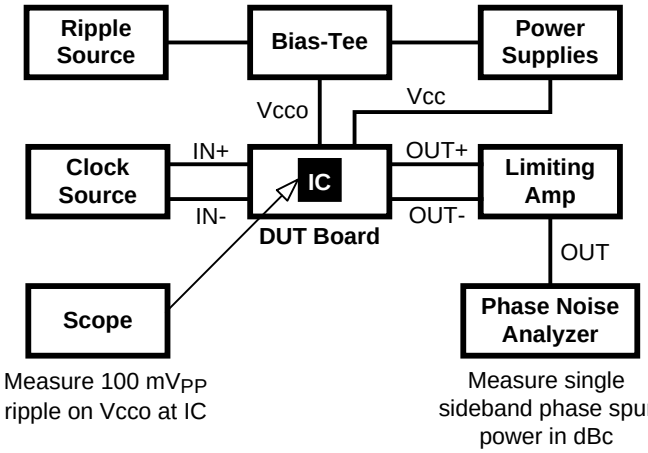

Figure 39. PSRR Test Setup

A signal generator was used to inject a sinusoidal signal onto the Vcco supply of the DUT board, and the peak-to-peak ripple amplitude was measured at the Vcco pins of the device. A limiting amplifier was used to remove amplitude modulation on the differential output clock and convert it to a single-ended signal for the phase noise analyzer. The phase spur level measurements were taken for clock frequencies of 156.25 MHz and 312.5 MHz under the following power supply ripple conditions:

- Ripple amplitude: 100 mVpp on Vcco = 2.5 V
- Ripple frequencies: 100 kHz, 1 MHz, and 10 MHz

Assuming no amplitude modulation effects and small index modulation, the peak-to-peak deterministic jitter (DJ) can be calculated using the measured single-sideband phase spur level (PSRR) as follows:

$$DJ\ (ps\ pk\text{-}pk) = [(2*10^{(PSRR\ /\ 20)}) / (\pi*f_{CLK})] * 10^{12} \quad (12)$$

The “PSRR vs. Ripple Frequency” plots in *Typical Characteristics* show the ripple-induced phase spur levels for the differential output types at 156.25 MHz and 312.5 MHz . The LMK00306 exhibits very good and well-behaved PSRR characteristics across the ripple frequency range for all differential output types. The phase spur levels for LVPECL are below -64 dBc at 156.25 MHz and below -62 dBc at 312.5 MHz. Using Equation 12, these phase spur levels translate to Deterministic Jitter values of 2.57 ps pk-pk at 156.25 MHz and 1.62 ps pk-pk at 312.5 MHz. Testing has shown that the PSRR performance of the device improves for Vcco = 3.3 V under the same ripple amplitude and frequency conditions.

10.4 Thermal Management

Power dissipation in the LMK00306 device can be high enough to require attention to thermal management. For reliability and performance reasons the die temperature should be limited to a maximum of 125 °C. That is, as an estimate, T_A (ambient temperature) plus device power dissipation times $R_{\theta JA}$ should not exceed 125 °C.

The package of the device has an exposed pad that provides the primary heat removal path as well as excellent electrical grounding to the printed circuit board. To maximize the removal of heat from the package a thermal land pattern including multiple vias to a ground plane must be incorporated on the PCB within the footprint of the package. The exposed pad must be soldered down to ensure adequate heat conduction out of the package.

Copyright © 2012–2016, Texas Instruments Incorporated

Thermal Management (continued)

A recommended land and via pattern is shown in Figure 40. More information on soldering WQFN packages can be obtained at: http://www.ti.com/packaging.

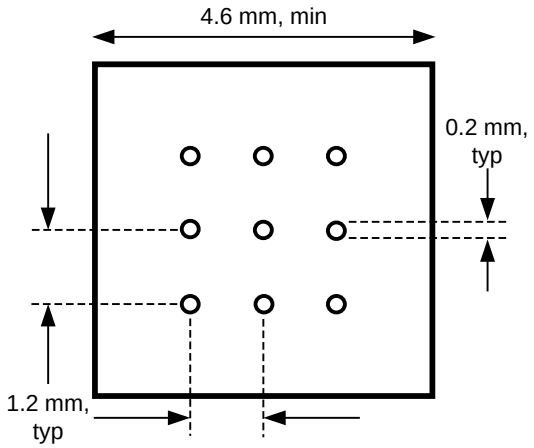

Figure 40. Recommended Land and Via Pattern

To minimize junction temperature it is recommended that a simple heat sink be built into the PCB (if the ground plane layer is not exposed). This is done by including a copper area of about 2 square inches on the opposite side of the PCB from the device. This copper area may be plated or solder coated to prevent corrosion but should not have conformal coating (if possible), which could provide thermal insulation. The vias shown in Figure 40 should connect these top and bottom copper layers and to the ground layer. These vias act as “heat pipes” to carry the thermal energy away from the device side of the board to where it can be more effectively dissipated.

Copyright © 2012–2016, Texas Instruments Incorporated

11 Device and Documentation Support

11.1 Documentation Support

11.1.1 Related Documentation

Common Data Transmission Parameters and their Definitions, Application Note AN-912 (SNLA036)

11.2 Community Resources

The following links connect to TI community resources. Linked contents are provided "AS IS" by the respective contributors. They do not constitute TI specifications and do not necessarily reflect TI's views; see TI's Terms of Use.

TI E2E™ Online Community ***TI's Engineer-to-Engineer (E2E) Community.*** Created to foster collaboration among engineers. At e2e.ti.com, you can ask questions, share knowledge, explore ideas and help solve problems with fellow engineers.

Design Support ***TI's Design Support*** Quickly find helpful E2E forums along with design support tools and contact information for technical support.

11.3 Trademarks

E2E is a trademark of Texas Instruments.
All other trademarks are the property of their respective owners.

11.4 Electrostatic Discharge Caution



These devices have limited built-in ESD protection. The leads should be shorted together or the device placed in conductive foam during storage or handling to prevent electrostatic damage to the MOS gates.

11.5 Glossary

SLYZ022 — *TI Glossary*.

This glossary lists and explains terms, acronyms, and definitions.

12 Mechanical, Packaging, and Orderable Information

The following pages include mechanical, packaging, and orderable information. This information is the most current data available for the designated devices. This data is subject to change without notice and revision of this document. For browser-based versions of this data sheet, refer to the left-hand navigation.

Copyright © 2012–2016, Texas Instruments Incorporated

PACKAGING INFORMATION

Orderable Device	Status (1)	Package Type	Package Drawing	Pins	Package Qty	Eco Plan (2)	Lead/Ball Finish (6)	MSL Peak Temp (3)	Op Temp (°C)	Device Marking (4/5)	Samples
LMK00306SQ/NOPB	ACTIVE	WQFN	NJK	36	1000	Green (RoHS & no Sb/Br)	SN	Level-3-260C-168 HR	-40 to 85	K00306	Samples
LMK00306SQE/NOPB	ACTIVE	WQFN	NJK	36	250	Green (RoHS & no Sb/Br)	SN	Level-3-260C-168 HR	-40 to 85	K00306	Samples
LMK00306SQX/NOPB	ACTIVE	WQFN	NJK	36	2500	Green (RoHS & no Sb/Br)	SN	Level-3-260C-168 HR	-40 to 85	K00306	Samples

(1) The marketing status values are defined as follows:
ACTIVE: Product device recommended for new designs.
LIFEBUY: TI has announced that the device will be discontinued, and a lifetime-buy period is in effect.
NRND: Not recommended for new designs. Device is in production to support existing customers, but TI does not recommend using this part in a new design.
PREVIEW: Device has been announced but is not in production. Samples may or may not be available.
OBSOLETE: TI has discontinued the production of the device.

(2) **RoHS:** TI defines "RoHS" to mean semiconductor products that are compliant with the current EU RoHS requirements for all 10 RoHS substances, including the requirement that RoHS substance do not exceed 0.1% by weight in homogeneous materials. Where designed to be soldered at high temperatures, "RoHS" products are suitable for use in specified lead-free processes. TI may reference these types of products as "Pb-Free".
RoHS Exempt: TI defines "RoHS Exempt" to mean products that contain lead but are compliant with EU RoHS pursuant to a specific EU RoHS exemption.
Green: TI defines "Green" to mean the content of Chlorine (Cl) and Bromine (Br) based flame retardants meet JS709B low halogen requirements of <=1000ppm threshold. Antimony trioxide based flame retardants must also meet the <=1000ppm threshold requirement.

(3) MSL, Peak Temp. - The Moisture Sensitivity Level rating according to the JEDEC industry standard classifications, and peak solder temperature.

(4) There may be additional marking, which relates to the logo, the lot trace code information, or the environmental category on the device.

(5) Multiple Device Markings will be inside parentheses. Only one Device Marking contained in parentheses and separated by a "~" will appear on a device. If a line is indented then it is a continuation of the previous line and the two combined represent the entire Device Marking for that device.

(6) Lead/Ball Finish - Orderable Devices may have multiple material finish options. Finish options are separated by a vertical ruled line. Lead/Ball Finish values may wrap to two lines if the finish value exceeds the maximum column width.

Important Information and Disclaimer: The information provided on this page represents TI's knowledge and belief as of the date that it is provided. TI bases its knowledge and belief on information provided by third parties, and makes no representation or warranty as to the accuracy of such information. Efforts are underway to better integrate information from third parties. TI has taken and continues to take reasonable steps to provide representative and accurate information but may not have conducted destructive testing or chemical analysis on incoming materials and chemicals. TI and TI suppliers consider certain information to be proprietary, and thus CAS numbers and other limited information may not be available for release.

In no event shall TI's liability arising out of such information exceed the total purchase price of the TI part(s) at issue in this document sold by TI to Customer on an annual basis.

TAPE AND REEL INFORMATION

REEL DIMENSIONS

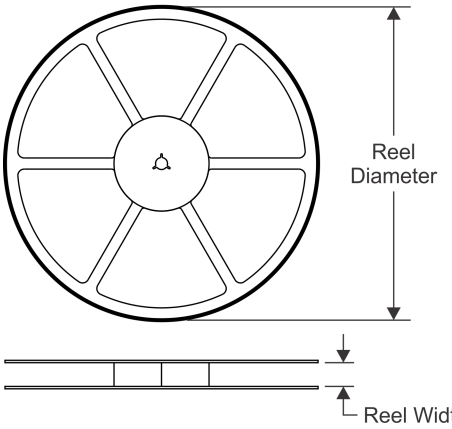

TAPE DIMENSIONS

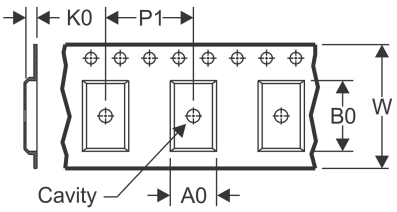

A0	Dimension designed to accommodate the component width
B0	Dimension designed to accommodate the component length
K0	Dimension designed to accommodate the component thickness
W	Overall width of the carrier tape
P1	Pitch between successive cavity centers

QUADRANT ASSIGNMENTS FOR PIN 1 ORIENTATION IN TAPE

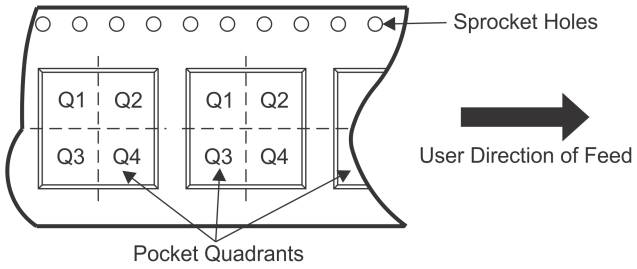

*All dimensions are nominal

Device	Package Type	Package Drawing	Pins	SPQ	Reel Diameter (mm)	Reel Width W1 (mm)	A0 (mm)	B0 (mm)	K0 (mm)	P1 (mm)	W (mm)	Pin1 Quadrant
LMK00306SQ/NOPB	WQFN	NJK	36	1000	330.0	16.4	6.3	6.3	1.5	12.0	16.0	Q1
LMK00306SQE/NOPB	WQFN	NJK	36	250	178.0	16.4	6.3	6.3	1.5	12.0	16.0	Q1
LMK00306SQX/NOPB	WQFN	NJK	36	2500	330.0	16.4	6.3	6.3	1.5	12.0	16.0	Q1

TAPE AND REEL BOX DIMENSIONS

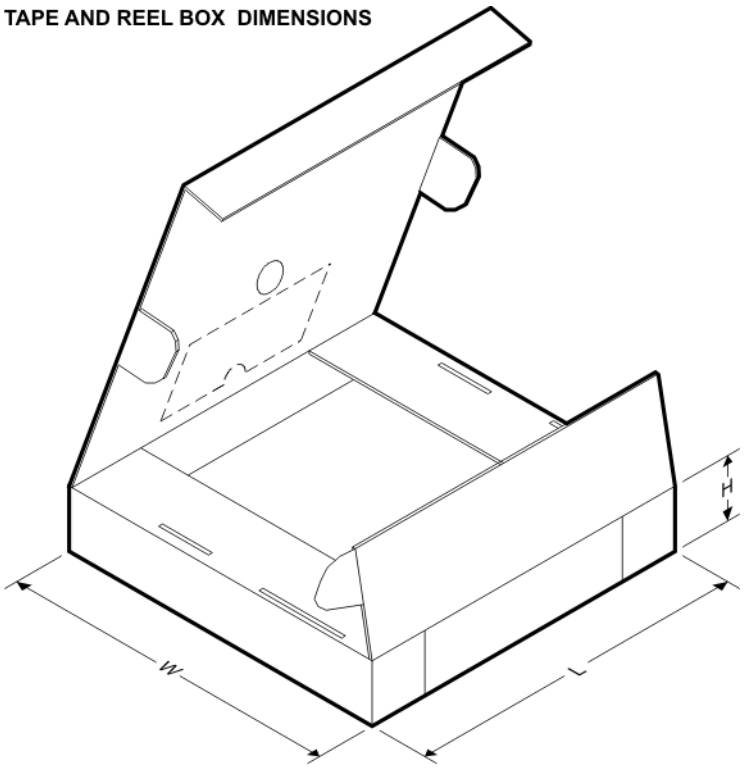

*All dimensions are nominal

Device	Package Type	Package Drawing	Pins	SPQ	Length (mm)	Width (mm)	Height (mm)
LMK00306SQ/NOPB	WQFN	NJK	36	1000	367.0	367.0	38.0
LMK00306SQE/NOPB	WQFN	NJK	36	250	210.0	185.0	35.0
LMK00306SQX/NOPB	WQFN	NJK	36	2500	367.0	367.0	38.0

NJK0036A

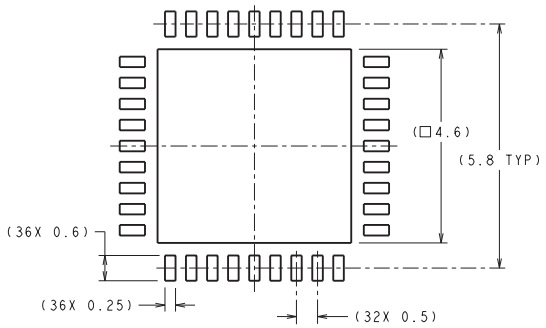

RECOMMENDED LAND PATTERN

DIMENSIONS ARE IN MILLIMETERS
DIMENSIONS IN ( ) FOR REFERENCE ONLY

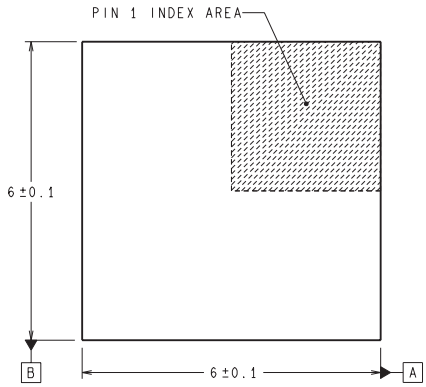

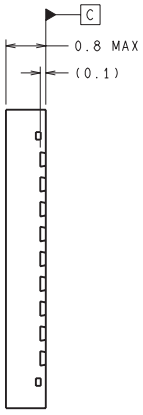

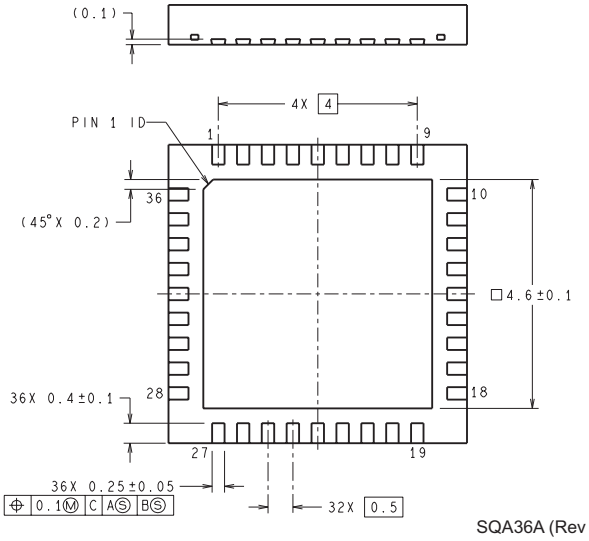

SQA36A (Rev A)

IMPORTANT NOTICE AND DISCLAIMER

TI PROVIDES TECHNICAL AND RELIABILITY DATA (INCLUDING DATASHEETS), DESIGN RESOURCES (INCLUDING REFERENCE DESIGNS), APPLICATION OR OTHER DESIGN ADVICE, WEB TOOLS, SAFETY INFORMATION, AND OTHER RESOURCES “AS IS” AND WITH ALL FAULTS, AND DISCLAIMS ALL WARRANTIES, EXPRESS AND IMPLIED, INCLUDING WITHOUT LIMITATION ANY IMPLIED WARRANTIES OF MERCHANTABILITY, FITNESS FOR A PARTICULAR PURPOSE OR NON-INFRINGEMENT OF THIRD PARTY INTELLECTUAL PROPERTY RIGHTS.

These resources are intended for skilled developers designing with TI products. You are solely responsible for (1) selecting the appropriate TI products for your application, (2) designing, validating and testing your application, and (3) ensuring your application meets applicable standards, and any other safety, security, or other requirements. These resources are subject to change without notice. TI grants you permission to use these resources only for development of an application that uses the TI products described in the resource. Other reproduction and display of these resources is prohibited. No license is granted to any other TI intellectual property right or to any third party intellectual property right. TI disclaims responsibility for, and you will fully indemnify TI and its representatives against, any claims, damages, costs, losses, and liabilities arising out of your use of these resources.

TI’s products are provided subject to TI’s Terms of Sale (www.ti.com/legal/termsofsale.html) or other applicable terms available either on ti.com or provided in conjunction with such TI products. TI’s provision of these resources does not expand or otherwise alter TI’s applicable warranties or warranty disclaimers for TI products.

Mailing Address: Texas Instruments, Post Office Box 655303, Dallas, Texas 75265
Copyright © 2020, Texas Instruments Incorporated