AN-1945 LMH6554LE-EVAL High Speed Differential Amplifier Evaluation Board

1 General Description

The LMH6554LE−EVAL evaluation board is designed to aid in the characterization of Texas Instruments LMH6554 fully differential amplifier in an 14 lead UQFN package. The LMH6554 is part of the LMH™ high-speed amplifier family.

Use the evaluation board as a guide for high frequency layout and as a tool to aid in device testing and characterization.

The evaluation board schematic is shown in Figure 1. For recommended for component values, see the device-specific data sheets.

2 Basic Operation

The LMH6554LE−EVAL evaluation board has been set up to provide maximum flexibility for evaluating TI's differential LMH6554 operational amplifier. The board supports fully differential operation as well as single-ended to differential and single-ended to single-ended operation. For fully differential operation, use resistors R_2 and R_3 to set the input impedance of the amplifier. The differential input resistance will be equal to $2*R_2 \parallel 2*R_{G_M}$. Where $R_2 = R_3$ and $R_{G_M} = R_{G_P}$. In this mode resistors R_{G_M}, R_{G_F}, R_{F_M} and R_{F_P} set the gain of the amplifier. Amplifier gain = $R_{F_M}/R_{G_M} = R_{F_P}/R_{G_P}$ where $R_{G_M} = R_{G_P}$ and $R_{F_M} = R_{F_P}$. For more details on gain component value selections, see Table 2. For single-ended input mode of operation, the input and termination resistance must be properly configured to give the correct gain and input impedance (R_{IN}). For example, in the case of the LMH6554, if a gain of 2 V/V is desired, $R_2 = R_3 = 76.8\ \Omega$, $R_{G_M} = R_{G_P} = 90\ \Omega$, $R_{F_M} = R_{F_P} = 200\ \Omega$, C_2 and R_{14} = OPEN, $C_3 = 0.1\ \mu F$, and $R_{15} = 50\ \Omega$, which will make $R_{IN} = 50\ \Omega$ at the most positive node of R_3 looking into R_{G_M}. Further details of single-ended input mode calculations can be found in the *LMH6554 2.8 GHz Ultra Linear Fully Differential Amplifier Data Sheet* (SNOSB30). Components $C_3 = 0.1\ \mu F$ and $R_{15} = 50\ \Omega$ should be used to AC-couple and balance the inputs, otherwise can be left empty. In this example the input signal would be connected to the VIN- input. For more details on gain component value selections, see Table 1.

For differential output applications, load R_6 and R_7 with the desired values to match the output load and leave C_{14} and C_{15} empty. Typically to match a test equipment, $R_6 = R_7 = 50\ \Omega$.

If single-ended output is desired an output transformer such as the TC4-19 from mini circuits can be utilized. The TC4-19 has a 4:1 impedance ratio (2:1 turns/voltage ratio). This is particularly useful for interfacing to a 50 Ω test equipment. When referencing the transformer data sheet, the LMH6554LE−EVAL evaluation board has the primary windings on the output side of the evaluation board and the amplifier is driving the secondary windings. This provides a step down transformation from the differential amplifier output to the test equipment. The center-tapped secondary winding also allows a differential to single ended conversion (Balun). The impedance seen by the differential amplifier = ($R_6 + R_7 + R_L*4$), where R_L is the impedance from pin 4 of the transformer to the load. For example, if $R_L = 50\ \Omega$ for the test equipment, to achieve an impedance of 500 Ω seen by the LMH6554 differential output $R_6 = R_7 = 150\ \Omega$ with $C_{14} = C_{15} = R_{12} = R_{13} = 0\ \Omega$. The LMH6554LE−EVAL board is equipped with pads to add additional filtering schemes using C_{14} - C_{18} and R_8 - R_{13}.

LMH, LMH6554LE−EVAL are trademarks of Texas Instruments.
All other trademarks are the property of their respective owners.

Copyright © 2009–2013, Texas Instruments Incorporated

Pin 9 on the LMH6554 device is the enable (VEN) pin that can be used to disable the device with an external signal. Pin 11 and 14 have no internal package connections and should be connected to analog ground by using 0 Ω resistors for R_4 and R_5. For more details, see the *LMH6554 2.8 GHz Ultra Linear Fully Differential Amplifier Data Sheet* (SNOSB30).

3 Layout Considerations

The printed circuit board (PCB) layout and supply bypassing play major roles in determining high frequency performance. Use these evaluation boards as a guide when designing your own board and follow these steps to optimize high frequency performance:

1. Symmetry is of the utmost importance.
2. Use precision resistors 0.1% or 0.01%.
3. Use a ground plane.
4. Include large (~ 10 µF) ceramic capacitors on both supplies (C_{19} and C_{20}).
5. Near the device use ceramic capacitors 0.1 µF for $C_{22–25}$ and 0.01 µF for C_7, C_8, C_{12}, and C_{13} from supplies to ground.
6. Remove the ground and power planes from under and around the part, especially the input and output pins.
7. Minimize all trace lengths.
8. Use terminated and matched transmission lines for long traces.

Sample artwork for the LMH6554LE−EVAL evaluation board is shown in Figure 2 and Figure 3.

4 Measurement Hints

Balance, CMRR and HD2 are highly dependent on resistor matching. Use 0.1 or 0.01% resistors.

The LMH6554LE−EVAL™ evaluation board is designed for differential or single-ended output measurements, but not both at the same time. When not using the transformer make sure to leave C_{14} and C_{15} empty. Likewise, when making single-ended output measurements populate components C_{14}, C_{15}, R_{12} and R_{13}.

Many differential amplifiers are optimized for the higher impedances represented by most ADCs.

On a differential amplifier both inputs are inverting, keep parasitic capacitance to a minimum on both inputs. Also, using probes of any kind on a differential circuit is not recommended.

Copyright © 2009–2013, Texas Instruments Incorporated

5 LMH6554LE_EVAL Schematic

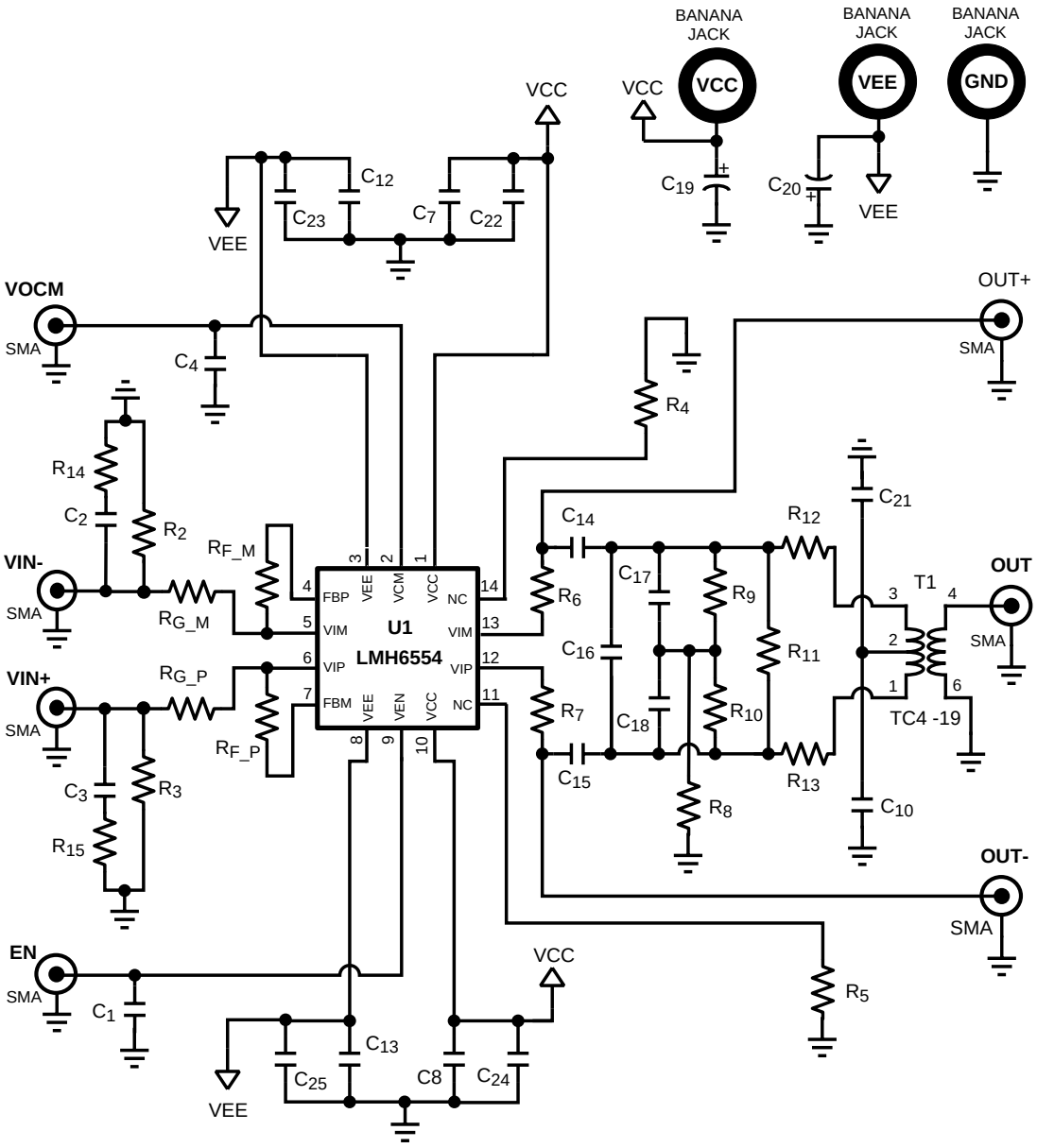

Figure 1. Board Schematic

Table 1. Single-Ended Input Gain Resistor Values for 50 Ω System

Gain	$R_{F_M} = R_{F_P}$	$R_{G_M}=R_{G_P}$	R3	R_M	R6 = R7
0dB	200 Ω	191 Ω	62 Ω	27.7 Ω	50 Ω
6dB	200 Ω	91 Ω	76.8 Ω	30.3 Ω	50 Ω
12dB	200 Ω	35.7 Ω	147 Ω	37.3 Ω	50 Ω

Copyright © 2009–2013, Texas Instruments Incorporated

Table 2. Differential Input Gain Resistor Selection for 50 Ω System

Gain	$R_{F_M} = R_{F_P}$	$R_{G_M} = R_{G_P}$	R2 = R3	R6 = R7
0dB	200 Ω	200 Ω	66.67 Ω	50 Ω
6dB	200 Ω	100 Ω	100 Ω	50 Ω
12dB	200 Ω	50 Ω	—	50 Ω

6 LMH6554LE_EVAL Board Layout Views

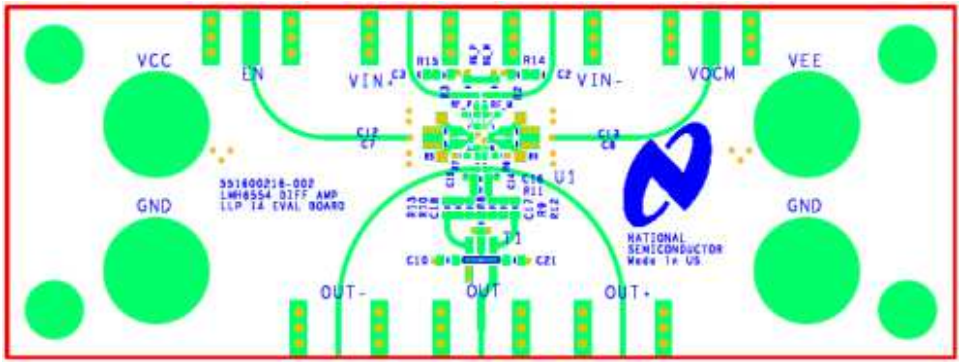

Figure 2. Board Layout Top View

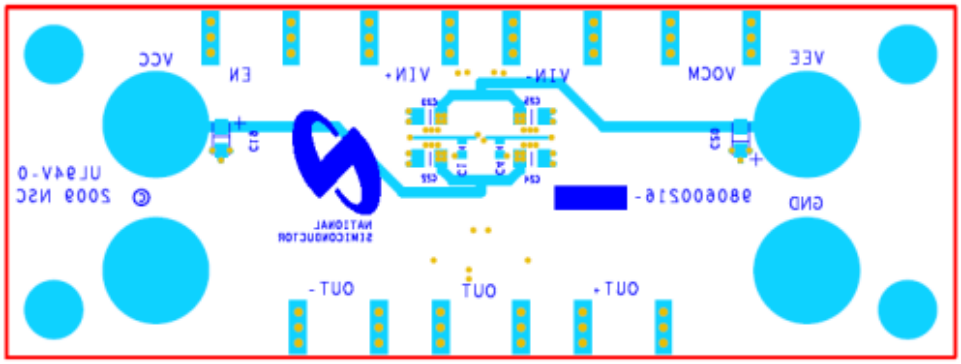

Figure 3. Board Layout Bottom View

Copyright © 2009–2013, Texas Instruments Incorporated

7 Bill of Materials (BOM)

Table 3. LMH6554LE_EVAL BOM

Item No	P/N	Manufacturer	Qty	Reference	Description
1	GRM188F51C224ZA01D	Murata	2	C1,C4	Ceramic cap 0.22 µF 16 V 0603
2	C1608X8R1H103K	TDK Corporation	4	C7,C8,C12,C13	Ceramic cap 0.01 µF 50 V 10% 0603
3	C3216X5R1C106M	TDK Corporation	2	C19,C10	Ceramic cap 10 µF 16 V 20% 1206
4	C0603C104K4RACTU	Kemet	1	C2	Ceramic cap 0.1uF 16 V X7R 0603
5	CC0805KRX7R7BB104	Yageo	4	C22–C25	Ceramic cap 0.1uF 16 V X7R 0805
6	142–0701–806	Emerson (Johnson)	7	EN,OUT,OUT+, OUT-,VIN+, VIN-, VOCM	Connector Jack rcpt end launch nickel
7	SPC15363	SPC TECHNOLOGY	1	VCC	RED insulated banana jack
8	SPC15182	SPC TECHNOLOGY	1	VEE	GREEN insulated banana jack
9	SPC15354	SPC TECHNOLOGY	1	GND	BLACK insulated banana jack
10	RC0603FR-0749R9L	Yageo	1	R14	Resistor 49.9 Ω 1/10W 1% 0603 SMD
11	RC0603FR-0776R8L	Yageo	2	R2,R3	Resistor 76.8 Ω 1/10W 1% 0603 SMD
12	RC0402JR-070RL	Yageo	2	R4,R5	Resistor 0 Ω 1/6W 5% 0402 SMD
13	TNPW040249R9BEED	Vishay/Dale	2	R6,R7	Resistor 49.9 Ω 1/16W 0.1% 0402
14	ERA-2AEB201X	Panasonic	2	RF_M,RF_P	Resistor 200 Ω 1/16W 0.1% 0402 SMD
15	ERA-2AEB910X	Panasonic	2	RG_M,RG_P	Resistor 91 Ω 1/16W 0.1% 0402 SMD
16	TC4–19+	Mini-Circuits	1	T1	Surface Mount RF transformer, 50 Ω, 10 to 1900 MHz
17	LMH6554	Texas Instruments	1	U1	2.5 GHz Fully Differential Amplifier, 14 pin UQFN package

Copyright © 2009–2013, Texas Instruments Incorporated

IMPORTANT NOTICE

Texas Instruments Incorporated and its subsidiaries (TI) reserve the right to make corrections, enhancements, improvements and other changes to its semiconductor products and services per JESD46, latest issue, and to discontinue any product or service per JESD48, latest issue. Buyers should obtain the latest relevant information before placing orders and should verify that such information is current and complete. All semiconductor products (also referred to herein as “components”) are sold subject to TI’s terms and conditions of sale supplied at the time of order acknowledgment.

TI warrants performance of its components to the specifications applicable at the time of sale, in accordance with the warranty in TI’s terms and conditions of sale of semiconductor products. Testing and other quality control techniques are used to the extent TI deems necessary to support this warranty. Except where mandated by applicable law, testing of all parameters of each component is not necessarily performed.

TI assumes no liability for applications assistance or the design of Buyers’ products. Buyers are responsible for their products and applications using TI components. To minimize the risks associated with Buyers’ products and applications, Buyers should provide adequate design and operating safeguards.

TI does not warrant or represent that any license, either express or implied, is granted under any patent right, copyright, mask work right, or other intellectual property right relating to any combination, machine, or process in which TI components or services are used. Information published by TI regarding third-party products or services does not constitute a license to use such products or services or a warranty or endorsement thereof. Use of such information may require a license from a third party under the patents or other intellectual property of the third party, or a license from TI under the patents or other intellectual property of TI.

Reproduction of significant portions of TI information in TI data books or data sheets is permissible only if reproduction is without alteration and is accompanied by all associated warranties, conditions, limitations, and notices. TI is not responsible or liable for such altered documentation. Information of third parties may be subject to additional restrictions.

Resale of TI components or services with statements different from or beyond the parameters stated by TI for that component or service voids all express and any implied warranties for the associated TI component or service and is an unfair and deceptive business practice. TI is not responsible or liable for any such statements.

Buyer acknowledges and agrees that it is solely responsible for compliance with all legal, regulatory and safety-related requirements concerning its products, and any use of TI components in its applications, notwithstanding any applications-related information or support that may be provided by TI. Buyer represents and agrees that it has all the necessary expertise to create and implement safeguards which anticipate dangerous consequences of failures, monitor failures and their consequences, lessen the likelihood of failures that might cause harm and take appropriate remedial actions. Buyer will fully indemnify TI and its representatives against any damages arising out of the use of any TI components in safety-critical applications.

In some cases, TI components may be promoted specifically to facilitate safety-related applications. With such components, TI’s goal is to help enable customers to design and create their own end-product solutions that meet applicable functional safety standards and requirements. Nonetheless, such components are subject to these terms.

No TI components are authorized for use in FDA Class III (or similar life-critical medical equipment) unless authorized officers of the parties have executed a special agreement specifically governing such use.

Only those TI components which TI has specifically designated as military grade or “enhanced plastic” are designed and intended for use in military/aerospace applications or environments. Buyer acknowledges and agrees that any military or aerospace use of TI components which have ***not*** been so designated is solely at the Buyer's risk, and that Buyer is solely responsible for compliance with all legal and regulatory requirements in connection with such use.

TI has specifically designated certain components as meeting ISO/TS16949 requirements, mainly for automotive use. In any case of use of non-designated products, TI will not be responsible for any failure to meet ISO/TS16949.

Products		**Applications**	
Audio	www.ti.com/audio	Automotive and Transportation	www.ti.com/automotive
Amplifiers	amplifier.ti.com	Communications and Telecom	www.ti.com/communications
Data Converters	dataconverter.ti.com	Computers and Peripherals	www.ti.com/computers
DLP® Products	www.dlp.com	Consumer Electronics	www.ti.com/consumer-apps
DSP	dsp.ti.com	Energy and Lighting	www.ti.com/energy
Clocks and Timers	www.ti.com/clocks	Industrial	www.ti.com/industrial
Interface	interface.ti.com	Medical	www.ti.com/medical
Logic	logic.ti.com	Security	www.ti.com/security
Power Mgmt	power.ti.com	Space, Avionics and Defense	www.ti.com/space-avionics-defense
Microcontrollers	microcontroller.ti.com	Video and Imaging	www.ti.com/video
RFID	www.ti-rfid.com		
OMAP Applications Processors	www.ti.com/omap	**TI E2E Community**	e2e.ti.com
Wireless Connectivity	www.ti.com/wirelessconnectivity		

Mailing Address: Texas Instruments, Post Office Box 655303, Dallas, Texas 75265
Copyright © 2013, Texas Instruments Incorporated