AN-1836 LMH1251 Evaluation Board v2.0

1 Introduction

The LMH1251 evaluation board is designed for bench evaluation and characterization of the LMH1251 device.

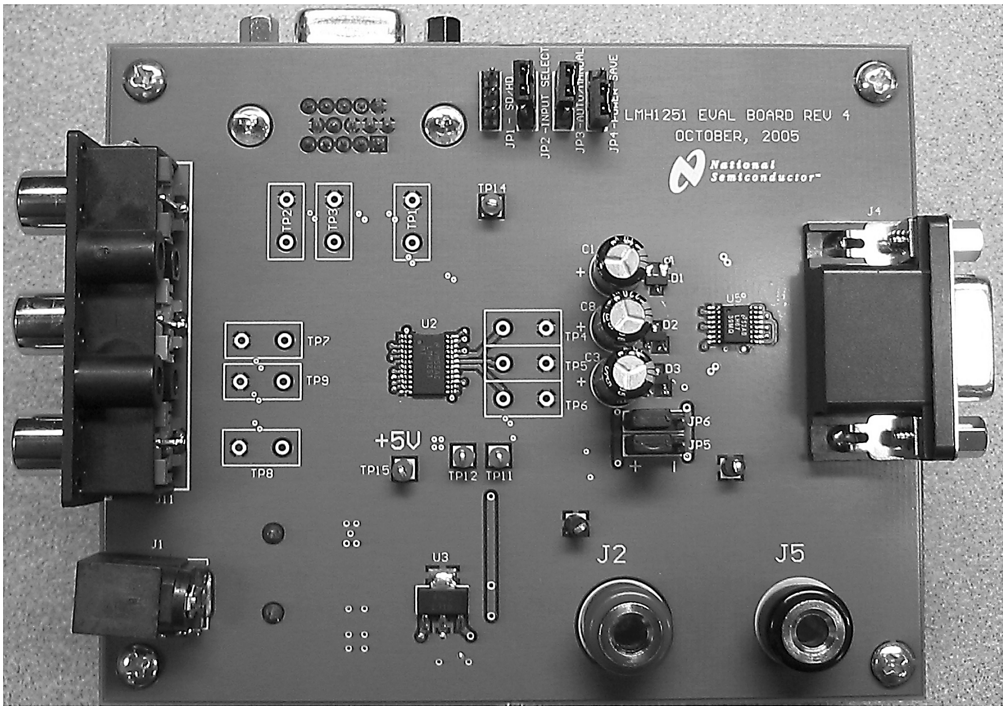

- A VGA 15-pin D-sub PC video connector and YP_BP_R RCA component Video connector are installed on the board for video source inputs 1 and 2, respectively.
- JP1, JP2, JP3, and JP4 are used to set the logic selection pins 21 through 24, by installing the jumpers in the appropriate configuration.

Since the LMH1251 is not intended to directly drive a video cable, a LMH6739 op amp with a gain of 2 is included on the board so that the output of the LMH1251 can be displayed on a monitor for visual inspection. Logic inverters are also included at the outputs of the H and V Sync outputs to provide output drive for the signals over the VGA cable. Typically, the LMH1251 is designed into a system board with extremely minimal trace length, AC coupled to the next stage, which can be either an ADC (TFT LCD monitor), or a preamplifier (CRT monitor).

The LMH1251 evaluation board has test point pads right at the RGB, H and V sync outputs of the LMH1251 for oscilloscope probing (TP4, TP5, TP6, TP11, and TP12). Minimal length test leads can be soldered on these pads for probing with a low capacitance (<1 pF) FET probe such as the Tektronix P6245 for AC transient response measurements. DC level measurements can be taken with a passive probe such as the Tektronix P5050, 10 MΩ probe.

All trademarks are the property of their respective owners.

Copyright © 2008–2013, Texas Instruments Incorporated

2 Board Electrical Specifications

Power Requirements:

V_{CC} = +6.0 ±0.1 V, (at least 300 mA)

Analog Video Input:

0.7 V_{PP} RGB or YP_BP_R (1.0 V_{PP} including sync.)

- PROGRESSIVE SCAN DVD Players
- 480i, 480p, 576i, 576p, 720p, 1080i, 1080p/60 video sources
- VGA - UXGA VESA video sources

3 Jumper Instructions

JP1:— SD/HD Selection. (This should be left un-jumpered, when in Auto Mode, which is typically recommended.)

JP2:— Input Source Select

JP3:— Auto/Manual Mode Select

JP4:— Power Save Mode

JP5:— Horizontal Sync Output Polarity

JP6:— Vertical Sync Output Polarity

- Power save mode is enabled when “HIGH” and disabled when “LOW”
- Auto mode is selected when JP3 is “HIGH”, and manual mode is selected when JP3 is “LOW”
- Input source 1 (PC/VGA) is selected when JP2 is “LOW”, and input source 2 (YP_BP_R) is selected when JP2 is “HIGH”
- IF manual mode is selected, SD (480p) corresponds to JP1 being “LOW” and HD (720p and 1080i) corresponds to being “HIGH.” IF auto mode is selected, JP1 must be left un-jumpered, and TP14 will measure “LOW” or “HIGH” depending on whether the input is SD or HD, respectively.

Copyright © 2008–2013, Texas Instruments Incorporated

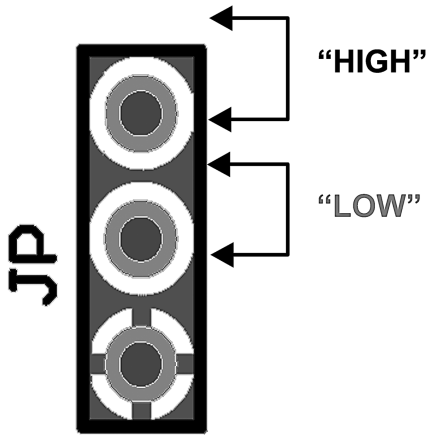

4 PCB Layout (Top and Bottom)

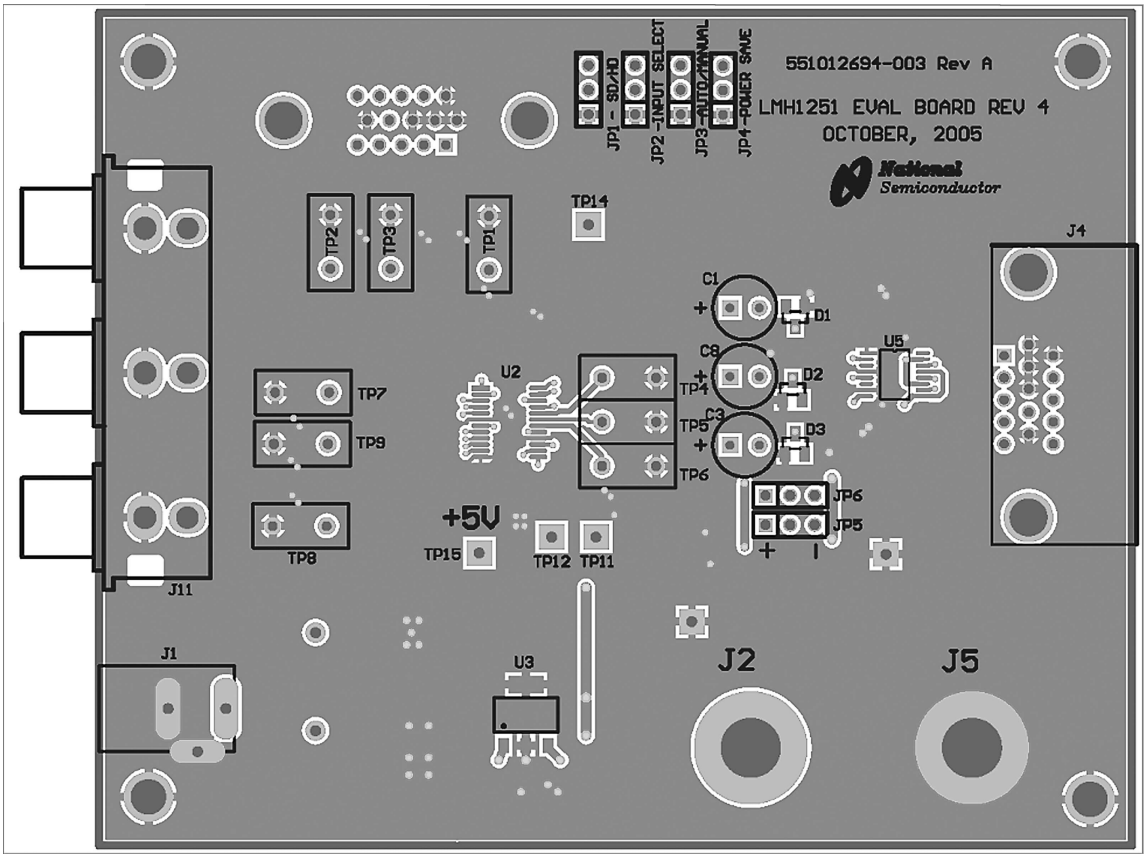

Copyright © 2008–2013, Texas Instruments Incorporated

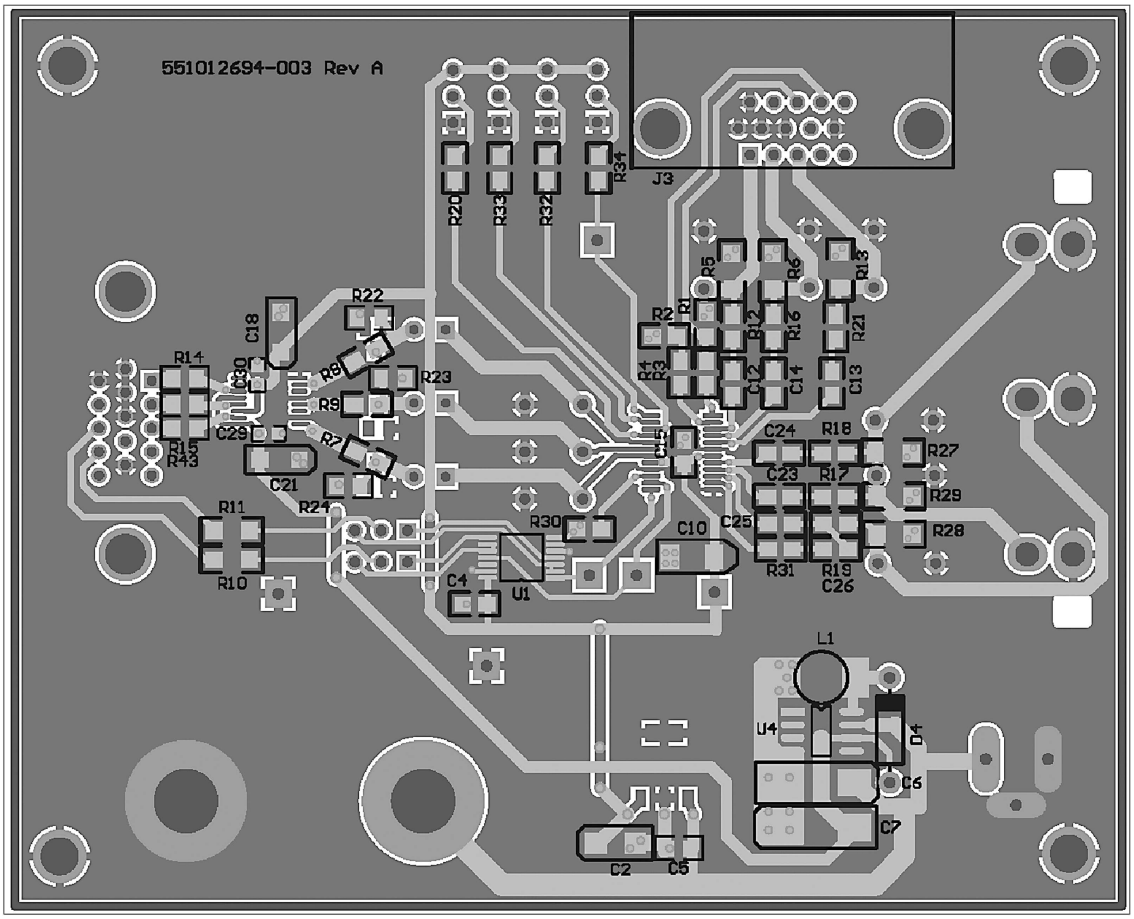

Copyright © 2008–2013, Texas Instruments Incorporated

5 Evaluation Board Schematic

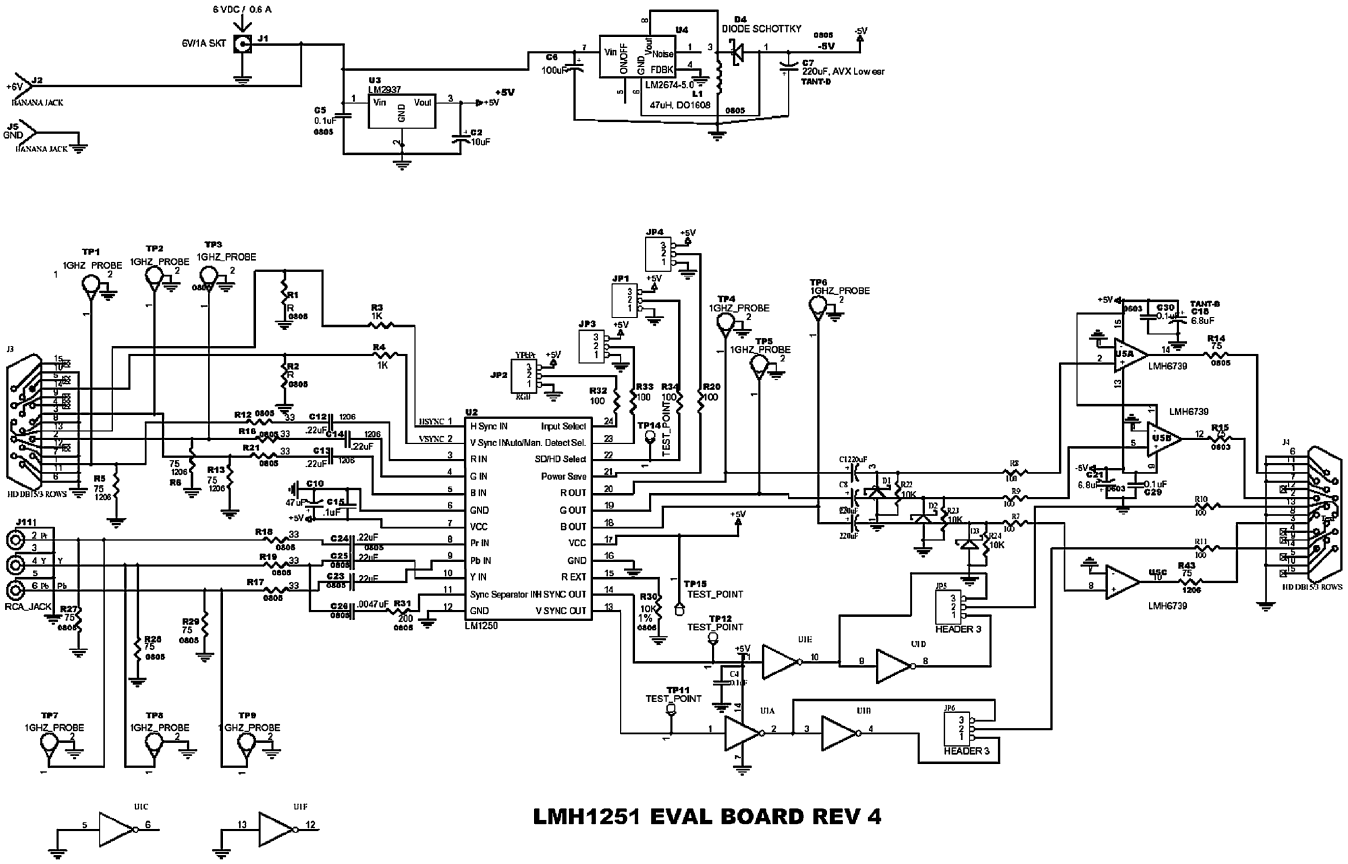

Copyright © 2008–2013, Texas Instruments Incorporated

6 Bill of Materials (BOM)

Table 1. Bill of Materials

Used	Part Type	Designator	Footprint
1	+6V	J2	BANANA
1	.1 µF	C15	0805
6	.22 µF	C12, C13, C14, C23, C24, C25	0805
1	.0047 µF	C26	0805
2	0.1 µF	C29, C30	0603
2	0.1 µF	C4, C5	0805
8	1 GHZ PROBE	TP1, TP2, TP3, TP4, TP5, TP6, TP7, TP8	1 GHZ JACKX
1	1 GHZ PROBE	TP9	1 GHZ JACKX
2	1K	R3, R4	0805
2	6.8 µF	C18, C21	TANT-A
1	6V/1A SKT	J1	POWER
1	10K	R30, R22, R23, R24	0805
1	10 µF	C2	TANT-B
6	33	R12, R16, R17, R18, R19, R21	0805
1	47 µF	C10	TANT-B
1	47 µH, DO1608	L1	DO1608
3	75	R14, R15, R43	0805
6	75	R5, R6, R13, R27, R28, R29	1206
7	100	R7, R8, R9, R20, R32, R33, R34	0805
2	100	R10, R11	1206
1	100 µF	C6	TANT-D
1	200	R31	0805
1	220 µF, AVX Low esr	C7	TANT-D
3	220 µF	C1, C3, C8	RCAP100
3	DIODE SCHOTTKY	D1, D2, D3	SOT-23 BAT54
1	DIODE SCHOTTKY	D4	DIODE 0.4
1	GND	J5	BANANA
2	HD DB15/3 ROWS	J3, J4	SUBMIN-15
2	HEADER 3	JP5, JP6	SIP3
1	LM1250	U2	24P TSSOP
1	LM2674	U4	SSOP8
1	LM2937	U3	SOT-223
1	LMH6739	U5	SSOP16
2	R	R1, R2	0805
1	RCA JACK	J11	RCA TRIPLE
1	SN74AHC04	U1	TSSOP14
4	TEST POINT	TP11, TP12	TEST POINT

Copyright © 2008–2013, Texas Instruments Incorporated

IMPORTANT NOTICE

Texas Instruments Incorporated and its subsidiaries (TI) reserve the right to make corrections, enhancements, improvements and other changes to its semiconductor products and services per JESD46, latest issue, and to discontinue any product or service per JESD48, latest issue. Buyers should obtain the latest relevant information before placing orders and should verify that such information is current and complete. All semiconductor products (also referred to herein as “components”) are sold subject to TI’s terms and conditions of sale supplied at the time of order acknowledgment.

TI warrants performance of its components to the specifications applicable at the time of sale, in accordance with the warranty in TI’s terms and conditions of sale of semiconductor products. Testing and other quality control techniques are used to the extent TI deems necessary to support this warranty. Except where mandated by applicable law, testing of all parameters of each component is not necessarily performed.

TI assumes no liability for applications assistance or the design of Buyers’ products. Buyers are responsible for their products and applications using TI components. To minimize the risks associated with Buyers’ products and applications, Buyers should provide adequate design and operating safeguards.

TI does not warrant or represent that any license, either express or implied, is granted under any patent right, copyright, mask work right, or other intellectual property right relating to any combination, machine, or process in which TI components or services are used. Information published by TI regarding third-party products or services does not constitute a license to use such products or services or a warranty or endorsement thereof. Use of such information may require a license from a third party under the patents or other intellectual property of the third party, or a license from TI under the patents or other intellectual property of TI.

Reproduction of significant portions of TI information in TI data books or data sheets is permissible only if reproduction is without alteration and is accompanied by all associated warranties, conditions, limitations, and notices. TI is not responsible or liable for such altered documentation. Information of third parties may be subject to additional restrictions.

Resale of TI components or services with statements different from or beyond the parameters stated by TI for that component or service voids all express and any implied warranties for the associated TI component or service and is an unfair and deceptive business practice. TI is not responsible or liable for any such statements.

Buyer acknowledges and agrees that it is solely responsible for compliance with all legal, regulatory and safety-related requirements concerning its products, and any use of TI components in its applications, notwithstanding any applications-related information or support that may be provided by TI. Buyer represents and agrees that it has all the necessary expertise to create and implement safeguards which anticipate dangerous consequences of failures, monitor failures and their consequences, lessen the likelihood of failures that might cause harm and take appropriate remedial actions. Buyer will fully indemnify TI and its representatives against any damages arising out of the use of any TI components in safety-critical applications.

In some cases, TI components may be promoted specifically to facilitate safety-related applications. With such components, TI’s goal is to help enable customers to design and create their own end-product solutions that meet applicable functional safety standards and requirements. Nonetheless, such components are subject to these terms.

No TI components are authorized for use in FDA Class III (or similar life-critical medical equipment) unless authorized officers of the parties have executed a special agreement specifically governing such use.

Only those TI components which TI has specifically designated as military grade or “enhanced plastic” are designed and intended for use in military/aerospace applications or environments. Buyer acknowledges and agrees that any military or aerospace use of TI components which have ***not*** been so designated is solely at the Buyer's risk, and that Buyer is solely responsible for compliance with all legal and regulatory requirements in connection with such use.

TI has specifically designated certain components as meeting ISO/TS16949 requirements, mainly for automotive use. In any case of use of non-designated products, TI will not be responsible for any failure to meet ISO/TS16949.

Products		**Applications**	
Audio	www.ti.com/audio	Automotive and Transportation	www.ti.com/automotive
Amplifiers	amplifier.ti.com	Communications and Telecom	www.ti.com/communications
Data Converters	dataconverter.ti.com	Computers and Peripherals	www.ti.com/computers
DLP® Products	www.dlp.com	Consumer Electronics	www.ti.com/consumer-apps
DSP	dsp.ti.com	Energy and Lighting	www.ti.com/energy
Clocks and Timers	www.ti.com/clocks	Industrial	www.ti.com/industrial
Interface	interface.ti.com	Medical	www.ti.com/medical
Logic	logic.ti.com	Security	www.ti.com/security
Power Mgmt	power.ti.com	Space, Avionics and Defense	www.ti.com/space-avionics-defense
Microcontrollers	microcontroller.ti.com	Video and Imaging	www.ti.com/video
RFID	www.ti-rfid.com		
OMAP Applications Processors	www.ti.com/omap	**TI E2E Community**	e2e.ti.com
Wireless Connectivity	www.ti.com/wirelessconnectivity		

Mailing Address: Texas Instruments, Post Office Box 655303, Dallas, Texas 75265
Copyright © 2013, Texas Instruments Incorporated