National Semiconductor

July 15, 2009

LMH0044

SMPTE 292M / 259M Adaptive Cable Equalizer

General Description

The LMH0044 SMPTE 292M / 259M adaptive cable equalizer is a monolithic integrated circuit for equalizing data transmitted over cable (or any media with similar dispersive loss characteristics). The equalizer operates over a wide range of data rates from 125 Mbps to 1.485 Gbps and supports SMPTE 292M, SMPTE 344M and SMPTE 259M.

The LMH0044 implements DC restoration to correctly handle pathological data conditions (DC restoration may be bypassed for low data rate applications). The equalizer may be driven in either a single ended or differential configuration.

Additional features include separate carrier detect and output mute pins which may be tied together to mute the output when no signal is present. A programmable mute reference is provided to mute the output at a selectable level of signal degradation.

Features

- SMPTE 292M, SMPTE 344M and SMPTE 259M compliant
- Supports DVB-ASI at 270 Mbps
- Data rates: 125 Mbps to 1.485 Gbps
- Equalizes up to 200 meters of Belden 1694A at 1.485 Gbps or up to 400 meters of Belden 1694A at 270 Mbps
- Manual bypass and output mute with a programmable threshold
- Single-ended or differential input
- 50Ω differential outputs
- Single 3.3V supply operation
- 208 mW typical power consumption with 3.3V supply
- Replaces the GS1574 and GS1574A

Applications

- SMPTE 292M, SMPTE 344M, and SMPTE 259M serial digital interfaces
- Serial digital data equalization and reception
- Data recovery equalization

Typical Application

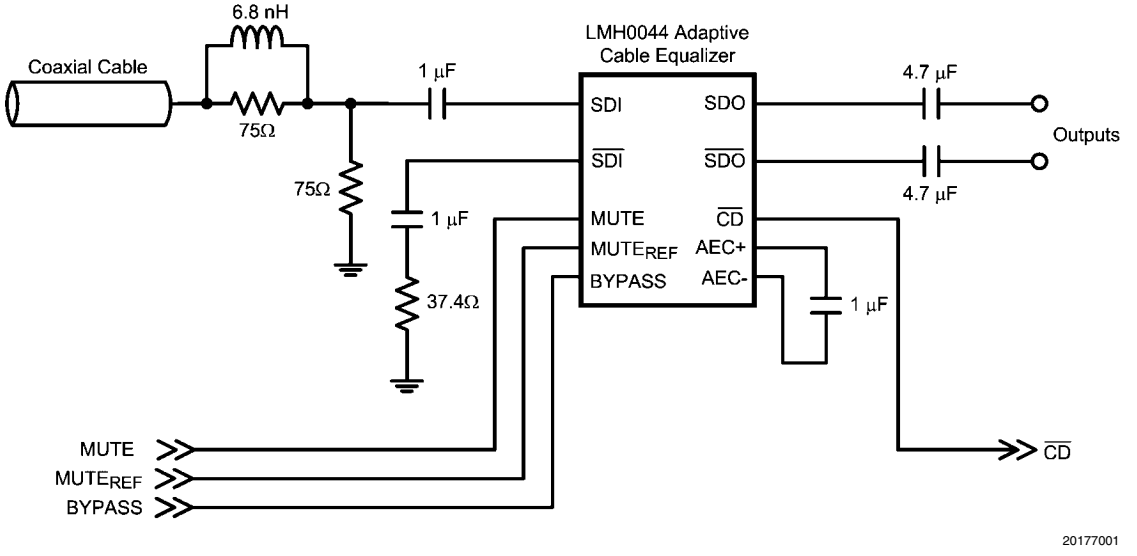

Absolute Maximum Ratings (Note 1)

Supply Voltage	−0.5V to 3.6V
Input Voltage (all inputs)	−0.3V to V_{CC}+0.3V
Storage Temperature Range	−65°C to +150°C
Junction Temperature	+150°C
Lead Temperature (Soldering 4 Sec)	+260°C
Package Thermal Resistance	
θ_{JA} 16-pin LLP	+43°C/W
θ_{JC} 16-pin LLP	+9°C/W
ESD Rating (HBM)	8kV
ESD Rating (MM)	250V

Recommended Operating Conditions

Supply Voltage (V_{CC} – V_{EE})	3.3V ±5%
Input Coupling Capacitance	1.0 µF
AEC Capacitor (Connected between AEC+ and AEC-)	1.0 µF
Operating Free Air Temperature (T_A)	0°C to +85°C

DC Electrical Characteristics

Over Supply Voltage and Operating Temperature ranges, unless otherwise specified (Notes 2, 3).

Symbol	Parameter	Conditions	Reference	Min	Typ	Max	Units
V_{CMIN}	Input Common Mode Voltage		SDI, $\overline{SDI}$		1.9		V
V_{SDI}	Input Voltage Swing	At LMH0044 input, (Notes 4, 6)		720	800	950	mV_{P-P}
V_{CMOUT}	Output Common Mode Voltage		SDO, $\overline{SDO}$		V_{CC} – V_{SDO}/2		V
V_{SDO}	Output Voltage Swing	50Ω load, differential			750		mV_{P-P}
	$MUTE_{REF}$ DC Voltage (floating)		$MUTE_{REF}$		1.3		V
	$MUTE_{REF}$ Range				0.7		V
	$\overline{CD}$ Output Voltage	Carrier not present	$\overline{CD}$	2.6			V
		Carrier present				0.4	V
	MUTE Input Voltage	Min to mute outputs	MUTE	3.0			V
		Max to force outputs active				0.8	V
I_{CC}	Supply Current	(Note 7)			63	77	mA

AC Electrical Characteristics

Over Supply Voltage and Operating Temperature ranges, unless otherwise specified (Note 3).

Symbol	Parameter	Conditions	Reference	Min	Typ	Max	Units
BR_{MIN}	Minimum Input Data Rate		SDI, $\overline{SDI}$		125		Mbps
BR_{MAX}	Maximum Input Data Rate					1485	Mbps
	Jitter for various Cable Lengths (with equalizer pathological)	270 Mbps, Belden 1694A, 400 meters (Note 4)			0.2		UI
		270 Mbps, Belden 8281, 280 meters (Note 4)			0.2		UI
		1.485 Gbps, Belden 1694A, 140 meters (Note 4)			0.25		UI
		1.485 Gbps, Belden 8281, 100 meters (Note 4)			0.25		UI
		1.485 Gbps, Belden 1694A, 200 meters (Note 4)			0.3		UI
t_r,t_f	Output Rise Time, Fall Time	20% – 80%, (Note 4)	SDO, $\overline{SDO}$		100	220	ps
	Mismatch in Rise/Fall Time	(Note 4)			2	15	ps
t_{OS}	Output Overshoot	(Note 4)			1	5	%
R_{OUT}	Output Resistance	single-ended, (Note 5)			50		Ω
RL_{IN}	Input Return Loss	(Note 8)	SDI, $\overline{SDI}$	15	18-20		dB
R_{IN}	Input Resistance	single-ended			1.3		kΩ
C_{IN}	Input Capacitance	single-ended, (Note 5)			1		pF

Note 1: "Absolute Maximum Ratings" are those parameter values beyond which the life and operation of the device cannot be guaranteed. The stating herein of these maximums shall not be construed to imply that the device can or should be operated at or beyond these values. The table of "Electrical Characteristics" specifies acceptable device operating conditions.

Note 2: Current flow into device pins is defined as positive. Current flow out of device pins is defined as negative. All voltages are stated referenced to V_{EE} = 0 Volts.

Note 3: Typical values are stated for V_{CC} = +3.3V and T_A = +25°C.

Note 4: Specification is guaranteed by characterization.

Note 5: Specification is guaranteed by design.

Note 6: The maximum input voltage swing assumes a nonstressing, DC-balance signal; specifically, the SMPTE-recommended color bar test signal. Pathological or other stressing signals may not be used. This specification is for 0m cable only.

Note 7: Supply current depends on the amount of cable being equalized. The current is highest for short cable and decreases as the cable length is increased. Refer to *Figures 1*, *2*.

Note 8: Input return loss is dependent on board design. The LMH0044 meets this specification on the SD044 evaluation board from 5 MHz to 1.5 GHz.

Connection Diagram

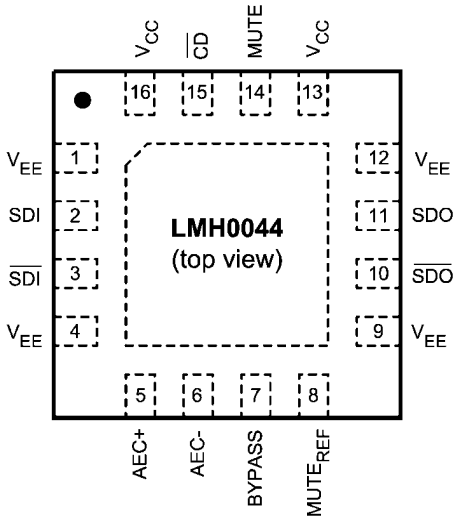

20177003

The exposed die attach pad is a negative electrical terminal for this device. It should be connected to the negative power supply voltage.

16-Pin LLP
Order Number LMH0044SQ
See NS Package Number SQB16A

Pin Descriptions

Pin #	Name	Description
1	V_{EE}	Negative power supply (ground).
2	SDI	Serial data true input.
3	$\overline{SDI}$	Serial data complement input.
4	V_{EE}	Negative power supply (ground).
5	AEC+	AEC loop filter external capacitor (1µF) positive connection.
6	AEC-	AEC loop filter external capacitor (1µF) negative connection.
7	BYPASS	Bypasses equalization and DC restoration when high. No equalization occurs in this mode.
8	$MUTE_{REF}$	Mute reference. Sets the threshold for $\overline{CD}$ and (with $\overline{CD}$ tied to MUTE) determines the maximum cable to be equalized before muting. $MUTE_{REF}$ may be unconnected for maximum equalization.
9	V_{EE}	Negative power supply (ground).
10	$\overline{SDO}$	Serial data complement output.
11	SDO	Serial data true output.
12	V_{EE}	Negative power supply (ground).
13	V_{CC}	Positive power supply (+3.3V).
14	MUTE	Output mute. To disable the mute function and enable the output, MUTE must be tied to GND or a low level signal. To force the outputs to a muted state, tie to V_{CC}. $\overline{CD}$ may be tied to this pin to inhibit the output when no input signal is present. MUTE has no function in BYPASS mode.
15	$\overline{CD}$	Carrier detect. $\overline{CD}$ is high when no signal is present. $\overline{CD}$ has no function in BYPASS mode.
16	V_{CC}	Positive power supply (+3.3V).
DAP	V_{EE}	Connect exposed DAP to negative power supply.

Block Diagram

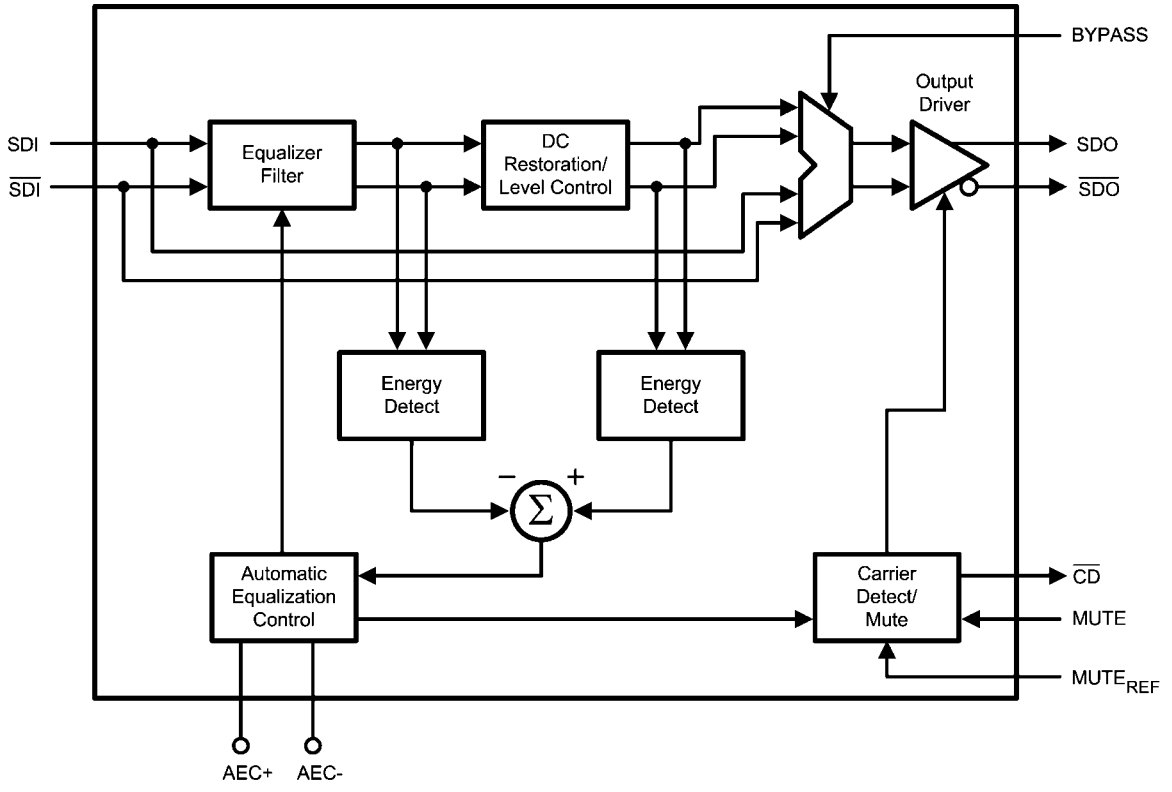

20177002

Device Operation

BLOCK DESCRIPTION

The **Equalizer Filter** block is a multi-stage adaptive filter. If Bypass is high, the equalizer filter is disabled.

The **DC Restoration / Level Control** block receives the differential signals from the equalizer filter block. This block incorporates a self-biasing DC restoration circuit to fully DC restore the signals. If Bypass is high, this function is disabled.

The signals before and after the DC Restoration / Level Control block are used to generate the **Automatic Equalization Control (AEC)** signal. This control signal sets the gain and bandwidth of the equalizer filter. The loop response in the AEC block is controlled by an external 1µF capacitor placed across the AEC+ and AEC- pins.

The **Carrier Detect / Mute** block generates the carrier detect signal and controls the mute function of the output. This block utilizes the $\overline{\text{CD}}$ and **MUTE** signals along with **Mute Reference (MUTE_{REF})**.

The **Output Driver** produces SDO and $\overline{\text{SDO}}$.

MUTE REFERENCE (MUTE_{REF})

The mute reference sets the threshold for $\overline{\text{CD}}$ and (with $\overline{\text{CD}}$ tied to MUTE) determines the amount of cable to equalize before automatically muting the outputs. This is set by applying a voltage inversely proportional to the length of cable to equalize. As the applied MUTE_{REF} voltage is increased, the amount of cable that can be equalized before carrier detect is de-asserted and the outputs are muted is decreased. MUTE_{REF} may be left unconnected for maximum equalization before muting.

CARRIER DETECT ($\overline{\text{CD}}$) AND MUTE

Carrier detect $\overline{\text{CD}}$ indicates if a valid signal is present at the LMH0044 input. If MUTE_{REF} is used, the carrier detect threshold will be altered accordingly. $\overline{\text{CD}}$ provides a high voltage when no signal is present at the LMH0044 input. $\overline{\text{CD}}$ is low when a valid input signal is detected.

MUTE can be used to manually mute or enable SDO and $\overline{\text{SDO}}$. Applying a high input to MUTE will mute the LMH0044 outputs. Applying a low input will force the outputs to be active.

$\overline{\text{CD}}$ and MUTE may be tied together to automatically mute the output when no input signal is present.

INPUT INTERFACING

The LMH0044 accepts either differential or single-ended input. The input must be AC coupled. Transformer coupling is not supported.

The LMH0044 correctly handles equalizer pathological signals for standard definition and high definition serial digital video, as described in SMPTE RP 178 and RP 198, respectively.

OUTPUT INTERFACING

The SDO and $\overline{\text{SDO}}$ outputs are internally loaded with 50Ω. They produce a 750 $\text{mV}_{\text{P-P}}$ differential output, or a 375 $\text{mV}_{\text{P-P}}$ single-ended output.

Application Information

PCB LAYOUT RECOMMENDATIONS

Please refer to the following Application Note on National's website: **AN-1372, "LMH0034 PCB Layout Techniques."** The PCB layout techniques in the application note apply to the LMH0044 as well.

REPLACING THE GENNUM GS1574A

The LMH0044 is footprint compatible with the Gennum GS1574A.

SUPPLY CURRENT VS. CABLE LENGTH

The supply current (I_{CC}) depends on the amount of cable being equalized. The current is highest for short cable and decreases as the cable length is increased. *Figure 1* shows supply current vs. Belden 1694A cable length for 1.485 Gbps data and *Figure 2* shows supply current vs. Belden 1694A cable length for 270 Mbps data.

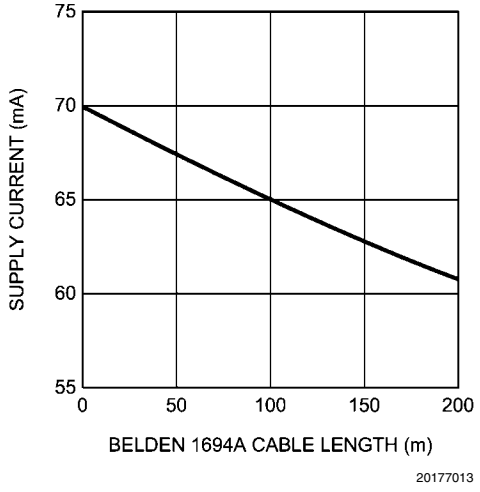

FIGURE 1. Supply Current vs. Belden 1694A Cable Length, 1.485 Gbps

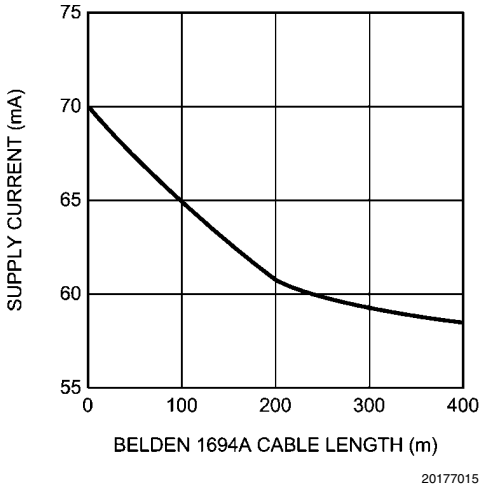

FIGURE 2. Supply Current vs. Belden 1694A Cable Length, 270 Mbps

Physical Dimensions inches (millimeters) unless otherwise noted

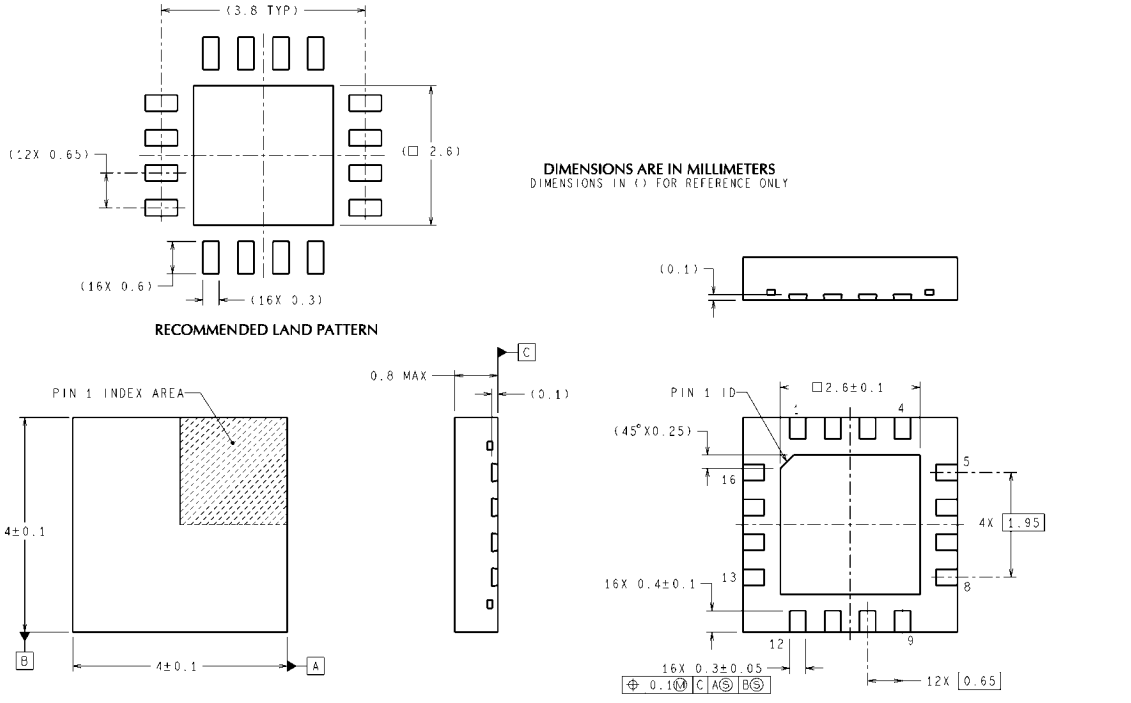

SQB16A (Rev A)

16-Pin LLP
Order Number LMH0044SQ
NS Package Number SQB16A

Notes

For more National Semiconductor product information and proven design tools, visit the following Web sites at:

Products		Design Support	
Amplifiers	www.national.com/amplifiers	WEBENCH® Tools	www.national.com/webench
Audio	www.national.com/audio	App Notes	www.national.com/appnotes
Clock and Timing	www.national.com/timing	Reference Designs	www.national.com/refdesigns
Data Converters	www.national.com/adc	Samples	www.national.com/samples
Interface	www.national.com/interface	Eval Boards	www.national.com/evalboards
LVDS	www.national.com/lvds	Packaging	www.national.com/packaging
Power Management	www.national.com/power	Green Compliance	www.national.com/quality/green
Switching Regulators	www.national.com/switchers	Distributors	www.national.com/contacts
LDOs	www.national.com/ldo	Quality and Reliability	www.national.com/quality
LED Lighting	www.national.com/led	Feedback/Support	www.national.com/feedback
Voltage Reference	www.national.com/vref	Design Made Easy	www.national.com/easy
PowerWise® Solutions	www.national.com/powerwise	Solutions	www.national.com/solutions
Serial Digital Interface (SDI)	www.national.com/sdi	Mil/Aero	www.national.com/milaero
Temperature Sensors	www.national.com/tempsensors	SolarMagic™	www.national.com/solarmagic
Wireless (PLL/VCO)	www.national.com/wireless	PowerWise® Design University	www.national.com/training

THE CONTENTS OF THIS DOCUMENT ARE PROVIDED IN CONNECTION WITH NATIONAL SEMICONDUCTOR CORPORATION ("NATIONAL") PRODUCTS. NATIONAL MAKES NO REPRESENTATIONS OR WARRANTIES WITH RESPECT TO THE ACCURACY OR COMPLETENESS OF THE CONTENTS OF THIS PUBLICATION AND RESERVES THE RIGHT TO MAKE CHANGES TO SPECIFICATIONS AND PRODUCT DESCRIPTIONS AT ANY TIME WITHOUT NOTICE. NO LICENSE, WHETHER EXPRESS, IMPLIED, ARISING BY ESTOPPEL OR OTHERWISE, TO ANY INTELLECTUAL PROPERTY RIGHTS IS GRANTED BY THIS DOCUMENT.

TESTING AND OTHER QUALITY CONTROLS ARE USED TO THE EXTENT NATIONAL DEEMS NECESSARY TO SUPPORT NATIONAL'S PRODUCT WARRANTY. EXCEPT WHERE MANDATED BY GOVERNMENT REQUIREMENTS, TESTING OF ALL PARAMETERS OF EACH PRODUCT IS NOT NECESSARILY PERFORMED. NATIONAL ASSUMES NO LIABILITY FOR APPLICATIONS ASSISTANCE OR BUYER PRODUCT DESIGN. BUYERS ARE RESPONSIBLE FOR THEIR PRODUCTS AND APPLICATIONS USING NATIONAL COMPONENTS. PRIOR TO USING OR DISTRIBUTING ANY PRODUCTS THAT INCLUDE NATIONAL COMPONENTS, BUYERS SHOULD PROVIDE ADEQUATE DESIGN, TESTING AND OPERATING SAFEGUARDS.

EXCEPT AS PROVIDED IN NATIONAL'S TERMS AND CONDITIONS OF SALE FOR SUCH PRODUCTS, NATIONAL ASSUMES NO LIABILITY WHATSOEVER, AND NATIONAL DISCLAIMS ANY EXPRESS OR IMPLIED WARRANTY RELATING TO THE SALE AND/OR USE OF NATIONAL PRODUCTS INCLUDING LIABILITY OR WARRANTIES RELATING TO FITNESS FOR A PARTICULAR PURPOSE, MERCHANTABILITY, OR INFRINGEMENT OF ANY PATENT, COPYRIGHT OR OTHER INTELLECTUAL PROPERTY RIGHT.

LIFE SUPPORT POLICY

NATIONAL'S PRODUCTS ARE NOT AUTHORIZED FOR USE AS CRITICAL COMPONENTS IN LIFE SUPPORT DEVICES OR SYSTEMS WITHOUT THE EXPRESS PRIOR WRITTEN APPROVAL OF THE CHIEF EXECUTIVE OFFICER AND GENERAL COUNSEL OF NATIONAL SEMICONDUCTOR CORPORATION. As used herein:

Life support devices or systems are devices which (a) are intended for surgical implant into the body, or (b) support or sustain life and whose failure to perform when properly used in accordance with instructions for use provided in the labeling can be reasonably expected to result in a significant injury to the user. A critical component is any component in a life support device or system whose failure to perform can be reasonably expected to cause the failure of the life support device or system or to affect its safety or effectiveness.

National Semiconductor and the National Semiconductor logo are registered trademarks of National Semiconductor Corporation. All other brand or product names may be trademarks or registered trademarks of their respective holders.

Copyright© 2009 National Semiconductor Corporation

For the most current product information visit us at www.national.com

National Semiconductor Americas Technical Support Center
Email: support@nsc.com
Tel: 1-800-272-9959

National Semiconductor Europe Technical Support Center
Email: europe.support@nsc.com

National Semiconductor Asia Pacific Technical Support Center
Email: ap.support@nsc.com

National Semiconductor Japan Technical Support Center
Email: jpn.feedback@nsc.com