10Gb/s Compact InP MZ Modulator with DWDM Laser

LMC10ZEG

Zero Chirp - High Power

The LMC10ZEG product, containing the Bookham Ultra High Power Strained Layer DFB laser chip and Zero chirp InP MZ modulator, has been specifically designed for use in 10 Gb/s high performance regional metro and long haul C band DWDM systems. By co-packaging the laser, locker, modulator, VOA in a package with the same footprint area as the industry standard 14-pin, the LMC10 series provides Mach-Zehnder performance at a price similar to lower performance alternatives. The internal optical attenuator allow fibre power stabilisation over life and temperature. The high output power, integral wavelength locking and high extinction ratio provides excellent OSNR to allow the device to be employed on multi-span long haul links.

Features:

- Variable mean modulated optical power range of 0 to -10dBm
- Zero Chirp +/-0.2 alpha
- Co-planar differential RF drive ≤3.0 volts
- Suitable for 50GHz ITU applications with +/-20pm λ accuracy over life
- Low Power Dissipation
- Industry Standard 14-pin footprint area
- Pins on one side to allow increased system density
- Unrivalled performance vs size
- Integrated VOA
- Qualified to Telcordia GR-468 CORE
- RoHS 5/6 compliant

Applications:

- **Long Haul** DWDM multi-span dispersion compensated links
- **Regional Metro** single spans with no dispersion compensation

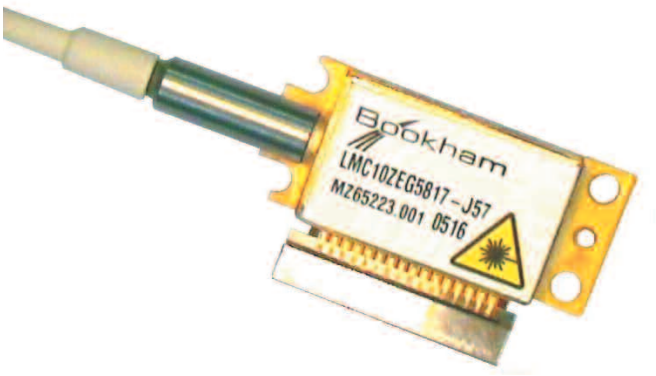

Using the LMC10ZEG

The recommended operational conditions for the LMC10ZEG are as follows:

MZ modulator arm DC bias conditions are set at start of life (SOL), (dynamic MZ DC bias control loops are not required). The VOA can be used in a control loop to set the start of life optical output power.

Characteristics

Parameter	Conditions	Min	Typ	Max	Unit
Module and Modulator Parameters					
Case temperature (Tcase)	external temp. of Tx case [1]	0		70	°C
Modulated output power	EOL over temperature [2]	0		7.5	dBm
Modulated optical power	EOL over temperature [3]			-10	dBm
Output power variation over case temperature	EOL [4]	-1.5		0.5	dB
AC extinction ratio (unfiltered)	EOL, 10.709Gb/s [5]	11			dB
AC extinction ratio (filtered)	EOL, 10.709Gb/s [5]	10			dB
Dispersion penalty SOL	[6]			1.2	dB
Dispersion penalty EOL	[6]			1.8	dB
Data bar arm bias	<9mA arm bias current	-3.3		-1	V
Data arm bias	<9mA arm bias current	-3.3		-1	V
Modulation drive voltage	per arm, pk-pk, 10.709Gb/s [7]	1.5		3	V
Optical rise time, fall time	20% - 80%			35	ps
Tolerable link optical reflection	[8]			-14	dB
Output optical return loss	[9]	20			dB
Optical crossing level	[10]	47		53	%
Modulator bandwidth	S21, -3dB [11]	10			GHz
Modulator chirp alpha parameter		-0.2		0.2	

Characteristics (continued)

Parameter	Conditions	Min	Typ	Max	Unit
Laser Source Parameters					
Laser forward current EOL	Wavelength locked			290	mA
Change in forward laser current EOL		-30		30	mA
Laser threshold current EOL		20		85	mA
Variation in laser wavelength with submount temp.		90		110	pm/°C
Laser forward voltage	EOL at locked wavelength			2	V
Laser linewidth	CW FWHM		5	20	MHz
Side mode suppression ratio (SMSR) [13]	At locked wavelength	40	50		dB
Average relative intensity noise (RIN)	200MHz to 8GHz			-140	dB/Hz
Laser modulation bandwidth		1			MHz

Parameter	Conditions	Min	Typ	Max	Unit
TEC and Thermal Parameters					
Thermistor 0/50 beta coefficient		3825	3864	3902	K
Thermistor resistance	For locked wavelength [12]	4500		8069	Ohms
TEC current	EOL, T Case = 70°C			1.1	A
TEC voltage	EOL, T Case = 70°C			3	V
Module power dissipation	EOL, T Case = 70°C			4	W

Parameter	Conditions	Min	Typ	Max	Unit
Wavelength Locker Parameters					
Etalon photocurrent at locked wavelength	EOL	0.08		1.3	mA
Reference photocurrent at locked wavelength	EOL	0.08		1.7	mA
Etalon slope at locking point	EOL	0.3		7	uA/pm
Reference slope at locked wavelength	EOL	0.1		3	uA/pm
Etalon / reference current ratio at locking point	[14]	0.2		2	ratio
Wavelength accuracy over life and temperature	[15]	-20		20	pm
Temperature coefficient of the wavelength locker	[16]		9.6		pm/°C
Photodiode reverse bias voltage		4.75	5	5.25	V
Photodiode dark current EOL				100	nA
Laser drive current tuning coefficient	[17]	3	4	7	pm/mA

Characteristics (continued)

Parameter	Conditions	Min	Typ	Max	Unit
VOA Parameters					
VOA power dissipation	(18)			320	mW
VOA bias voltage	(18)	-8		0	V
VOA photocurrent	(18)			40	mA

S11 Test Mask

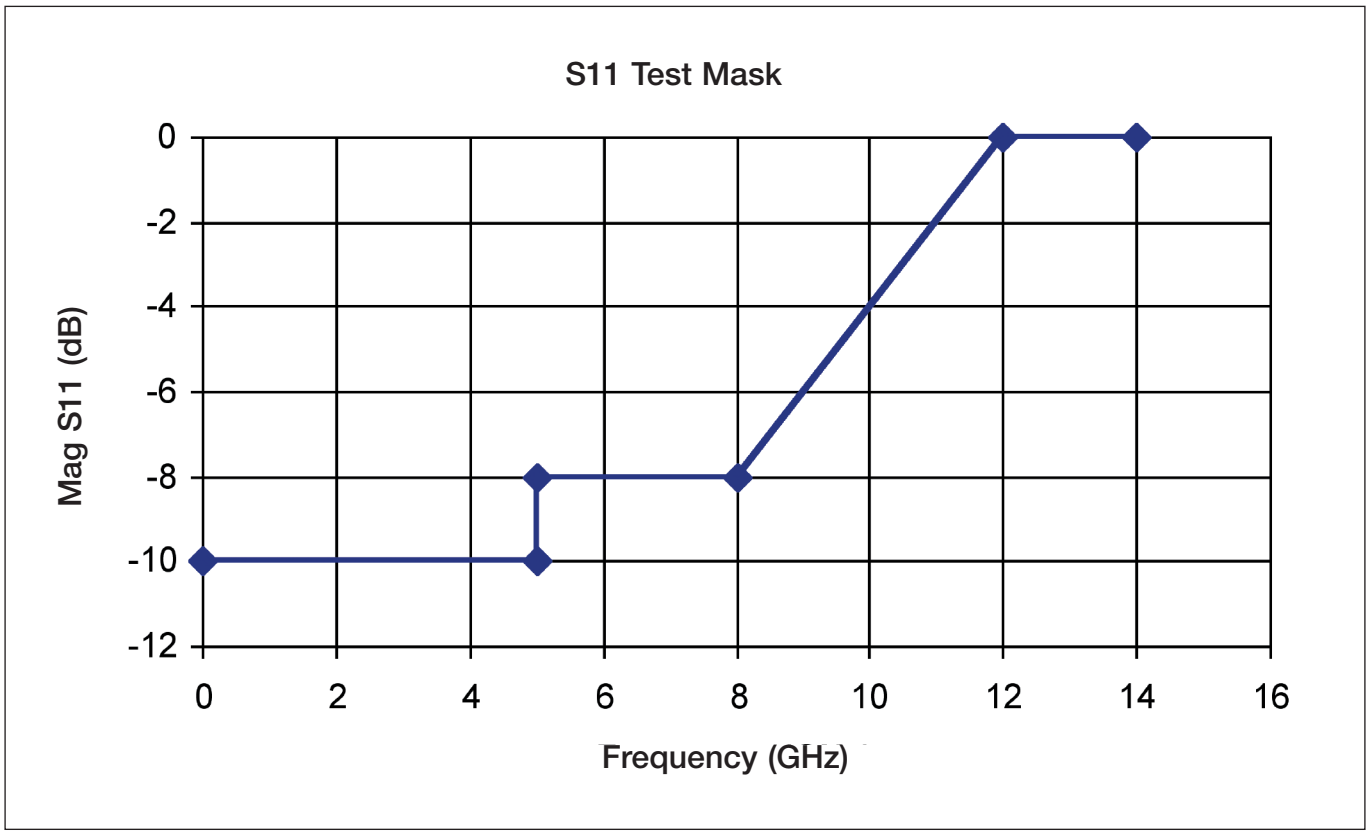

Glossary

BFM	Back Facet Monitor diode
CW	Continuous wave
EOL	End of life
FWHM	Full width half maximum
MZ	Mach-Zehnder interferometer
SOL	Start of life
Tcase	Case temperature
Pk-pk	Peak to peak

Notes to Characteristic Tables

[1] Refer to Bookham applications document AN0117 for Tx case temperature measurement definition.

[2] Specified range over life. Integral VOA set to minimum attenuation.

[3] Specified range over life. Integral VOA set to maximum attenuation.

[4] Optical power variation over the operational case temperature range of the Tx relative to 30C. Improved power tracking can be achieved by implementing closed loop power control using an external fiber power monitor and the LMC10ZEG variable optical attenuator.

[5] Measurement of AC extinction ratio is to be referenced to a Tektronix CSA8000B with 80C08C plug-in module. Test conditions: 10.709Gb/s, 2^{23}-1 PRBS NRZ sequence, 4th order Bessel-Thomson filter [where specified]. EOL condition includes variations in ER over the optical power range.

[6] Measured with +/-800ps/nm chromatic dispersion, ITU-T G652 optical fibre, 10.709Gb/s, 2^{23}-1 PRBS NRZ sequence. The penalty calculation is made at a BER level of $10^{-10.}$ RX OSNR > 30dB (35dB target), RBW of 0.1nm. The device is driven directly from a pattern generator. Receiver decision point self optimised for amplitude and phase.

[7] The differential modulation voltage is the peak to peak voltage that is required to achieve the required optical extinction ratio. The voltage and its complement must be AC coupled to each of the Data and Data-bar pins.

[8] The module is expected to operate without damage into a -14dB optical return loss equivalent to a fibre to air interface.

[9] Optical return loss looking back into the LMC10ZEG averaged over polarisation states.

[10] Set to nominal 50% at SOL, does not include effects of electrical driver aging.

[11] Electro-optic bandwidth. (S21 e/o). This measurement is made as a small signal measurement on each arm separately, 3% smoothed.

[12] The thermistor current should not exceed 100 µA to prevent self-heating effects. The thermistor resistance varies with temperature according to the following equation:

$$R = R(298.15K) \cdot \exp\left(\beta\left(\frac{1}{T} - \frac{1}{298.15K}\right)\right)$$

The thermistor resistance varies with temperature according to the following Steinhart-Hart equation, where C1= 1.2156x10-3, C2= 2.1925x10-4, C3=1.5241x10-7 for the thermistor type used. Temperature is required in Kelvin.

$$\frac{1}{T} = C_1 + C_2 \ln R + C_3 (\ln R)^3$$

[13] Measured at operating laser current Iop and an OSA resolution of 0.1nm and a span of 10nm centred on the peak wavelength.

[14] Maintain the start of life locking ratio over life to hold wavelength constant.

[15] Assumes wavelength is set to ITU wavelength at start of life, closed loop wavelength control by maintaining constant locking ratio.

[16] Specified by design, not measured unit to unit.

[17] Wavelength variation with change in laser drive current at constant temperature.

[18] VOA dissipation, current and voltage limits apply simultaneously. Do not exceed any one limit.

Refer to applications document AN0141.

Note: AC parameters such as extinction ratio and waveform crossing may be system dependent.

Absolute Maximum Ratings

Condition	Min	Typ	Max	Unit
Storage case temperature	-40		85	°C
Laser Current			600	mA
Laser Voltage	-2			V
MZ modulator voltage (DC) [1]	-12		0	V
MZ modulator arm bias currents (DC) [2]	-12			mA
Optical attenuator bias voltage (DC) [6]	-8			V
Optical attenuator bias current (DC) [6]			50	mA
Optical attenuator power dissipation [6]			320	mW
BFM bias	-15		0	V
TEC voltage [3]	-3		3	V
TEC current [3]	-1.8		1.8	A
Output optical power (continuous operation)			13	dBm
Lead soldering temperature [4]			260	°C
Fiber bend radius [5]	30			mm

Notes:

[1] With CW laser off, do not forward bias the MZ arms.

[2] Do not exceed the MZ and bias control tap maximum currents

[3] Maximum soldering time of 10 seconds, Tx case and fiber must not be subjected to extremes of temperature.

[4] Minimum fiber bend radius of 30mm, fiber may be damaged if exceeded.

[5] Thermistor operating range must not be exceeded.

[6] Optical attenuator voltage and current must be limited to ensure that the maximum power dissipation is not exceeded. Refer to Bookham applications note AN0141.

ESD Rating

This product is ESD compliant to Class 2 as defined by Telcordia TA-TSY-000870. ESD precautions must be used when handling this device and are required in both production and R&D environments.

Schematic Diagram

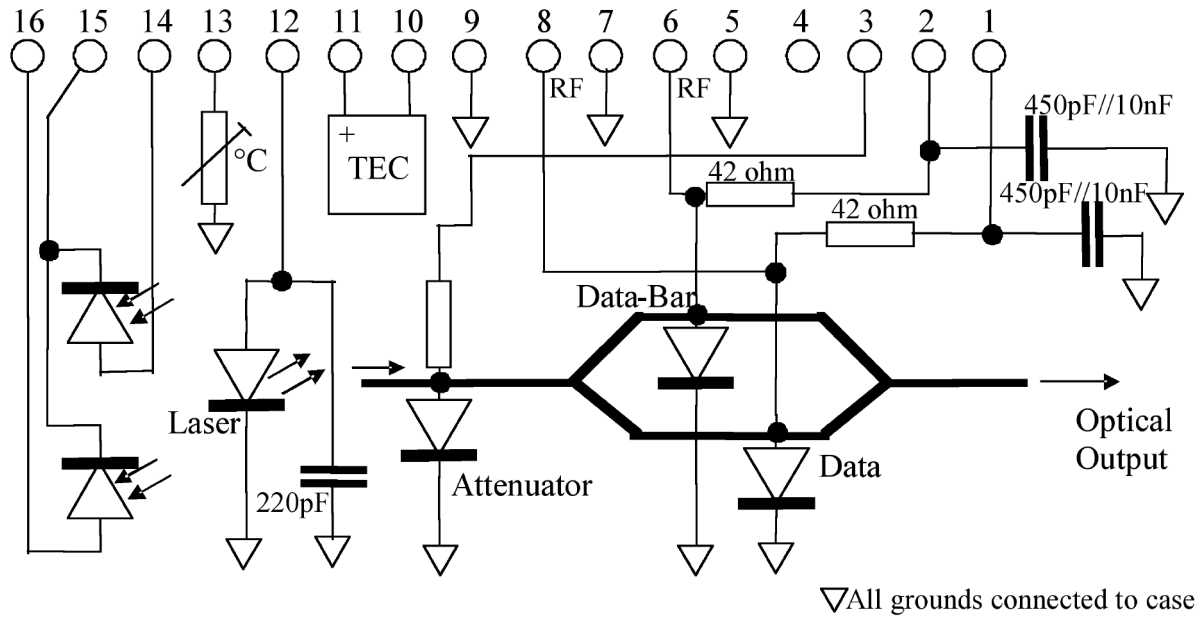

Pin Out Table

Pin #	Function	Pin #	Function
1	Data bias	9	Case ground
2	Data bar bias	10	TEC -
3	VOA	11	TEC +
4	Connect to -5V	12	Laser anode
5	Case ground	13	Thermistor
6	Data bar	14	Etalon BFM anode
7	Case ground	15	BFM common cathode
8	Data	16	Reference BFM anode

Pin Definitions

Pin1 MZ data DC Bias input and Pin 2 MZ data-bar DC Bias input.
DC bias voltages for data and data-bar MZ arms. These pins must be connected to a low noise negative DC voltage, typically around -2V (WRT case). These voltages are defined for each Tx in the deliverable data. A precision voltage source must be used, which is capable of sourcing up to 10mA to each pin. Refer to Bookham applications note AN0130 for circuit implementation and filtering suggestions.

Pin 3 VOA control pin.
VOA control pin. A negative DC voltage (WRT case) between 0V to -8V is applied to pin 3 to control the Variable Optical Attenuator (VOA). The VOA can be used in a control loop with an external power monitor to provide continuous optical power out of the optical fiber. Alternatively the VOA can be used in open loop control, set to a SOL optical power value with the specified range.

Pin 4 Unused pin.
Unused pin, Recommended that this pin is connected to -5V nominal.

Pin 5, 7 and 9 Ground.
Package ground connections.

Pin 6 MZ Data-bar modulation input and Pin 8 MZ Data modulation input.
Operation is typically using differential electrical drive voltages applied to both the Data and Data-bar MZ modulator inputs. AC RF coupling must be used.

Pin 10 TEC(-) and Pin 11 TEC(+).
The LMC10 contains a Peltier heatpump. Applying a negative voltage on Pin 10 with respect to Pin 11 will cause the internal optics to be cooled relative to the case temperature. Reversing the applied voltage will cause the internal structure to be heated. The heatpump must be used in a feedback controlled circuit in conjunction with the internal thermistor.

Pin 12 Laser Anode.
The laser is operated with a forward bias current, the laser cathode being connected internally to case ground.

Pin 13 Thermistor.
The thermistor is used in the TEC control loop for keeping the internal temperature at a constant value. It has a nominal resistance of 10k Ohms at a temperature of 25ºC and is not polarity sensitive, although one side of the thermistor is connected to package ground. Operating current should be limited to less than 100µA to prevent self heating errors. The exact thermistor value is supplied with each Tx as part of the deliverable test data to ensure the correct operating wavelength.

Pin 14 Back Facet Monitor Diode Anode (Etalon).
The signal from this photodiode carries the spectral response of the wavelength filter.

Pin 15 Back Facet Monitor Diode Common Cathode.
Common connection for the monitor diode cathodes.

Pin 16 Back Facet Monitor Diode Anode (Reference).
The signal from this photodiode is the reference signal and is proportional to the power emitted from the rear facet of the laser. The signal from the reference and etalon monitors are used in a control loop to maintain the wavelength of the laser at the defined lock point.

Wavelength Locker for the LMC10ZEG

The wavelength locker for the LMC10ZEG includes two photodiodes: the Reference photodiode provides a photocurrent proportional to the laser chip facet power, and the Etalon photodiode provides a photocurrent related to wavelength (frequency).

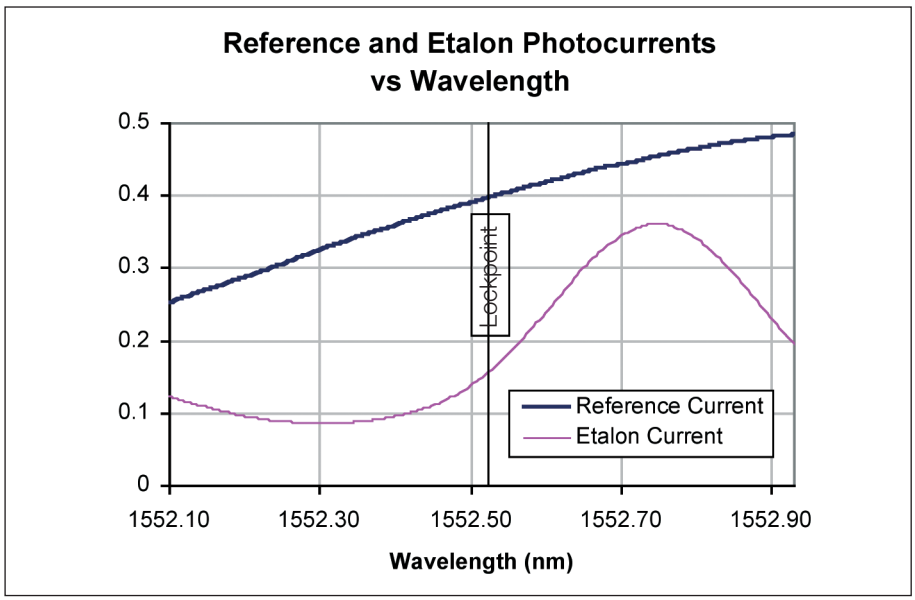

In order to lock the LMC10ZEG wavelength, a control circuit should be used which maintains the laser submount temperature constant over life and then controls the wavelength by varying the laser forward current to keep the ratio of the etalon and reference photodiode currents (Locking Ratio) constant. This may be achieved by keeping the discrimination value (LR x Iref) – Iet) at zero, where LR is the target Locking Ratio.

Refer to applications document AN0142 for further information on wavelength locking.

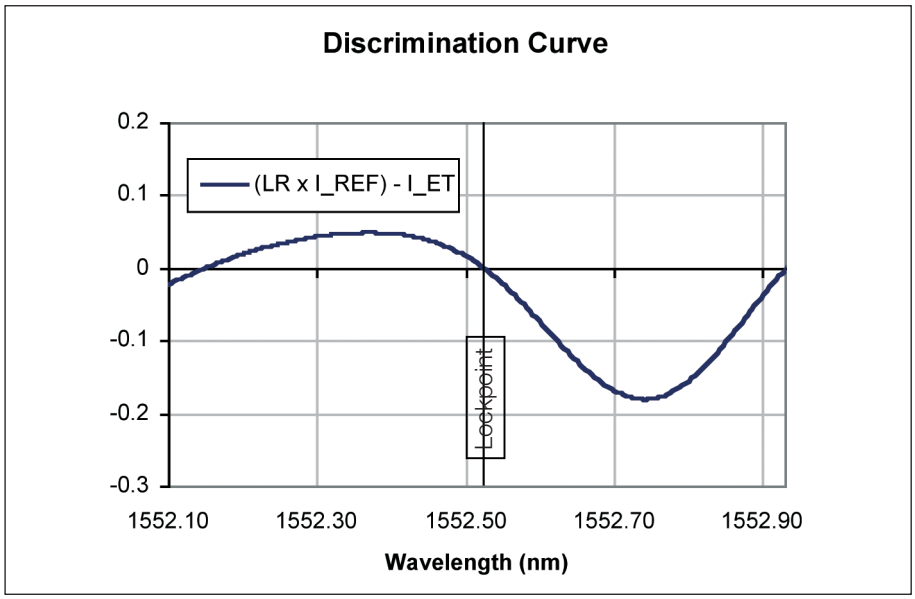

Package Outline Drawing

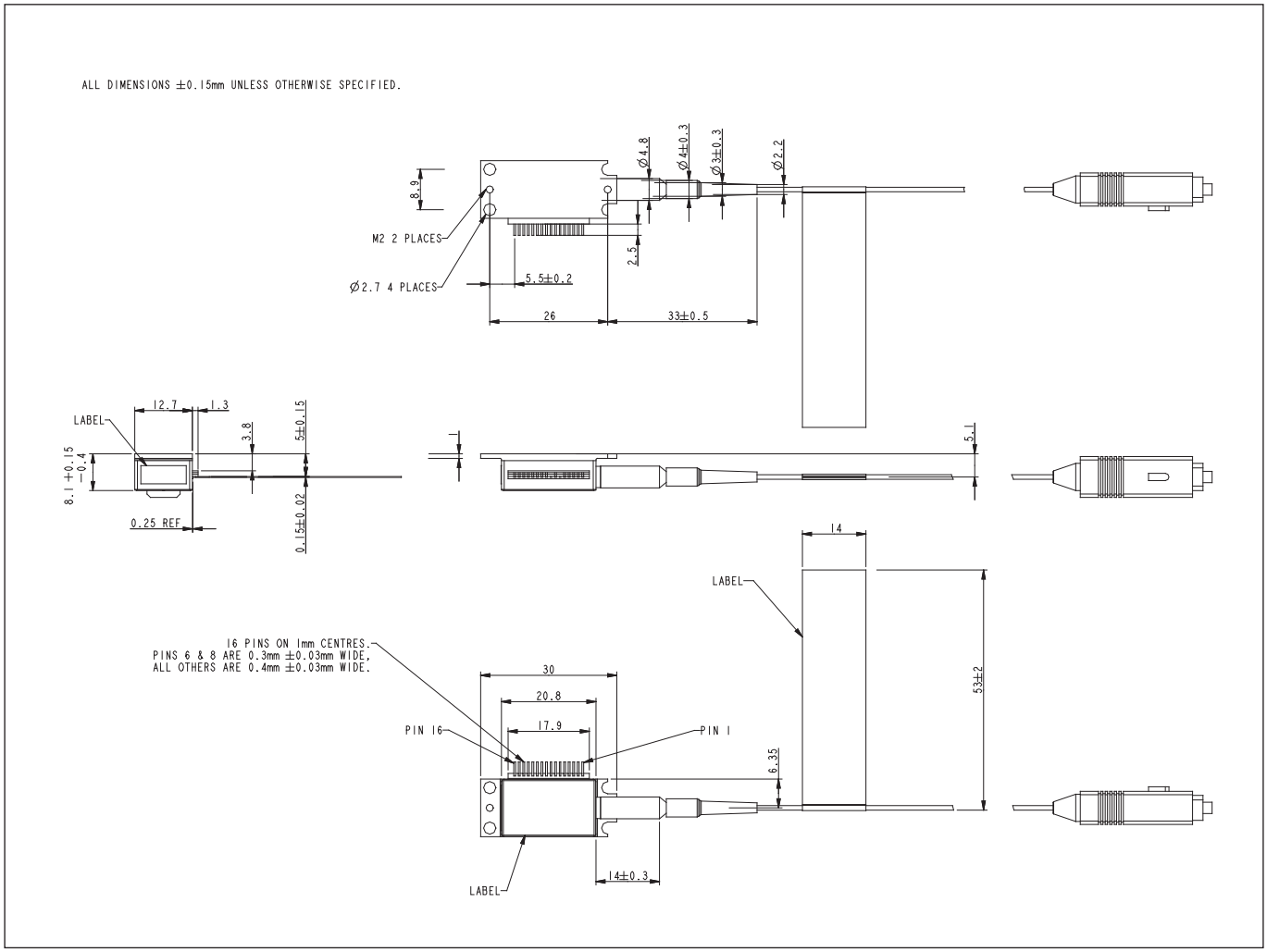

Typical 10Gb/s Eye Diagram

Test Conditions: 10.709Gb/s 2^{23}-1PRBS NRZ data.

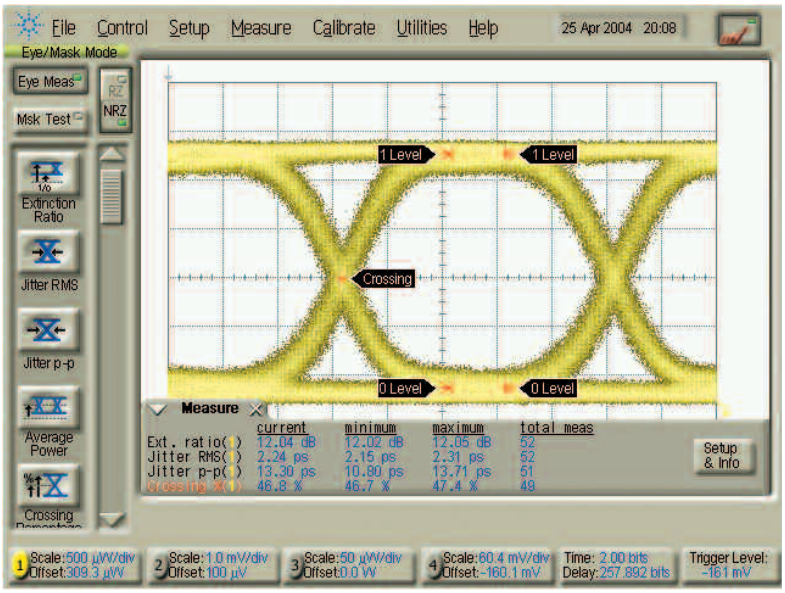

Typical Over Fibre Performance (SMF-28)

Test Conditions: 10.709Gb/s 2^{23}-1PRBS NRZ data, BER10^{-12}.

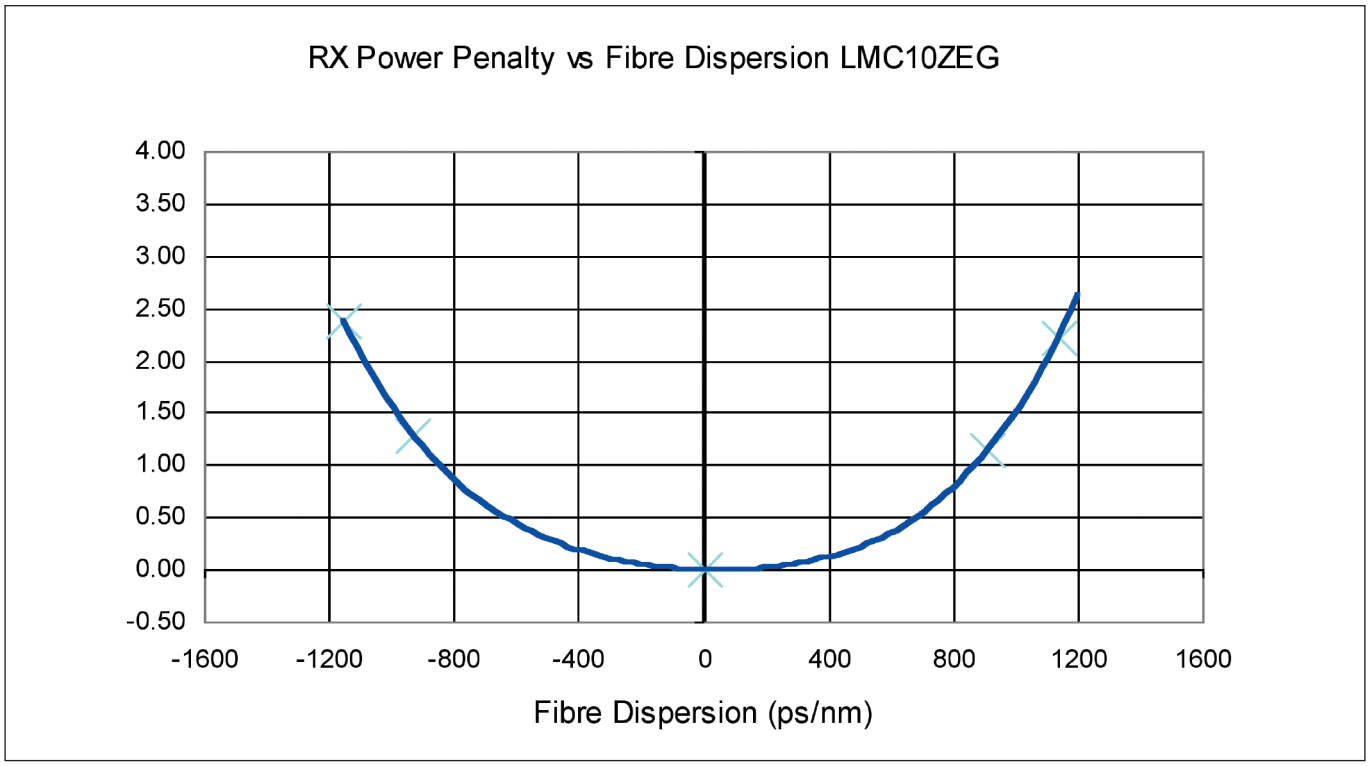

LMC10 Mounting Guidelines

The device must be attached to a heat-sink capable of dissipating a minimum of 4W. The surface of the heat-sink must be smooth (< 0.8 micron Ra) and flat (< 24.8 microns over the area and not convex in form). Attachment screws, thermal interface compounds or interface pads may be used but must not exert stress upon the device. Refer to Bookham applications document AN0117.

Note on Maximum Ratings and Handling Precautions

It is the nature of this device that unprotected semi-conductor junctions are connected directly to external package pins. Protection of these junctions would have an adverse effect on the performance of the device or the flexibility in its application and use. The user is requested to observe the 'Absolute Minimum and Maximum Ratings' in order to prevent damage or destruction of the device. In particular forward biasing the modulator, attenuator or power monitor junctions will lead to catastrophic damage if the current or voltage limits are exceeded. These junctions are also sensitive to ESD and electrical transients. The laser is similarly sensitive to reverse bias, ESD and electrical transients. These can lead to catastrophic device damage. The user is requested to ensure that operation of any control or bias circuits do not introduce electrical transients or adverse bias conditions during switch-on, switch-off or calibration and set-up routines. Appropriate ESD precautions are required in both production and R&D environments.

Applications Support

The following application notes are available to support customers using the LMC10ZEG:

Component Mounting Recommendations For the Bookham Technology LMC10 InP MZ Transmitter Module	AN0117
LMC10 Implementing Dynamic Wavelength Locker Loops For DWDM Optical Systems	AN0142
Compact LMC10 InP MZ Evaluation Board User Document	AN0130
LMC10ZEG Optical Power Adjustment Using the Integral VOA	AN0141
Recommended RF drivers for the LMC10 Integrated Optical Transmitter Product Portfolio	AN0137

Optical component evaluation platforms are available for all Bookham optical products.
Contact your regional sales representative for further information.

Deliverable Data

The following deliverable data is provided as a paper copy with each device and can also be made available as a text file from a customer specific site on a Bookham server with password protection.

Parameter	Units
Thermistor operating resistance	Ohms
Laser bias current	mA
Wavelength operating	nm
MZ bias data	Volts
MZ bias data-bar	Volts
Locking reference current	mA
Locking etalon current	mA
Locking current ratio	-
Locker slope sign [2]	+ or -
Laser threshold	mA
MZ drive voltage amplitude	Volts
Wavelength target (ITU-T)	nm
Mean modulated optical power [1]	dBm
Laser current tuning coefficient	pm/mA
BFM reference locker slope	µA/pm
BFM etalon locker slope	µA/pm

Notes:

[1] Mean modulated optical power with integral VOA set to minimum attenuation.

[2] Positive sign indicates etalon photocurrent increasing with wavelength at lock point. Refer to Bookham applications document AN0142 for locker slope definitions.

AC specified parameters may be derived from DC measurement data.

RoHS Compliance

Bookham is fully committed to environment protection and sustainable development and has set in place a comprehensive program for removing polluting and hazardous substances from all of its products. The relevant evidence of RoHS compliance is held as part of our controlled documentation for each of our compliant products. RoHS compliance parts are available to order, please refer to the ordering information section for further details.

Ordering Information:

LMC10ZEG
(Wavelength) – (Connector)
**** J28 = SC/PC
J57 = LC
J59 = MU

**** = last four digits of wavelength value
e.g. for λ_p=1533.47nm, ****=3347

WDM wavelength range: C-Band 1528-1565 nm
L-Band 1570-1606 nm

Standard fibre length 1000 +/- 100 mm (blue jacket)
Other connector types are available on request

To order the LMC10 on an evaluation board, please use the prefix EV in front on the product code e.g. EVLMC10ZEG****-J28

Bookham reserve the right to change without notice.

Contact Information

North America
Bookham Worldwide Headquarters
2584 Junction Ave.
San Jose
CA 95134
USA
- **Tel: +1 408 919 1500**
- **Fax: +1 408 919 6083**

www.bookham.com
sales@bookham.com

Europe
Paignton Office
Brixham Road
Paignton
Devon
TQ4 7BE
United Kingdom
- **Tel: +44 (0) 1803 66 2000**
- **Fax: +44 (0) 1803 66 2801**

Asia
Shenzhen Office
2 Phoenix Road
Futian Free Trade Zone
Shenzhen 518038
China
- **Tel: +86 755 33305888**
- **Fax: +86 755 33305805**
  +86 755 33305807

Important Notice

Performance figures, data and any illustrative material provided in this data sheet are typical and must be specifically confirmed in writing by Bookham before they become applicable to any particular order or contract. In accordance with the Bookham policy of continuous improvement specifications may change without notice. The publication of information in this data sheet does not imply freedom from patent or other protective rights of Bookham or others. Further details are available from any Bookham sales representative.



REFERENCE IEC 60825-1 Edition 1.2



This product complies with 21CFR 1040.10

ISO14001:1996
EMS 504193
TL9000 Rev 3.0 (ISO9001:2000)
FM15040



Caution - use of controls or adjustments or performance of procedures other than those specified herein may result in hazardous radiation exposure.

BH12848 Rev 1.0 January 2007.
©Bookham 2005. Bookham is a registered trademark of Bookham Inc.