LMA411

LOW NOISE PHEMT MMIC

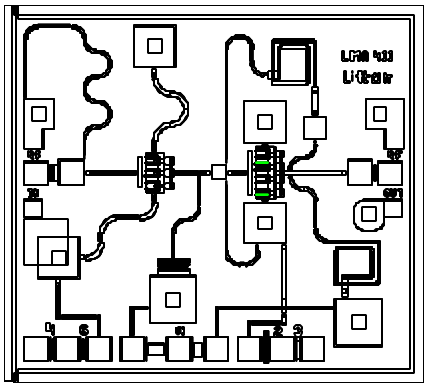

- FEATURES
  - 8.5 GHz to 14 GHz Frequency Band
  - 2 dB Noise Figure
  - 18 dB Gain
  - 19 dBm Output Power at Saturation
  - +6 V Single Bias Supply

- DESCRIPTION AND APPLICATIONS

The Filtronic Solid State LMA411 is a high dynamic range low noise PHEMT amplifier that operates from 8.5 to 14GHz. Reactively matched 2-stage amplifier provides 18dB nominal gain with 2dB typical noise figure and 1-dB gain compression power output of +17dBm that can be used as a pre-driver amplifier for phased array radar as well as commercial communications applications. Ground is provided to the circuitry through vias to the backside metallization.

- ELECTRICAL SPECIFICATIONS @ $T_{Ambient}$ = 25°C

(V_{DD} = +6.0V, Z_{IN} = Z_{OUT} = 50Ω)

Parameter	Symbol	Test Conditions	Min	Typ	Max	Units
Frequency Band	F		8.5		14	GHz
Small Signal Gain	S_{21}	R_S = 10/5Ω, I_{DS} = 50% I_{DSS}	17	18		dB
Saturated Drain Current	I_{DSS}	R_S = 0/0Ω	105	225	315	mA
Small Signal Gain Flatness	ΔS_{21}			±0.8	±1.2	dB
Noise Figure	NF			2	3.5	dB
Power at 1-dB Compression	P-1dB			17		dBm
Output Power at Saturation	P_{SAT}		19			dBm
Input Return Loss	S_{11}			-10		dB
Output Return Loss	S_{22}			-14		dB
Reverse Isolation	S_{12}			-34		dB

• ABSOLUTE MAXIMUM RATINGS

Parameter	Symbol	Test Conditions	Min	Max	Units
Drain Voltage	V_D	$T_{Ambient}$ = 22 ± 3 °C		7	V
Operating Current	I_{OP}	$T_{Ambient}$ = 22 ± 3 °C		315	mA
RF Input Power	P_{IN}	$T_{Ambient}$ = 22 ± 3 °C		15	dBm
Total Power Dissipation	P_{TOT}	$T_{Ambient}$ = 22 ± 3 °C		2	W
Channel Operating Temperature	T_{CH}	$T_{Ambient}$ = 22 ± 3 °C		150	ºC
Storage Temperature	T_{STG}	—	-65	165	ºC
Maximum Assembly Temperature (1 min. max.)	T_{MAX}	—		300	ºC

Notes:

- Operating conditions that exceed the Absolute Maximum Ratings could result in permanent damage to the device.
- Recommended Continuous Operating Limits should be observed for reliable device operation.
- Power Dissipation defined as: $P_{TOT} \equiv (P_{DC} + P_{IN}) - P_{OUT}$, where
  P_{DC}: DC Bias Power
  P_{IN}: RF Input Power
  P_{OUT}: RF Output Power
- This GaAs MMIC is susceptible to damage from Electrostatic Discharge. Proper precautions should be used when handling these devices.

- ASSEMBLY DRAWING

50% of Idss BIAS

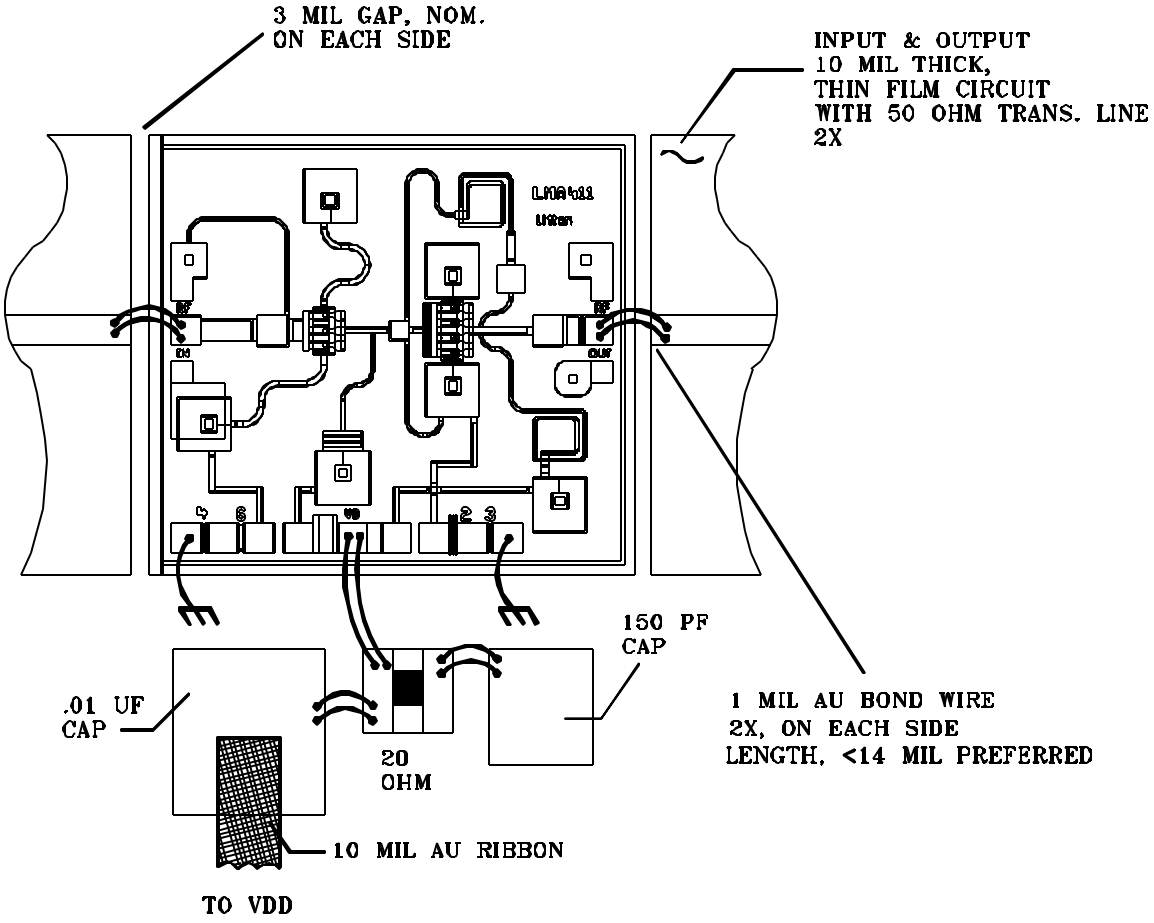

Notes:

- Recommended lead bond technique is thermocompression wedge bonding with 0.001" (25µm) diameter wire. The bond tool force shall be 35-38 gram. Bonding stage temperature shall be 230-240°C, heated tool (150-160°C) is recommended. Ultrasonic bonding is not recommended.
- The recommended die attach is a eutectic 80/20 Gold/Tin solder, using a stage temperature of 285-290°C. Maximum time at temperature is 1 minute. Use of forming gas (90% N_2, 10% H_2) for best results.
- Bond on bond or stitch bond acceptable.
- Conductor over conductor acceptable. Conductors must not short.

- ASSEMBLY DRAWING

75% of Idss BIAS

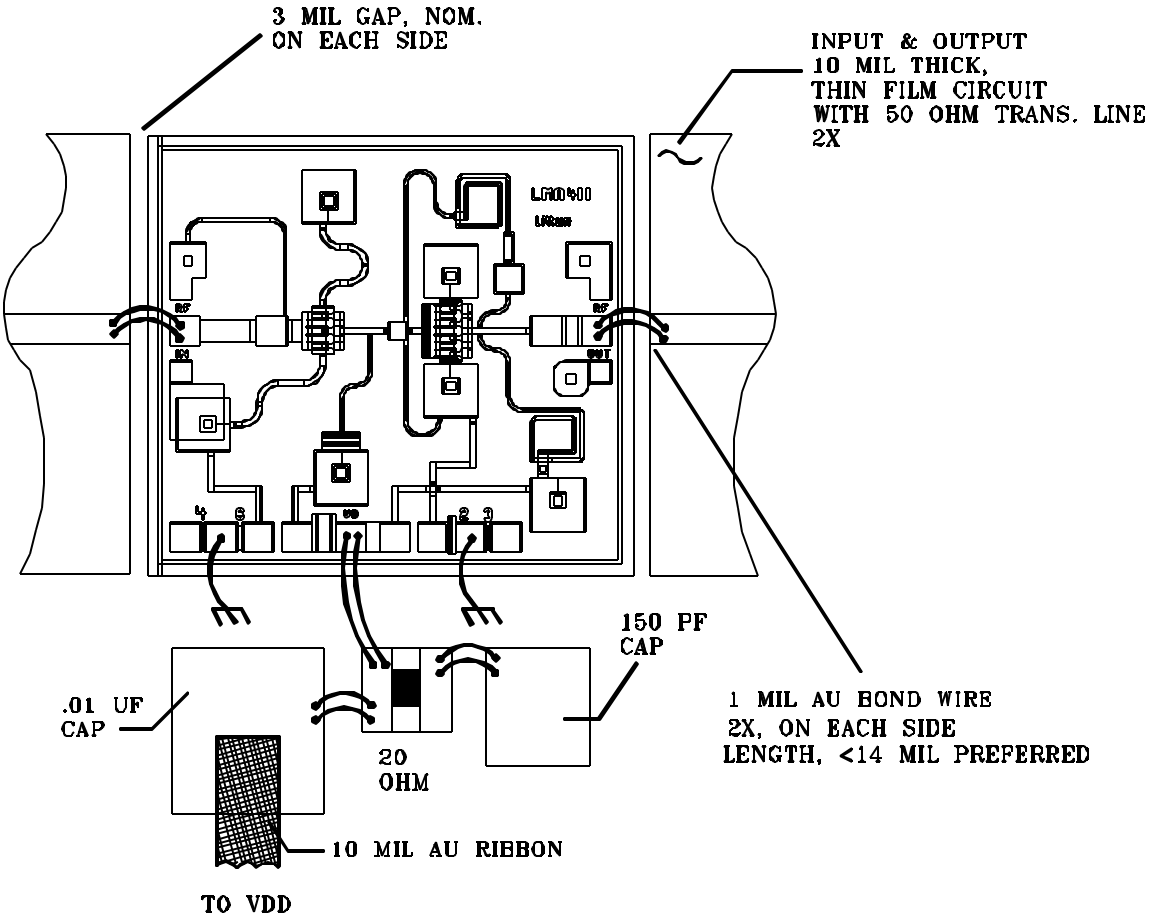

- MECHANICAL OUTLINE

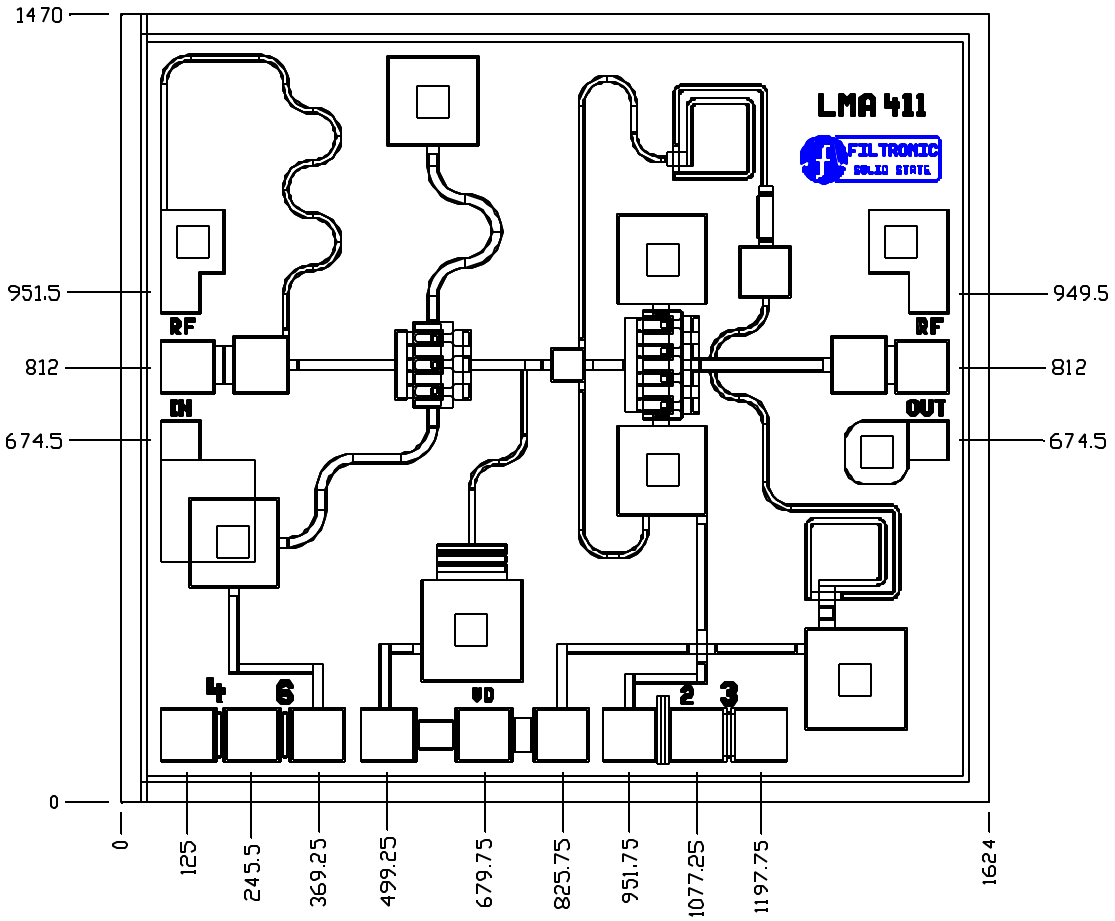

Notes:

- All units are in microns (µm).
- All bond pads are 100 X 100 µm^2.
-
- Unless otherwise specified.

- HANDLING PRECAUTIONS

To avoid damage to the devices care should be exercised during handling. Proper Electrostatic Discharge (ESD) precautions should be observed at all stages of storage, handling, assembly, and testing. These devices should be treated as Class 1A (0-500 V). Further information on ESD control measures can be found in MIL-STD-1686 and MIL-HDBK-263.