National Semiconductor

April 2003

LM86
±0.75˚C Accurate, Remote Diode and Local Digital Temperature Sensor with Two-Wire Interface

General Description

The LM86 is an 11-bit digital temperature sensor with a 2-wire System Management Bus (SMBus) serial interface. The LM86 accurately measures its own temperature as well as the temperature of an external device, such as processor thermal diode or diode connected transistor such as the 2N3904. The temperature of any ASIC can be accurately determined using the LM86 as long as a dedicated diode (semiconductor junction) is available on the target die. The LM86 remote sensor accuracy of ±0.75˚C is factory trimmed for the 1.008 typical non-ideality factor of the mobile Pentium™ III thermal diode. The LM86 has an Offset register to allow measuring other diodes without requiring continuous software management. Contact hardware.monitor.team@nsc.com to obtain the latest data for new processors.

Activation of the $\overline{\text{ALERT}}$ output occurs when any temperature goes outside a preprogrammed window set by the HIGH and LOW temperature limit registers or exceeds the T_CRIT temperature limit. Activation of the $\overline{\text{T_CRIT_A}}$ occurs when any temperature exceeds the T_CRIT programmed limit. The LM86 is pin and register compatible with the the Analog Devices ADM1032 and Maxim MAX6657/8.

Features

- Accurately senses die temperature of remote ICs or diode junctions
- Offset register allows sensing a variety of thermal diodes accurately
- On-board local temperature sensing
- 10 bit plus sign remote diode temperature data format, 0.125 ˚C resolution
- $\overline{\text{T_CRIT_A}}$ output useful for system shutdown
- $\overline{\text{ALERT}}$ output supports SMBus 2.0 protocol
- SMBus 2.0 compatible interface, supports TIMEOUT
- 8-pin MSOP and SOIC packages

Key Specifications

- Supply Voltage 3.0V to 3.6V
- Supply Current 0.8mA (typ)
- Local Temp Accuracy (includes quantization error)
  T_A=25˚C to 125˚C ±3.0˚C (max)
- Remote Diode Temp Accuracy (includes quantization error)
  T_A=30˚C, T_D=80˚C ±0.75˚C (max)
  T_A=30˚C to 50˚C, T_D=60˚C to 100˚C ±1.0˚C (max)
  T_A=0˚C to 85˚C, T_D=25˚C to 125˚C ±3.0˚C (max)

Applications

- Computer System Thermal Management (e.g. Laptop, Desktop, Workstations, Server)
- Electronic Test Equipment
- Office Electronics

Simplified Block Diagram

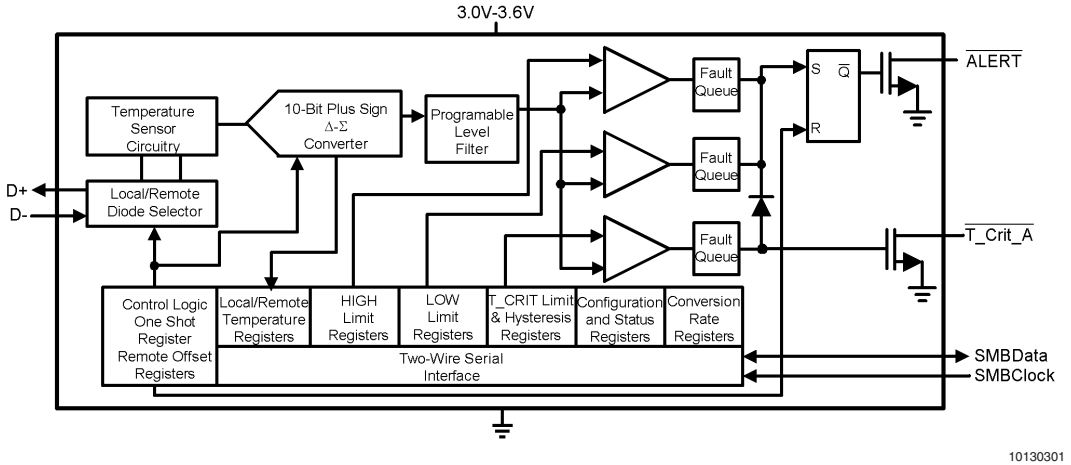

Pentium™ is a trademark of Intel Corporation.

© 2003 National Semiconductor Corporation

Connection Diagram

MSOP-8 or SOIC-8

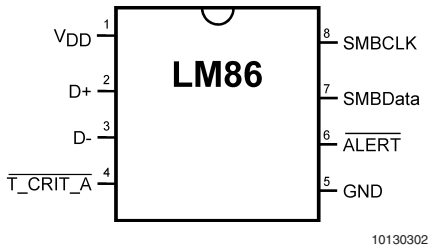

TOP VIEW

Ordering Information

	Package Marking	NS Package Number	Transport Media
LM86CIMM	T10C	MUA08A (MSOP-8)	1000 Units on Tape and Reel
LM86CIMMX	T10C	MUA08A (MSOP-8)	3500 Units on Tape and Reel
LM86CIM	LM86CIM	M08A (SOIC-8)	95 Units in Rail
LM86CIMX	LM86CIM	M08A (SOIC-8)	2500 Units on Tape and Reel

Pin Descriptions

Label	Pin #	Function	Typical Connection
V_{DD}	1	Positive Supply Voltage Input	DC Voltage from 3.0 V to 3.6 V
D+	2	Diode Current Source	To Diode Anode. Connected to remote discrete diode conected transistor junction or to the diode connected transistor junction on a remote IC whose die temperature is being sensed.
D–	3	Diode Return Current Sink	To Diode Cathode.
$\overline{T_CRIT_A}$	4	T_CRIT Alarm Output, Open-Drain, Active-Low	Pull-Up Resistor, Controller Interrupt or Power Supply Shutdown Control
GND	5	Power Supply Ground	Ground
$\overline{ALERT}$	6	Interrupt Output, Open-Drain, Active-Low	Pull-Up Resistor, Controller Interrupt or Alert Line
SMBData	7	SMBus Bi-Directional Data Line, Open-Drain Output	From and to Controller, Pull-Up Resistor
SMBCLK	8	SMBus Input	From Controller, Pull-Up Resistor

Typical Application

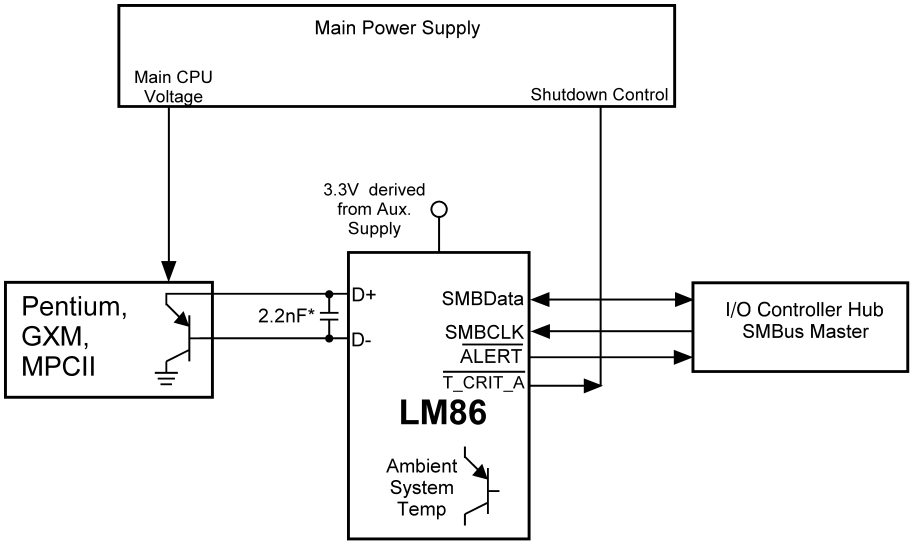

*Note: 2.2nF Capacitor must be placed as close as possible to D+ and D- pins of the LM86.

10130303

Absolute Maximum Ratings (Note 1)

Supply Voltage	−0.3 V to 6.0 V
Voltage at SMBData, SMBCLK, $\overline{\text{ALERT}}$, $\overline{\text{T_CRIT_A}}$	−0.5V to 6.0V
Voltage at Other Pins	−0.3 V to (V_{DD} + 0.3 V)
D− Input Current	±1 mA
Input Current at All Other Pins (Note 2)	±5 mA
Package Input Current (Note 2)	30 mA
SMBData, $\overline{\text{ALERT}}$, $\overline{\text{T_CRIT_A}}$ Output Sink Current	10 mA
Storage Temperature	−65˚C to +150˚C
Soldering Information, Lead Temperature SOIC-8 or MSOP-8 Packages (Note 3)	
Vapor Phase (60 seconds)	215˚C
Infrared (15 seconds)	220˚C
ESD Susceptibility (Note 4)	
Human Body Model	2000 V
Machine Model	200 V

Operating Ratings

(Notes 1, 5)

Operating Temperature Range	0˚C to +125˚C
Electrical Characteristics Temperature Range	$T_{MIN} \le T_A \le T_{MAX}$
LM86	$0˚C \le T_A \le +85˚C$
Supply Voltage Range (V_{DD})	+3.0V to +3.6V

Temperature-to-Digital Converter Characteristics

Unless otherwise noted, these specifications apply for V_{DD}=+3.0Vdc to 3.6Vdc. **Boldface limits apply for $T_A = T_J = T_{MIN} \le T_A \le T_{MAX}$;** all other limits $T_A = T_J$=+25˚C, unless otherwise noted.

Parameter	Conditions		Typical (Note 6)	Limits (Note 7)	Units (Limit)
Temperature Accuracy Using Local Diode	T_A = +25˚C to +125˚C, (Note 8)		±1	**±3**	˚C (max)
Temperature Accuracy Using Remote Diode of mobile Pentium III with typical non-ideality of 1.008. For other processors email hardware.monitor.team@nsc.com to obtain the latest data. (T_D is the Remote Diode Junction Temperature)	T_A = +30˚C	T_D = +80˚C		**±0.75**	˚C (max)
	T_A = +30˚C to +50˚C	T_D = +60˚C to +100˚C		**±1**	˚C (max)
	T_A = +0˚C to +85˚C	T_D = +25˚C to +125˚C		**±3**	˚C (max)
Remote Diode Measurement Resolution			11		Bits
			0.125		˚C
Local Diode Measurement Resolution			8		Bits
			1		˚C
Conversion Time of All Temperatures at the Fastest Setting	(Note 10)		31.25	**34.4**	ms (max)
Quiescent Current (Note 9)	SMBus Inactive, 16Hz conversion rate		0.8	**1.7**	mA (max)
	Shutdown		315		µA
D− Source Voltage			0.7		V
Diode Source Current	(D+ − D−)=+ 0.65V; high level		160	**315**	µA (max)
				110	µA (min)
	Low level		13	**20**	µA (max)
				7	µA (min)
$\overline{\text{ALERT}}$ and $\overline{\text{T_CRIT_A}}$ Output Saturation Voltage	I_{OUT} = 6.0 mA			**0.4**	V (max)
Power-On Reset Threshold	Measure on V_{DD} input, falling edge			**2.4** **1.8**	V (max) V (min)
Local and Remote HIGH Default Temperature settings	(Note 11)		+70		˚C
Local and Remote LOW Default Temperature settings	(Note 11)		0		˚C

Temperature-to-Digital Converter Characteristics (Continued)

Unless otherwise noted, these specifications apply for V_{DD}=+3.0Vdc to 3.6Vdc. **Boldface limits apply for $T_A = T_J = T_{MIN} \leq T_A \leq T_{MAX}$;** all other limits $T_A = T_J$=+25˚C, unless otherwise noted.

Parameter	Conditions	Typical (Note 6)	Limits (Note 7)	Units (Limit)
Local and Remote T_CRIT Default Temperature Setting	(Note 11)	+85		˚C

Logic Electrical Characteristics

DIGITAL DC CHARACTERISTICS Unless otherwise noted, these specifications apply for V_{DD}=+3.0 to 3.6 Vdc. **Boldface limits apply for $T_A = T_J = T_{MIN}$ to T_{MAX};** all other limits $T_A = T_J$=+25˚C, unless otherwise noted.

Symbol	Parameter	Conditions	Typical (Note 6)	Limits (Note 7)	Units (Limit)
SMBData, SMBCLK INPUTS					
$V_{IN(1)}$	Logical “1” Input Voltage			**2.1**	V (min)
$V_{IN(0)}$	Logical “0”Input Voltage			**0.8**	V (max)
$V_{IN(HYST)}$	SMBData and SMBCLK Digital Input Hysteresis		400		mV
$I_{IN(1)}$	Logical “1” Input Current	$V_{IN} = V_{DD}$	0.005	**±10**	µA (max)
$I_{IN(0)}$	Logical “0” Input Current	V_{IN} = 0 V	–0.005	**±10**	µA (max)
C_{IN}	Input Capacitance		5		pF
ALL DIGITAL OUTPUTS					
I_{OH}	High Level Output Current	$V_{OH} = V_{DD}$		**10**	µA (max)
V_{OL}	SMBus Low Level Output Voltage	I_{OL} = 4mA I_{OL} = 6mA		**0.4** **0.6**	V (max)

SMBus DIGITAL SWITCHING CHARACTERISTICS Unless otherwise noted, these specifications apply for V_{DD}=+3.0 Vdc to +3.6 Vdc, C_L (load capacitance) on output lines = 80 pF. **Boldface limits apply for $T_A = T_J = T_{MIN}$ to T_{MAX};** all other limits $T_A = T_J$ = +25˚C, unless otherwise noted. The switching characteristics of the LM86 fully meet or exceed the published specifications of the SMBus version 2.0. The following parameters are the timing relationships between SMBCLK and SMBData signals related to the LM86. They adhere to but are not necessarily the SMBus bus specifications.

Symbol	Parameter	Conditions	Typical (Note 6)	Limits (Note 7)	Units (Limit)
f_{SMB}	SMBus Clock Frequency			**100** **10**	kHz (max) kHz (min)
t_{LOW}	SMBus Clock Low Time	from $V_{IN(0)}$max to $V_{IN(0)}$max		**4.7** **25**	µs (min) ms (max)
t_{HIGH}	SMBus Clock High Time	from $V_{IN(1)}$min to $V_{IN(1)}$min		**4.0**	µs (min)
$t_{R,SMB}$	SMBus Rise Time	(Note 12)	1		µs (max)
$t_{F,SMB}$	SMBus Fall Time	(Note 13)	0.3		µs (max)
t_{OF}	Output Fall Time	C_L = 400pF, I_O = 3mA, (Note 13)		**250**	ns (max)
$t_{TIMEOUT}$	SMBData and SMBCLK Time Low for Reset of Serial Interface (Note 14)			**25** **35**	ms (min) ms (max)
$t_{SU;DAT}$	Data In Setup Time to SMBCLK High			**250**	ns (min)
$t_{HD;DAT}$	Data Out Stable after SMBCLK Low			**300** **900**	ns (min) ns (max)
$t_{HD;STA}$	Start Condition SMBData Low to SMBCLK Low (Start condition hold before the first clock falling edge)			**100**	ns (min)
$t_{SU;STO}$	Stop Condition SMBCLK High to SMBData Low (Stop Condition Setup)			**100**	ns (min)
$t_{SU;STA}$	SMBus Repeated Start-Condition Setup Time, SMBCLK High to SMBData Low			**0.6**	µs (min)

SMBus DIGITAL SWITCHING CHARACTERISTICS Unless otherwise noted, these specifications apply for V_{DD}=+3.0 Vdc to +3.6 Vdc, C_L (load capacitance) on output lines = 80 pF. **Boldface limits apply for $T_A = T_J = T_{MIN}$ to T_{MAX};** all other limits $T_A = T_J$ = +25˚C, unless otherwise noted. The switching characteristics of the LM86 fully meet or exceed the published specifications of the SMBus version 2.0. The following parameters are the timing relationships between SMBCLK and SMBData signals related to the LM86. They adhere to but are not necessarily the SMBus bus specifications.

Symbol	Parameter	Conditions	Typical (Note 6)	Limits (Note 7)	Units (Limit)
t_{BUF}	SMBus Free Time Between Stop and Start Conditions			**1.3**	µs (min)

SMBus Communication

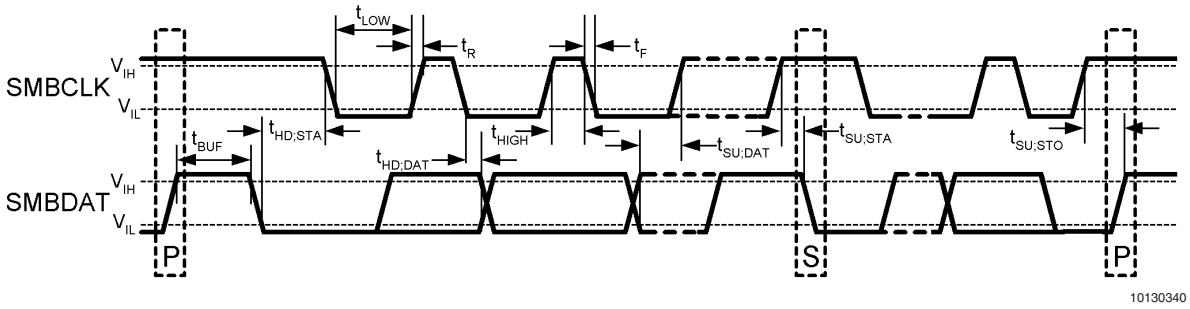

Note 1: Absolute Maximum Ratings indicate limits beyond which damage to the device may occur. DC and AC electrical specifications do not apply when operating the device beyond its rated operating conditions.

Note 2: When the input voltage (V_I) at any pin exceeds the power supplies (V_I < GND or V_I > V_{DD}), the current at that pin should be limited to 5 mA.

Parasitic components and or ESD protection circuitry are shown in the figure below for the LM86's pins. The nominal breakdown voltage of D3 is 6.5 V. Care should be taken not to forward bias the parasitic diode, D1, present on pins: D+, D–. Doing so by more than 50 mV may corrupt a temperature measurements.

Pin Name	PIN #	D1	D2	D3	D4	D5	D6	R1	SNP	ESD CLAMP
V_{DD} (V+)	1			x						x
D+	2	x	x			x	x	x		x
D–	3	x	x		x	x	x			x
$\overline{T_CRIT_A}$	4						x	x	x	
$\overline{ALERT}$	6						x	x	x	
SMBData	7						x	x	x	
SMBCLK	8								x	

Note: An "x" indicates that the diode exists.

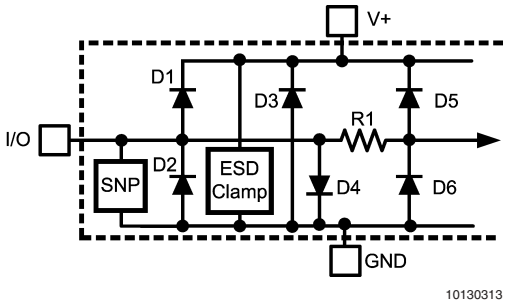

FIGURE 1. ESD Protection Input Structure

Note 3: See the URL "http://www.national.com/packaging/" for other recommendations and methods of soldering surface mount devices.

Note 4: Human body model, 100pF discharged through a 1.5kΩ resistor. Machine model, 200pF discharged directly into each pin.

Note 5: Thermal resistance junction-to-ambient when attached to a printed circuit board with 2 oz. foil:

– SOIC-8 = 168˚C/W

– MSOP-8 = 210˚C/W

Note 6: Typicals are at T_A = 25˚C and represent most likely parametric norm.

Note 7: Limits are guaranteed to National's AOQL (Average Outgoing Quality Level).

Note 8: Local temperature accuracy does not include the effects of self-heating. The rise in temperature due to self-heating is the product of the internal power dissipation of the LM86 and the thermal resistance. See (Note 5) for the thermal resistance to be used in the self-heating calculation.

Note 9: Quiescent current will not increase substantially with an SMBus.

Note 10: This specification is provided only to indicate how often temperature data is updated. The LM86 can be read at any time without regard to conversion state (and will yield last conversion result).

Note 11: Default values set at power up.

Note 12: The output rise time is measured from ($V_{IN(0)}$max + 0.15V) to ($V_{IN(1)}$min – 0.15V).

Note 13: The output fall time is measured from ($V_{IN(1)}$min - 0.15V) to ($V_{IN(1)}$min + 0.15V).

Note 14: Holding the SMBData and/or SMBCLK lines Low for a time interval greater than $t_{TIMEOUT}$ will reset the LM86's SMBus state machine, therefore setting SMBData and SMBCLK pins to a high impedance state.

1.0 Functional Description

The LM86 temperature sensor incorporates a delta V_{BE} based temperature sensor using a Local or Remote diode and a 10-bit plus sign ADC (Delta-Sigma Analog-to-Digital Converter). The LM86 is compatible with the serial SMBus version 2.0 two-wire interface. Digital comparators compare the measured Local Temperature (LT) to the Local High (LHS), Local Low (LLS) and Local T_CRIT (LCS) user-programmable temperature limit registers. The measured Remote Temperature (RT) is digitally compared to the Remote High (RHS), Remote Low (RLS) and Remote T_CRIT (RCS) user-programmable temperature limit registers. Activation of the $\overline{\text{ALERT}}$ output indicates that a comparison is greater than the limit preset in a T_CRIT or HIGH limit register or less than the limit preset in a LOW limit register. The $\overline{\text{T_CRIT_A}}$ output responds as a true comparator with built in hysteresis. The hysteresis is set by the value placed in the Hysteresis register (TH). Activation of $\overline{\text{T_CRIT_A}}$ occurs when the temperature is above the T_CRIT setpoint. $\overline{\text{T_CRIT_A}}$ remains activated until the temperature goes below the setpoint calculated by T_CRIT – TH. The hysteresis register impacts both the remote temperature and local temperature readings.

The LM86 may be placed in a low power consumption (Shutdown) mode by setting the $\overline{\text{RUN}}$/STOP bit found in the Configuration register. In the Shutdown mode, the LM86's SMBus interface remains while all circuitry not required is turned off.

The Local temperature reading and setpoint data registers are 8-bits wide. The format of the 11-bit remote temperature data is a 16-bit left justified word. Two 8-bit registers, high and low bytes, are provided for each setpoint as well as the temperature reading. Two offset registers (RTOLB and RTOHB) can be used to compensate for non_ideality error, discussed further in *Section 4.1 DIODE NON-IDEALITY*. The remote temperature reading reported is adjusted by subtracting from or adding to the actual temperature reading the value placed in the offset registers.

1.1 CONVERSION SEQUENCE

The LM86 takes approximately 31.25 ms to convert the Local Temperature (LT), Remote Temperature (RT), and to update all of its registers. Only during the conversion process the busy bit (D7) in the Status register (02h) is high. These conversions are addressed in a round robin sequence. The conversion rate may be modified by the Conversion Rate Register (04h). When the conversion rate is modified a delay is inserted between conversions, the actual conversion time remains at 31.25ms. Different conversion rates will cause the LM86 to draw different amounts of supply current as shown in *Figure 2*.

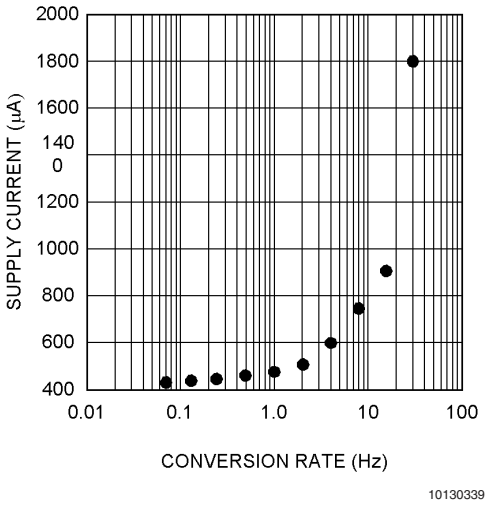

FIGURE 2. Conversion Rate Effect on Power Supply Current

1.2 THE $\overline{\text{ALERT}}$ OUTPUT

The LM86's $\overline{\text{ALERT}}$ pin is an active-low open-drain output that is triggered by a temperature conversion that is outside the limits defined by the temperature setpoint registers. Reset of the $\overline{\text{ALERT}}$ output is dependent upon the selected method of use. The LM86's $\overline{\text{ALERT}}$ pin is versatile and will accommodate three different methods of use to best serve the system designer: as a temperature comparator, as a temperature based interrupt flag, and as part of an SMBus ALERT system. The three methods of use are further described below. The ALERT and interrupt methods are different only in how the user interacts with the LM86.

Each temperature reading (LT and RT) is associated with a T_CRIT setpoint register (LCS, RCS), a HIGH setpoint register (LHS and RHS) and a LOW setpoint register (LLS and RLS). At the end of every temperature reading, a digital comparison determines whether that reading is above its HIGH or T_CRIT setpoint or below its LOW setpoint. If so, the corresponding bit in the STATUS REGISTER is set. If the ALERT mask bit is not high, any bit set in the STATUS REGISTER, with the exception of Busy (D7) and OPEN (D2), will cause the $\overline{\text{ALERT}}$ output to be pulled low. Any temperature conversion that is out of the limits defined by the temperature setpoint registers will trigger an ALERT. Additionally, the ALERT mask bit in the Configuration register must be cleared to trigger an ALERT in all modes.

1.2.1 $\overline{\text{ALERT}}$ Output as a Temperature Comparator

When the LM86 is implemented in a system in which it is not serviced by an interrupt routine, the $\overline{\text{ALERT}}$ output could be used as a temperature comparator. Under this method of use, once the condition that triggered the $\overline{\text{ALERT}}$ to go low is

1.0 Functional Description (Continued)

no longer present, the $\overline{\text{ALERT}}$ is de-asserted (*Figure 3*). For example, if the $\overline{\text{ALERT}}$ output was activated by the comparison of LT > LHS, when this condition is no longer true the $\overline{\text{ALERT}}$ will return HIGH. This mode allows operation without software intervention, once all registers are configured during set-up. In order for the $\overline{\text{ALERT}}$ to be used as a temperature comparator, bit D0 (the $\overline{\text{ALERT}}$ configure bit) in the FILTER and ALERT CONFIGURE REGISTER (xBF) must be set high. This is not the power on default default state.

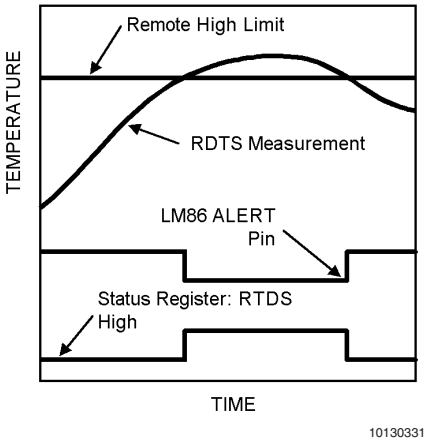

FIGURE 3. $\overline{\text{ALERT}}$ Comparator Temperature Response Diagram

1.2.2 $\overline{\text{ALERT}}$ Output as an Interrupt

The LM86's $\overline{\text{ALERT}}$ output can be implemented as a simple interrupt signal when it is used to trigger an interrupt service routine. In such systems it is undesirable for the interrupt flag to repeatedly trigger during or before the interrupt service routine has been completed. Under this method of operation, during a read of the STATUS REGISTER the LM86 will set the ALERT mask bit (D7 of the Configuration register) if any bit in the STATUS REGISTER is set, with the exception of Busy (D7) and OPEN (D2). This prevents further $\overline{\text{ALERT}}$ triggering until the master has reset the ALERT mask bit, at the end of the interrupt service routine. The STATUS REGISTER bits are cleared only upon a read command from the master (see *Figure 4*) and will be re-asserted at the end of the next conversion if the triggering condition(s) persist(s). In order for the $\overline{\text{ALERT}}$ to be used as a dedicated interrupt signal, bit D0 (the $\overline{\text{ALERT}}$ configure bit) in the FILTER and ALERT CONFIGURE REGISTER (xBF) must be set low. This is the power on default state.

The following sequence describes the response of a system that uses the $\overline{\text{ALERT}}$ output pin as a interrupt flag:

1. Master Senses $\overline{\text{ALERT}}$ low
2. Master reads the LM86 STATUS REGISTER to determine what caused the $\overline{\text{ALERT}}$
3. LM86 clears STATUS REGISTER, resets the $\overline{\text{ALERT}}$ HIGH and sets the ALERT mask bit (D7 in the Configuration register).
4. Master attends to conditions that caused the $\overline{\text{ALERT}}$ to be triggered. The fan is started, setpoint limits are adjusted, etc.
5. Master resets the $\overline{\text{ALERT}}$ mask (D7 in the Configuration register).

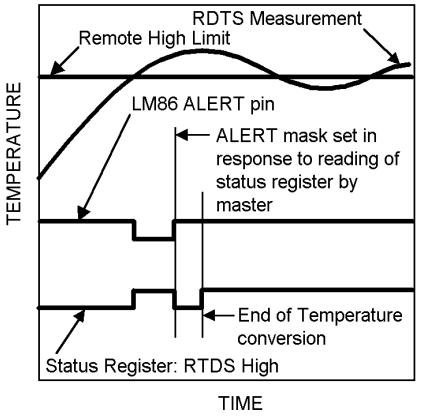

FIGURE 4. $\overline{\text{ALERT}}$ Output as an Interrupt Temperature Response Diagram

1.2.3 $\overline{\text{ALERT}}$ Output as an SMBus ALERT

When the $\overline{\text{ALERT}}$ output is connected to one or more $\overline{\text{ALERT}}$ outputs of other SMBus compatible devices and to a master, an SMBus alert line is created. Under this implementation, the LM86's $\overline{\text{ALERT}}$ should be operated using the ARA (Alert Response Address) protocol. The SMBus 2.0 ARA protocol, defined in the SMBus specification 2.0, is a procedure designed to assist the master in resolving which part generated an interrupt and service that interrupt while impeding system operation as little as possible.

The SMBus alert line is connected to the open-drain ports of all devices on the bus thereby AND'ing them together. The ARA is a method by which with one command the SMBus master may identify which part is pulling the SMBus alert line LOW and prevent it from pulling it LOW again for the same triggering condition. When an ARA command is received by all devices on the bus, the devices pulling the SMBus alert line LOW, first, send their address to the master and second, release the SMBus alert line after recognizing a successful transmission of their address.

The SMBus 1.1 and 2.0 specification state that in response to an ARA (Alert Response Address) "after acknowledging the slave address the device must disengage its $\overline{\text{SMBALERT}}$ pulldown". Furthermore, "if the host still sees $\overline{\text{SMBALERT}}$ low when the message transfer is complete, it knows to read the ARA again". This SMBus "disengaging of $\overline{\text{SMBALERT}}$" requirement prevents locking up the SMBus alert line. Competitive parts may address this "disengaging of $\overline{\text{SMBALERT}}$" requirement differently than the LM86 or not at all. SMBus systems that implement the ARA protocol as suggested for the LM86 will be fully compatible with all competitive parts.

The LM86 fulfills "disengaging of $\overline{\text{SMBALERT}}$" by setting the ALERT mask bit (bit D7 in the Configuration register, at address 09h) after successfully sending out its address in response to an ARA and releasing the $\overline{\text{ALERT}}$ output pin. Once the ALERT mask bit is activated, the $\overline{\text{ALERT}}$ output pin will be disabled until enabled by software. In order to enable the $\overline{\text{ALERT}}$ the master must read the STATUS REGISTER, at address 02h, during the interrupt service routine and then reset the ALERT mask bit in the Configuration register to 0 at the end of the interrupt service routine.

The following sequence describes the ARA response protocol.

1.0 Functional Description (Continued)

1. Master Senses SMBus alert line low
2. Master sends a START followed by the Alert Response Address (ARA) with a Read Command.
3. Alerting Device(s) send ACK.
4. Alerting Device(s) send their Address. While transmitting their address, alerting devices sense whether their address has been transmitted correctly. (The LM86 will reset its $\overline{\text{ALERT}}$ output and set the ALERT mask bit once its complete address has been transmitted successfully.)
5. Master/slave NoACK
6. Master sends STOP
7. Master attends to conditions that caused the $\overline{\text{ALERT}}$ to be triggered. The STATUS REGISTER is read and fan started, setpoint limits adjusted, etc.
8. Master resets the ALERT mask (D7 in the Configuration register).

The ARA, 000 1100, is a general call address. No device should ever be assigned this address.

Bit D0 (the $\overline{\text{ALERT}}$ configure bit) in the FILTER and ALERT CONFIGURE REGISTER (xBF) must be set low in order for the LM86 to respond to the ARA command.

The $\overline{\text{ALERT}}$ output can be disabled by setting the ALERT mask bit, D7, of the Configuration register. The power on default is to have the ALERT mask bit and the $\overline{\text{ALERT}}$ configure bit low.

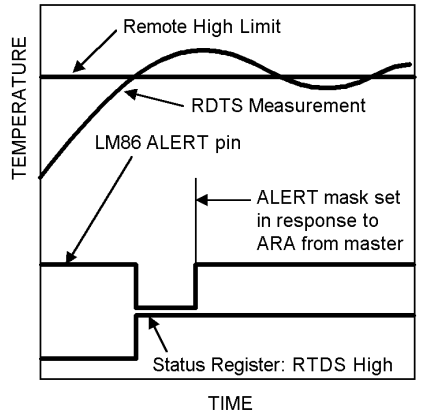

FIGURE 5. $\overline{\text{ALERT}}$ Output as an SMBus ALERT Temperature Response Diagram

1.3 $\overline{\text{T_CRIT_A}}$ OUTPUT and T_CRIT LIMIT

$\overline{\text{T_CRIT_A}}$ is activated when any temperature reading is greater than the limit preset in the critical temperature setpoint register (T_CRIT), as shown in *Figure 6*. The Status Register can be read to determine which event caused the alarm. A bit in the Status Register is set high to indicate which temperature reading exceeded the T_CRIT setpoint temperature and caused the alarm, see Section 2.3.

Local and remote temperature diodes are sampled in sequence by the A/D converter. The $\overline{\text{T_CRIT_A}}$ output and the Status Register flags are updated after every Local and Remote temperature conversion. $\overline{\text{T_CRT_A}}$ follows the state of the comparison, it is reset when the temperature falls below the setpoint RCS-TH. The Status Register flags are reset only after the Status Register is read and if a temperature conversion(s) is/are below the T_CRIT setpoint, as shown in . *Figure 6*

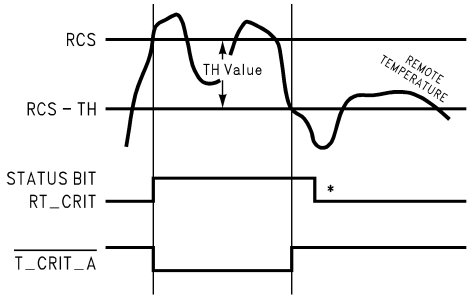

* Note: Status Register Bits are reset by a read of Status Register.

10130306

FIGURE 6. $\overline{\text{T_CRIT_A}}$ Temperature Response Diagram

1.4 POWER ON RESET DEFAULT STATES

LM86 always powers up to these known default states. The LM86 remains in these states until after the first conversion.

1. Command Register set to 00h
2. Local Temperature set to 0˚C
3. Remote Diode Temperature set to 0˚C until the end of the first conversion.
4. Status Register set to 00h.
5. Configuration register set to 00h; $\overline{\text{ALERT}}$ enabled, Remote T_CRIT alarm enabled and Local T_CRIT alarm enabled
6. 85˚C Local and Remote T_CRIT temperature setpoints
7. 70˚C Local and Remote HIGH temperature setpoints
8. 0˚C Local and Remote LOW temperature setpoints
9. Filter and Alert Configure Register set to 00h; filter disabled, $\overline{\text{ALERT}}$ output set as an SMBus ALERT
10. Conversion Rate Register set to 8h; conversion rate set to 16 conv./sec.

1.5 SMBus INTERFACE

The LM86 operates as a slave on the SMBus, so the SMBCLK line is an input and the SMBData line is bidirectional. The LM86 never drives the SMBCLK line and it does not support clock stretching. According to SMBus specifications, the LM86 has a 7-bit slave address. All bits A6 through A0 are internally programmed and can not be changed by software or hardware.

The complete slave address is:

A6	A5	A4	A3	A2	A1	A0
1	0	0	1	1	0	0

1.6 TEMPERATURE DATA FORMAT

Temperature data can only be read from the Local and Remote Temperature registers; the setpoint registers (T_CRIT, LOW, HIGH) are read/write.

Remote temperature data is represented by an 11-bit, two's complement word with an LSB (Least Significant Bit) equal to 0.125˚C. The data format is a left justified 16-bit word available in two 8-bit registers:

1.0 Functional Description (Continued)

Temperature	Digital Output	
	Binary	Hex
+125˚C	0111 1101 0000 0000	7D00h
+25˚C	0001 1001 0000 0000	1900h
+1˚C	0000 0001 0000 0000	0100h
+0.125˚C	0000 0000 0010 0000	0020h
0˚C	0000 0000 0000 0000	0000h
–0.125˚C	1111 1111 1110 0000	FFE0h
–1˚C	1111 1111 0000 0000	FF00h
–25˚C	1110 0111 0000 0000	E700h
–55˚C	1100 1001 0000 0000	C900h

Local Temperature data is represented by an 8-bit, two's complement byte with an LSB (Least Significant Bit) equal to 1˚C:

Temperature	Digital Output	
	Binary	Hex
+125˚C	0111 1101	7Dh
+25˚C	0001 1001	19h
+1˚C	0000 0001	01h
0˚C	0000 0000	00h
–1˚C	1111 1111	FFh
–25˚C	1110 0111	E7h
–55˚C	1100 1001	C9h

1.7 OPEN-DRAIN OUTPUTS

The SMBData, $\overline{\text{ALERT}}$ and $\overline{\text{T_CRIT_A}}$ outputs are open-drain outputs and do not have internal pull-ups. A "high" level will not be observed on these pins until pull-up current is provided by some external source, typically a pull-up resistor. Choice of resistor value depends on many system factors but, in general, the pull-up resistor should be as large as possible. This will minimize any internal temperature reading errors due to internal heating of the LM86. The maximum resistance of the pull-up to provide a 2.1V high level, based on LM86 specification for High Level Output Current with the supply voltage at 3.0V, is 82kΩ(5%) or 88.7kΩ(1%).

1.8 DIODE FAULT DETECTION

The LM86 is equipped with operational circuitry designed to detect fault conditions concerning the remote diode. In the event that the D+ pin is detected as shorted to V_{DD} or floating, the Remote Temperature High Byte (RTHB) register is loaded with +127˚C, the Remote Temperature Low Byte (RTLB) register is loaded with 0, and the OPEN bit (D2) in the status register is set. As a result, if the Remote T_CRIT setpoint register (RCS) is set to a value less than +127˚C the $\overline{\text{ALERT}}$ and T_Crit output pins will be pulled low, if the Alert Mask and T_Crit Mask are disabled. If the Remote HIGH Setpoint High Byte Register (RHSHB) is set to a value less than +127˚C then $\overline{\text{ALERT}}$ will be pulled low, if the Alert Mask is disabled. The OPEN bit itself will not trigger and ALERT.

In the event that the D+ pin is shorted to ground or D–, the Remote Temperature High Byte (RTHB) register is loaded with –128˚C (1000 0000) and the OPEN bit (D2) in the status register will not be set. Since operating the LM86 at –128˚C is beyond it's operational limits, this temperature reading represents this shorted fault condition. If the value in the Remote Low Setpoint High Byte Register (RLSHB) is more than –128˚C and the Alert Mask is disabled, $\overline{\text{ALERT}}$ will be pulled low.

Remote diode temperature sensors that have been previously released and are competitive with the LM86 output a code of 0˚C if the external diode is short-circuited. This change is an improvement that allows a reading of 0˚C to be truly interpreted as a genuine 0˚C reading and not a fault condition.

1.9 COMMUNICATING with the LM86

The data registers in the LM86 are selected by the Command Register. At power-up the Command Register is set to "00", the location for the Read Local Temperature Register. The Command Register latches the last location it was set to. Each data register in the LM86 falls into one of four types of user accessibility:

1. Read only
2. Write only
3. Read/Write same address
4. Read/Write different address

A **Write** to the LM86 will always include the address byte and the command byte. A write to any register requires one data byte.

Reading the LM86 can take place either of two ways:

1. If the location latched in the Command Register is correct (most of the time it is expected that the Command Register will point to one of the Read Temperature Registers because that will be the data most frequently read from the LM86), then the read can simply consist of an address byte, followed by retrieving the data byte.
2. If the Command Register needs to be set, then an address byte, command byte, repeat start, and another address byte will accomplish a read.

The data byte has the most significant bit first. At the end of a read, the LM86 can accept either acknowledge or No Acknowledge from the Master (No Acknowledge is typically used as a signal for the slave that the Master has read its last byte). It takes the LM86 31.25ms to measure the temperature of the remote diode and internal diode. When retrieving all 10 bits from a previous remote diode temperature measurement, the master must insure that all 10 bits are from the same temperature conversion. This may be achieved by using one-shot mode or by setting the conversion rate and monitoring the busy bit such that no conversion occurs in between reading the MSB and LSB of the last temperature conversion.

1.0 Functional Description (Continued)

1.9.1 SMBus Timing Diagrams

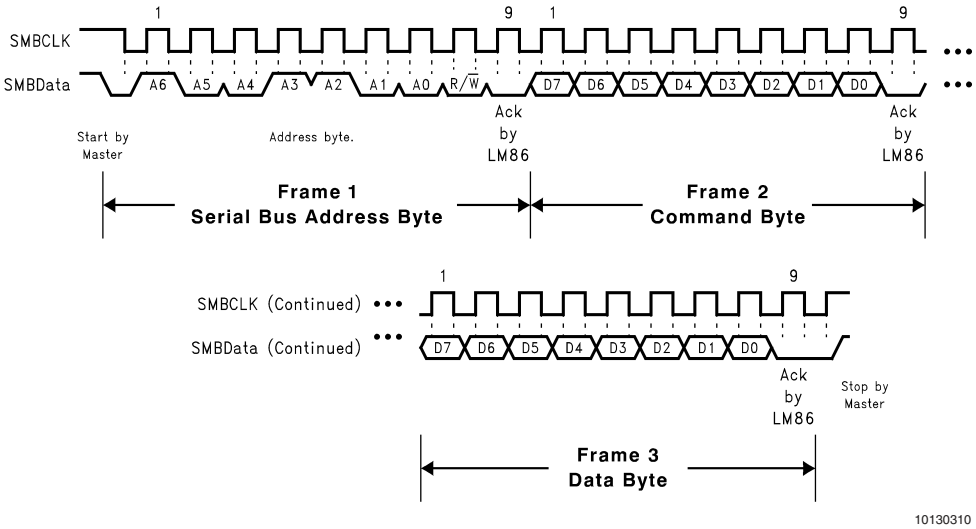

(a) Serial Bus Write to the internal Command Register followed by a the Data Byte

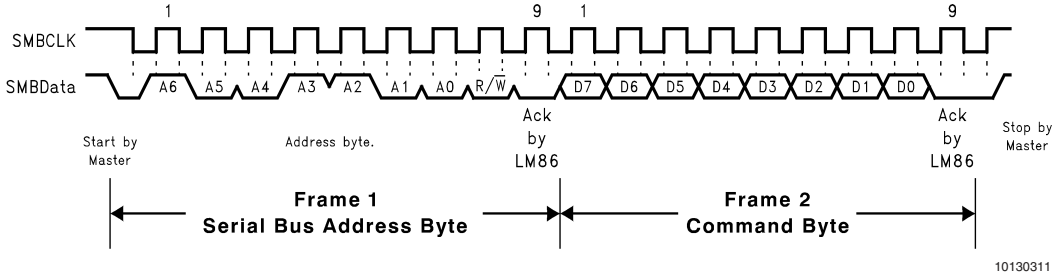

(b) Serial Bus Write to the Internal Command Register

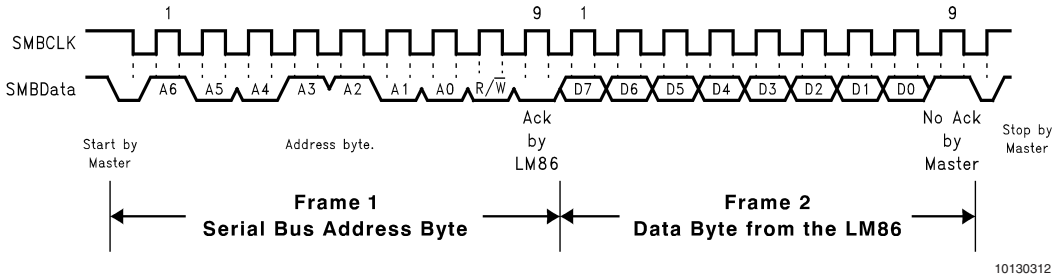

(c) Serial Bus Read from a Register with the Internal Command Register preset to desired value.

FIGURE 7. SMBus Timing Diagrams

1.10 SERIAL INTERFACE RESET

In the event that the SMBus Master is RESET while the LM86 is transmitting on the SMBData line, the LM86 must be returned to a known state in the communication protocol. This may be done in one of two ways:

1. When SMBData is LOW, the LM86 SMBus state machine resets to the SMBus idle state if either SMBData or SMBCLK are held low for more than 35ms ($t_{TIMEOUT}$). Note that according to SMBus specification 2.0 all devices are to timeout when either the SMBCLK or SMBData lines are held low for 25-35ms. Therefore, to insure a timeout of all devices on the bus the SMBCLK or SMBData lines must be held low for at least 35ms.
2. When SMBData is HIGH, have the master initiate an SMBus start. The LM86 will respond properly to an SMBus start condition at any point during the communication. After the start the LM86 will expect an SMBus Address address byte.

1.11 DIGITAL FILTER

In order to suppress erroneous remote temperature readings due to noise, the LM86 incorporates a user-configured digital filter. The filter is accessed in the FILTER and ALERT CONFIGURE REGISTER at BFh. The filter can be set according to the following table.

1.0 Functional Description (Continued)

D2	D1	Filter
0	0	No Filter
0	1	Level 1
1	0	Level 1
1	1	Level 2

Level 2 sets maximum filtering.

Figure 8 depict the filter output to in response to a step input and an impulse input. *Figure 9* depicts the digital filter in use in a Pentium 4 processor system. Note that the two curves, with filter and without, have been purposely offset so that both responses can be clearly seen. Inserting the filter does not induce an offset as shown.

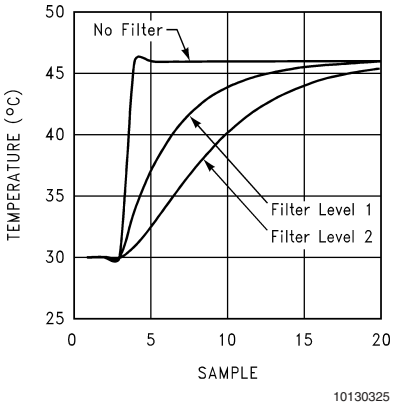

a)Step Response

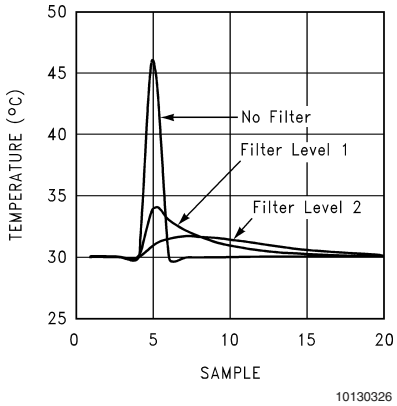

b)Impulse Response

FIGURE 8. Filter Output Response to a Step Input

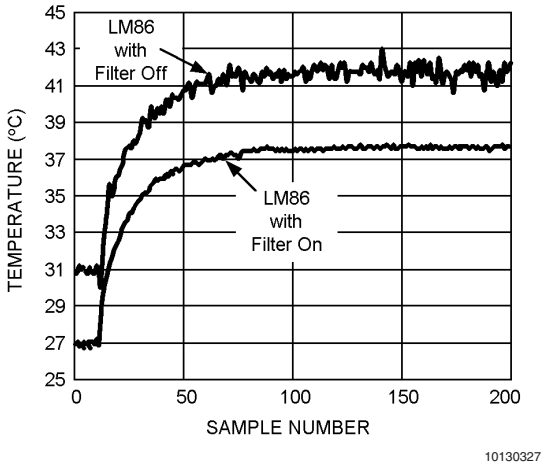

FIGURE 9. Digital Filter Response in a Pentium 4 processor System. The filter on and off curves were purposely offset to better show noise performance.

1.0 Functional Description (Continued)

1.12 Fault Queue

In order to suppress erroneous ALERT or T_CRIT triggering the LM86 incorporates a Fault Queue. The Fault Queue acts to insure a remote temperature measurement is genuinely beyond a HIGH, LOW or T_CRIT setpoint by not triggering until three consecutive out of limit measurements have been made, see *Figure 10*. The fault queue defaults off upon power-up and may be activated by setting bit D0 in the Configuration register (09h) to "1".

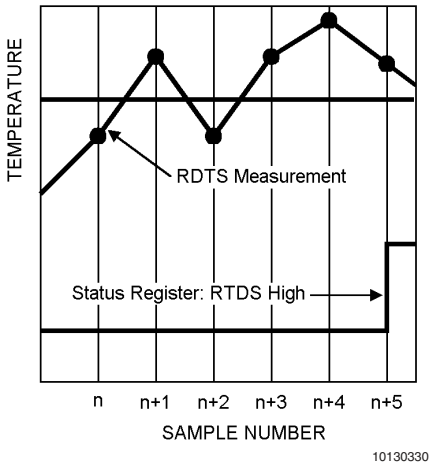

FIGURE 10. Fault Queue Temperature Response Diagram

1.13 One-Shot Register

The One-Shot register is used to initiate a single conversion and comparison cycle when the device is in standby mode, after which the device returns to standby. This is not a data register and it is the write operation that causes the one-shot conversion. The data written to this address is irrelevant and is not stored. A zero will always be read from this register.

2.0 LM86 REGISTERS

2.1 COMMAND REGISTER

Selects which registers will be read from or written to. Data for this register should be transmitted during the Command Byte of the SMBus write communication.

P7	P6	P5	P4	P3	P2	P1	P0
Command Select							

P0-P7: Command Select

Command Select Address		Power On Default State		Register Name	Register Function
Read Address <P7:P0> hex	Write Address <P7:P0> hex	<D7:D0> binary	<D7:D0> decimal		
00h	NA	0000 0000	0	LT	Local Temperature
01h	NA	0000 0000	0	RTHB	Remote Temperature High Byte
02h	NA	0000 0000	0	SR	Status Register
03h	09h	0000 0000	0	C	Configuration
04h	0Ah	0000 1000	8 (16 conv./sec)	CR	Conversion Rate
05h	0Bh	0100 0110	70	LHS	Local HIGH Setpoint
06h	0Ch	0000 0000	0	LLS	Local LOW Setpoint
07h	0Dh	0100 0110	70	RHSHB	Remote HIGH Setpoint High Byte
08h	0Eh	0000 0000	0	RLSHB	Remote LOW Setpoint High Byte
NA	0Fh			One Shot	Writing to this register will initiate a one shot conversion
10h	NA	0000 0000	0	RTLB	Remote Temperature Low Byte

2.0 LM86 REGISTERS (Continued)

Command Select Address		Power On Default State		Register Name	Register Function
Read Address <P7:P0> hex	Write Address <P7:P0> hex	<D7:D0> binary	<D7:D0> decimal		
11h	11h	0000 0000	0	RTOHB	Remote Temperature Offset High Byte
12h	12h	0000 0000	0	RTOLB	Remote Temperature Offset Low Byte
13h	13h	0000 0000	0	RHSLB	Remote HIGH Setpoint Low Byte
14h	14h	0000 0000	0	RLSLB	Remote LOW Setpoint Low Byte
19h	19h	0101 0101	85	RCS	Remote T_CRIT Setpoint
20h	20h	0101 0101	85	LCS	Local T_CRIT Setpoint
21h	21h	0000 1010	10	TH	T_CRIT Hysteresis
B0h-BEh	B0h-BEh				Manufacturers Test Registers
BFh	BFh	0000 0000	0	RDTF	Remote Diode Temperature Filter
FEh	NA	0000 0001	1	RMID	Read Manufacturer's ID
FFh	NA	0001 0001	17	RDR	Read Stepping or Die Revision Code

2.2 LOCAL and REMOTE TEMPERATURE REGISTERS (LT, RTHB, RTLB)

(Read Only Address 00h, 01h):

BIT	D7	D6	D5	D4	D3	D2	D1	D0
Value	SIGN	64	32	16	8	4	2	1

For LT and RTHB D7–D0: Temperature Data. LSB = 1˚C. Two's complement format.

(Read Only Address 10h):

BIT	D7	D6	D5	D4	D3	D2	D1	D0
Value	0.5	0.25	0.125	0	0	0	0	0

For RTLB D7–D5: Temperature Data. LSB = 0.125˚C. Two's complement format.

The maximum value available from the Local Temperature register is 127; the minimum value available from the Local Temperature register is -128. The maximum value available from the Remote Temperature register is 127.875; the minimum value available from the Remote Temperature registers is –128.875.

2.3 STATUS REGISTER (SR)

(Read Only Address 02h):

D7	D6	D5	D4	D3	D2	D1	D0
Busy	LHIGH	LLOW	RHIGH	RLOW	OPEN	RCRIT	LCRIT

Power up default is with all bits "0" (zero).

D0: LCRIT: When set to "1" indicates a Local Critical Temperature alarm.

D1: RCRIT: When set to "1" indicates a Remote Diode Critical Temperature alarm.

D2: OPEN: When set to "1" indicates a Remote Diode disconnect.

D3: RLOW: When set to "1" indicates a Remote Diode LOW Temperature alarm

D4: RHIGH: When set to "1" indicates a Remote Diode HIGH Temperature alarm.

D5: LLOW: When set to "1" indicates a Local LOW Temperature alarm.

D6: LHIGH: When set to "1" indicates a Local HIGH Temperature alarm.

D7: Busy: When set to "1" ADC is busy converting.

2.0 LM86 REGISTERS (Continued)

2.4 CONFIGURATION REGISTER

(Read Address 03h /Write Address 09h):

D7	D6	D5	D4	D3	D2	D1	D0
$\overline{\text{ALERT}}$ mask	$\overline{\text{RUN}}$/STOP	0	Remote $\overline{\text{T_CRIT_A}}$ mask	0	Local $\overline{\text{T_CRIT_A}}$ mask	0	Fault Queue

Power up default is with all bits “0” (zero)

D7: $\overline{\text{ALERT}}$ mask: When set to “1” $\overline{\text{ALERT}}$ interrupts are masked.

D6: RUN/STOP: When set to “1” SHUTDOWN is enabled.

D5: is not defined and defaults to “0”.

D4: Remote T_CRIT mask: When set to “1” a diode temperature reading that exceeds T_CRIT setpoint will not activate the $\overline{\text{T_CRIT_A}}$ pin.

D3: is not defined and defaults to “0”.

D2: Local T_CRIT mask: When set to “1” a Local temperature reading that exceeds T_CRIT setpoint will not activate the $\overline{\text{T_CRIT_A}}$ pin.

D1: is not defined and defaults to “0”.

D0: Fault Queue: when set to “1” three consecutive remote temperature measurements outside the HIGH, LOW, or T_CRIT setpoints will trigger an “Outside Limit” condition resulting in setting of status bits and associated output pins..

2.5 CONVERSION RATE REGISTER

(Read Address 04h /Write Address 0Ah)

Value	Conversion Rate
00	62.5 mHz
01	125 mHz
02	250 mHz
03	500 mHz
04	1 Hz
05	2 Hz

(Read Address 04h /Write Address 0Ah)

Value	Conversion Rate
06	4 Hz
07	8 Hz
08	16 Hz
09	32 Hz
10-255	Undefined

2.6 LOCAL and REMOTE HIGH SETPOINT REGISTERS (LHS, RHSHB, and RHSLB)

(Read Address 05h, 07h /Write Address 0Bh, 0Dh):

BIT	D7	D6	D5	D4	D3	D2	D1	D0
Value	SIGN	64	32	16	8	4	2	1

For LHS and RHSHB: HIGH setpoint temperature data. Power up default is LHIGH = RHIGH = 70˚C. 1LSB = 1˚C. Two’s complement format.

(Read/Write Address 13h):

BIT	D7	D6	D5	D4	D3	D2	D1	D0
Value	0.5	0.25	0.125	0	0	0	0	0

For RHSLB: Remote HIGH Setpoint Low Byte temperature data. Power up default is 0˚C. 1LSB = 0.125˚C. Two’s complement format.

2.7 LOCAL and REMOTE LOW SETPOINT REGISTERS (LLS, RLSHB, and RLSLB)

(Read Address 06h, 08h, /Write Address 0Ch, 0Eh):

BIT	D7	D6	D5	D4	D3	D2	D1	D0
Value	SIGN	64	32	16	8	4	2	1

For LLS and RLSHB: HIGH setpoint temperature data. Power up default is LHIGH = RHIGH = 0˚C. 1LSB = 1˚C. Two’s complement format.

(Read/Write Address 14h):

BIT	D7	D6	D5	D4	D3	D2	D1	D0
Value	0.5	0.25	0.125	0	0	0	0	0

2.0 LM86 REGISTERS (Continued)

For RLSLB: Remote HIGH Setpoint Low Byte temperature data. Power up default is 0˚C. 1LSB = 0.125˚C. Two's complement format.

2.8 REMOTE TEMPERATURE OFFSET REGISTERS (RTOHB and RTOLB)

(Read/Write Address 11h):

BIT	D7	D6	D5	D4	D3	D2	D1	D0
Value	SIGN	64	32	16	8	4	2	1

For RTOHB: Remote Temperature Offset High Byte. Power up default is LHIGH = RHIGH = 0˚C. 1LSB = 1˚C. Two's complement format.

(Read/Write Address 12h):

BIT	D7	D6	D5	D4	D3	D2	D1	D0
Value	0.5	0.25	0.125	0	0	0	0	0

For RTOLB: Remote Temperature Offset High Byte. Power up default is 0˚C. 1LSB = 0.125˚C. Two's complement format.

The offset value written to these registers will automatically be added to or subtracted from the remote temperature measurement that will be reported in the Remote Temperature registers.

2.9 LOCAL and REMOTE T_CRIT REGISTERS (RCS and LCS)

(Read/Write Address 20h, 19h):

BIT	D7	D6	D5	D4	D3	D2	D1	D0
Value	SIGN	64	32	16	8	4	2	1

D7–D0: T_CRIT setpoint temperature data. Power up default is T_CRIT = 85˚C. 1 LSB = 1˚C, two's complement format.

2.10 T_CRIT HYSTERESIS REGISTER (TH)

(Read and Write Address 21h):

BIT	D7	D6	D5	D4	D3	D2	D1	D0
Value				16	8	4	2	1

D7–D0: T_CRIT Hysteresis temperature. Power up default is TH = 10˚C. 1 LSB = 1˚C, maximum value = 31.

2.11 FILTER and ALERT CONFIGURE REGISTER

(Read and Write Address BFh):

BIT	D7	D6	D5	D4	D3	D2	D1	D0
Value	0	0	0	0	0	Filter Level		$\overline{\text{ALERT}}$ Configure

D7-D3: is not defined defaults to "0".

D2-D1: input filter setting as defined the table below:

D2	D1	Filter Level
0	0	No Filter
0	1	Level 1
1	0	Level 1
1	1	Level 2

Level 2 sets maximum filtering.

D0: when set to "1" comparator mode is enabled.

2.12 MANUFACTURERS ID REGISTER

(Read Address FEh) Default value 01h.

2.13 DIE REVISION CODE REGISTER

(Read Address FFh) Default value 11hexadecimal or 17 decimal. This register will increment by 1 every time there is a revision to the die by National Semiconductor.

3.0 Application Hints

The LM86 can be applied easily in the same way as other integrated-circuit temperature sensors, and its remote diode sensing capability allows it to be used in new ways as well. It can be soldered to a printed circuit board, and because the path of best thermal conductivity is between the die and the

3.0 Application Hints (Continued)

pins, its temperature will effectively be that of the printed circuit board lands and traces soldered to the LM86's pins. This presumes that the ambient air temperature is almost the same as the surface temperature of the printed circuit board; if the air temperature is much higher or lower than the surface temperature, the actual temperature of the of the LM86 die will be at an intermediate temperature between the surface and air temperatures. Again, the primary thermal conduction path is through the leads, so the circuit board temperature will contribute to the die temperature much more strongly than will the air temperature.

To measure temperature external to the LM86's die, use a remote diode. This diode can be located on the die of a target IC, allowing measurement of the IC's temperature, independent of the LM86's temperature. The LM86 has been optimized to measure the remote diode of a Pentium III processor as shown in *Figure 11*. A discrete diode can also be used to sense the temperature of external objects or ambient air. Remember that a discrete diode's temperature will be affected, and often dominated, by the temperature of its leads.

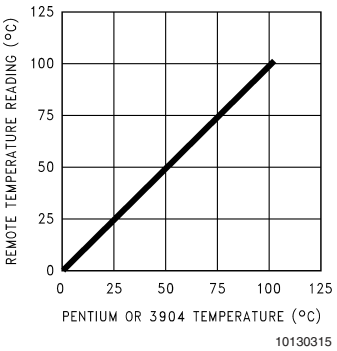

Mobile Pentium III or 3904 Temperature vs LM86 Temperature Reading

FIGURE 11.

Most silicon diodes do not lend themselves well to this application. It is recommended that a 2N3904 transistor base emitter junction be used with the collector tied to the base.

A diode connected 2N3904 approximates the junction available on a Pentium III microprocessor for temperature measurement. Therefore, the LM86 can sense the temperature of this diode effectively.

3.1 DIODE NON-IDEALITY

3.1.1 Diode Non-Ideality Factor Effect on Accuracy

When a transistor is connected as a diode, the following relationship holds for variables V_{BE}, T and I_f:

$$I_F = I_S \left[e^{\frac{V_{be}}{\eta V_t}} - 1 \right]$$

where:

$$V_t = \frac{k\,T}{q}$$

- q = 1.6×10^{-19} Coulombs (the electron charge),
- T = Absolute Temperature in Kelvin
- k = 1.38×10^{-23}joules/K (Boltzmann's constant),
- η is the non-ideality factor of the process the diode is manufactured on,
- I_S = Saturation Current and is process dependent,
- I_f= Forward Current through the base emitter junction
- V_{BE} = Base Emitter Voltage drop

In the active region, the -1 term is negligible and may be eliminated, yielding the following equation

$$I_F = I_S \left[e^{\frac{V_{be}}{\eta V_t}} \right]$$

In the above equation, η and I_S are dependant upon the process that was used in the fabrication of the particular diode. By forcing two currents with a very controlled ration (N) and measuring the resulting voltage difference, it is possible to eliminate the I_S term. Solving for the forward voltage difference yields the relationship:

$$V_{be} = \eta \frac{k\,T}{q} \ln (N)$$

The non-ideality factor, η, is the only other parameter not accounted for and depends on the diode that is used for measurement. Since ΔV_{BE} is proportional to both η and T, the variations in η cannot be distinguished from variations in temperature. Since the non-ideality factor is not controlled by the temperature sensor, it will directly add to the inaccuracy of the sensor. For the Pentium III Intel specifies a ±1% variation in η from part to part. As an example, assume a temperature sensor has an accuracy specification of ±1˚C at room temperature of 25 ˚C and the process used to manufacture the diode has a non-ideality variation of ±1%. The resulting accuracy of the temperature sensor at room temperature will be:

$$T_{ACC} = \pm 1^{\circ}C + (\pm 1\% \text{ of } 298\ ^{\circ}K) = \pm 4\ ^{\circ}C$$

The additional inaccuracy in the temperature measurement caused by η, can be eliminated if each temperature sensor is calibrated with the remote diode that it will be paired with. The following table shows the variations in non-ideality for a variety of processors.

Processor Family	**η, non-ideality**		
	min	**typ**	**max**
Pentium II	1	1.0065	1.0173
Pentium III CPUID 67h	1	1.0065	1.0125
Pentium III CPUID 68h/PGA370Socket/Celeron	1.0057	1.008	1.0125
Pentium 4, 423 pin	0.9933	1.0045	1.0368
Pentium 4, 478 pin	0.9933	1.0045	1.0368
MMBT3904		1.003	
AMD Athlon MP model 6	1.002	1.008	1.016

3.1.2 Compensating for Diode Non-Ideality

In order to compensate for the errors introduced by non-ideality, the temperature sensor is calibrated for a particular processor. National Semiconductor temperature sensors are always calibrated to the typical non-ideality of a given processor type. The LM86 is calibrated for the non-ideality of a

3.0 Application Hints (Continued)

mobile Pentium III processor, 1.008. When a temperature sensor calibrated for a particular processor type is used with a different processor type or a given processor type has a non-ideality that strays from the typical, errors are introduced. *Figure 12* shows the minimum and maximum errors introduced to a temperature sensor calibrated specifically to the typical value of the processor type it is connected to. The errors in this figure are attributed only to the variation in non-ideality from the typical value. In *Figure 13* is a plot of the errors that result from using a temperature sensor calibrated for a Pentium II, the LM84, with a typical Pentium 4 or AMD Athlon MP Model 6.

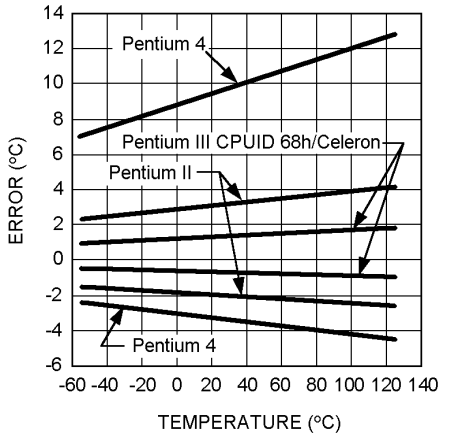

10130337

Error Caused by Non-Ideality Factor

FIGURE 12.

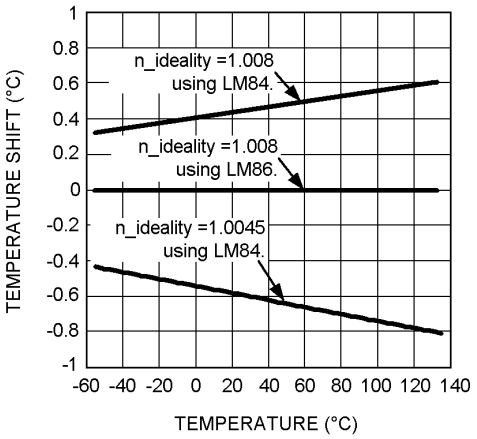

10130336

Errors Induced when Temperature Sensor is Not Calibrated to Typical Non-Ideality

FIGURE 13.

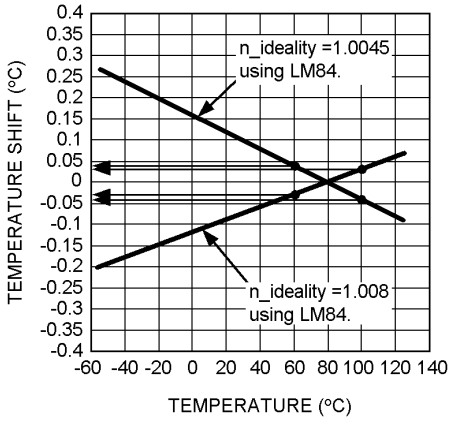

10130338

Compensating for an Untargeted Non-Ideality Factor

FIGURE 14.

Temperature errors associated with non-ideality may be reduced in a specific temperature range of concern through use of the offset registers (11h and 12h). *Figure 14* shows how the offset register may be used to compensate for the non-ideality errors shown in *Figure 13*. For the case of non-ideality=1.008, the offset register was set to –0.5˚C resulting in the calculated residual error as shown in *Figure 14*. This offset has resulted in an error of less than 0.05˚C for the temperatures measured in the critical range between 60 to 100˚C. This method yeilds a first order correction factor.

Please send an email to hardware.monitor.team@nsc.com requesting further information on our recommended setting of the offset register for different processor types.

3.0 Application Hints (Continued)

3.2 PCB LAYOUT for MINIMIZING NOISE



FIGURE 15. Ideal Diode Trace Layout

In a noisy environment, such as a processor mother board, layout considerations are very critical. Noise induced on traces running between the remote temperature diode sensor and the LM86 can cause temperature conversion errors. Keep in mind that the signal level the LM86 is trying to measure is in microvolts. The following guidelines should be followed:

1. Place a 0.1 µF power supply bypass capacitor as close as possible to the V_{DD}pin and the recommended 2.2 nF capacitor as close as possible to the LM86's D+ and D– pins. Make sure the traces to the 2.2nF capacitor are matched.
2. The recommended 2.2nF diode bypass capacitor actually has a range of TBDpF to 3.3nF. The average temperature accuracy will not degrade. Increasing the capacitance will lower the corner frequency where differential noise error affects the temperature reading thus producing a reading that is more stable. Conversely, lowering the capacitance will increase the corner frequency where differential noise error affects the temperature reading thus producing a reading that is less stable.
3. Ideally, the LM86 should be placed within 10cm of the Processor diode pins with the traces being as straight, short and identical as possible. Trace resistance of 1Ω can cause as much as 1˚C of error. This error can be compensated by using the Remote Temperature Offset Registers, since the value placed in these registers will automatically be subtracted from or added to the remote temperature reading.
4. Diode traces should be surrounded by a GND guard ring to either side, above and below if possible. This GND guard should not be between the D+ and D– lines. In the event that noise does couple to the diode lines it would be ideal if it is coupled common mode. That is equally to the D+ and D– lines.
5. Avoid routing diode traces in close proximity to power supply switching or filtering inductors.
6. Avoid running diode traces close to or parallel to high speed digital and bus lines. Diode traces should be kept at least 2cm apart from the high speed digital traces.
7. If it is necessary to cross high speed digital traces, the diode traces and the high speed digital traces should cross at a 90 degree angle.
8. The ideal place to connect the LM86's GND pin is as close as possible to the Processors GND associated with the sense diode.
9. Leakage current between D+ and GND should be kept to a minimum. One nano-ampere of leakage can cause as much as 1˚C of error in the diode temperature reading. Keeping the printed circuit board as clean as possible will minimize leakage current.

Noise coupling into the digital lines greater than 400mVp-p (typical hysteresis) and undershoot less than 500mV below GND, may prevent successful SMBus communication with the LM86. SMBus no acknowledge is the most common symptom, causing unnecessary traffic on the bus. Although the SMBus maximum frequency of communication is rather low (100kHz max), care still needs to be taken to ensure proper termination within a system with multiple parts on the bus and long printed circuit board traces. An RC lowpass filter with a 3db corner frequency of about 40MHz is included on the LM86's SMBCLK input. Additional resistance can be added in series with the SMBData and SMBCLK lines to further help filter noise and ringing. Minimize noise coupling by keeping digital traces out of switching power supply areas as well as ensuring that digital lines containing high speed data communications cross at right angles to the SMBData and SMBCLK lines.

4.0 Data Sheet Revision History

Date	Revision
4/2003	1. Added improved guaranteed Temperature Error specification for the Remote Diode Readings of ±0.75°C to page 1 and Electrical Characteristics. 2. in Section 2.13 changed "21h" to "11hexadecimal or 17 decimal" 3. Changed numbering of "Applications Hints" from "4." to "3." 4. Added "4.0 Data Sheet Revision History" section.

Physical Dimensions inches (millimeters)

unless otherwise noted

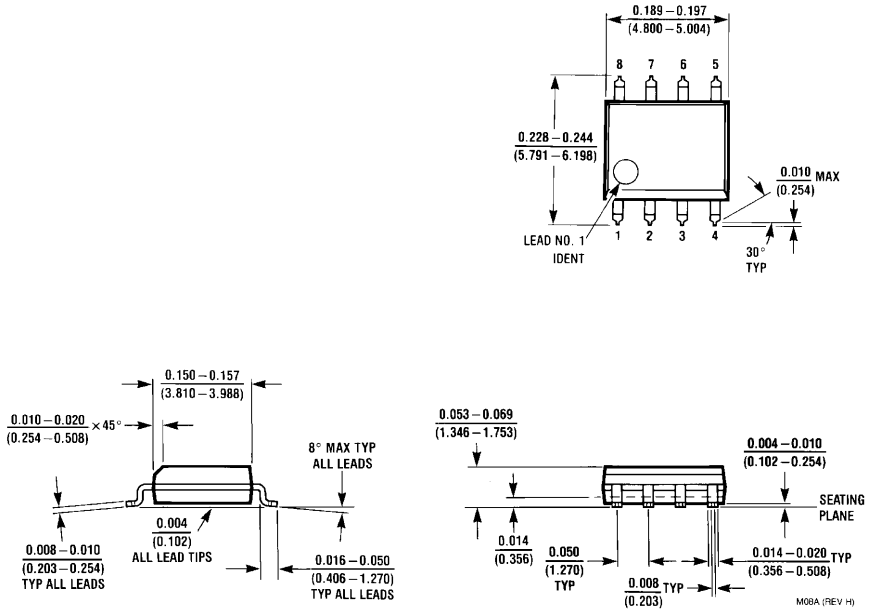

8-Lead (0.150" Wide) Molded Narrow Small-Outline Package (SOIC),
JEDEC Registration Number MS-012
Order Number LM86CIM or LM86CIMX
NS Package Number M08A

Physical Dimensions inches (millimeters) unless otherwise noted (Continued)

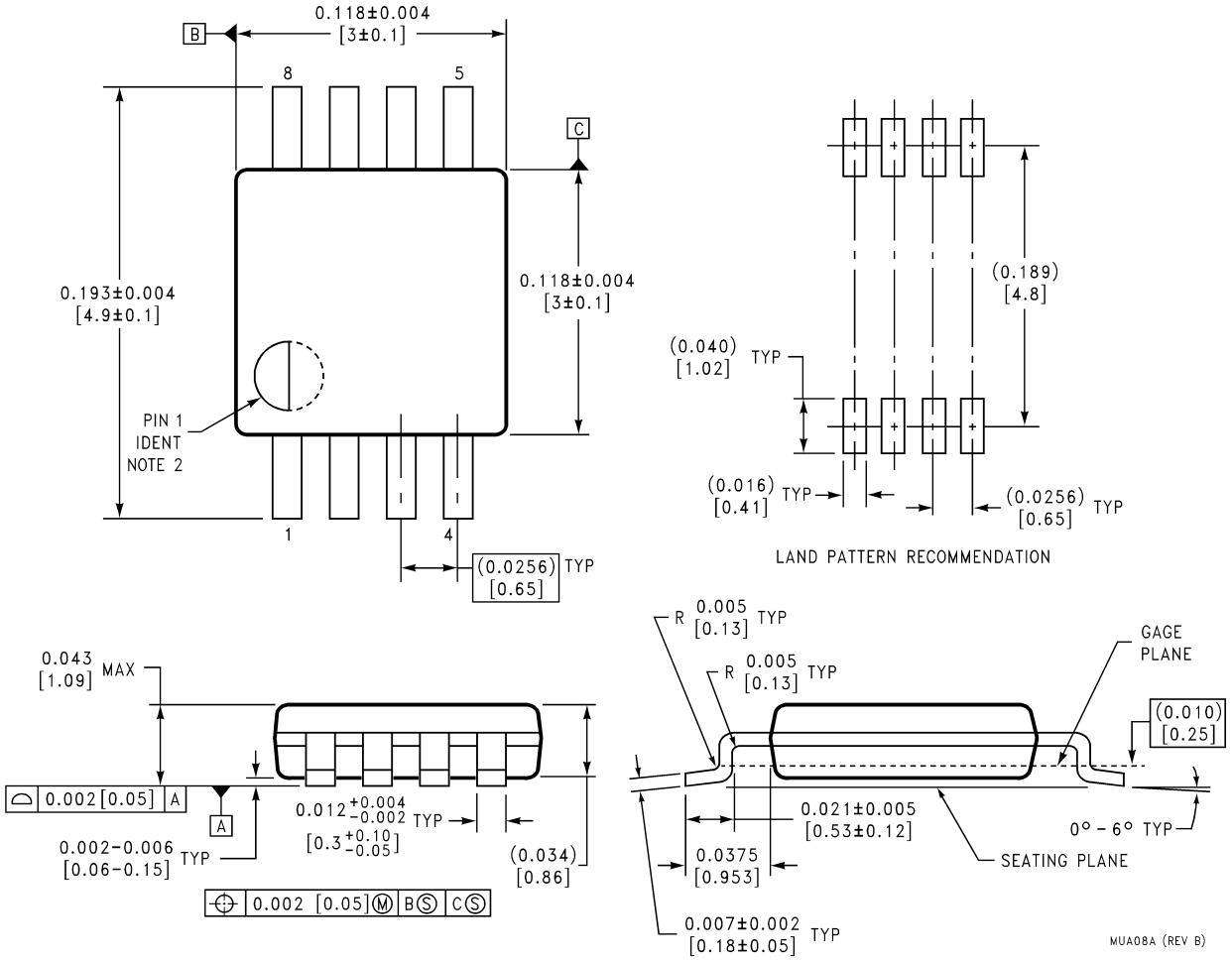

8-Lead Molded Mini-Small-Outline Package (MSOP),
JEDEC Registration Number MO-187
Order Number LM86CIMM or LM86CIMMX
NS Package Number MUA08A

LIFE SUPPORT POLICY

NATIONAL'S PRODUCTS ARE NOT AUTHORIZED FOR USE AS CRITICAL COMPONENTS IN LIFE SUPPORT DEVICES OR SYSTEMS WITHOUT THE EXPRESS WRITTEN APPROVAL OF THE PRESIDENT AND GENERAL COUNSEL OF NATIONAL SEMICONDUCTOR CORPORATION. As used herein:

1. Life support devices or systems are devices or systems which, (a) are intended for surgical implant into the body, or (b) support or sustain life, and whose failure to perform when properly used in accordance with instructions for use provided in the labeling, can be reasonably expected to result in a significant injury to the user.
2. A critical component is any component of a life support device or system whose failure to perform can be reasonably expected to cause the failure of the life support device or system, or to affect its safety or effectiveness.

National Semiconductor
Americas Customer
Support Center
Email: new.feedback@nsc.com
Tel: 1-800-272-9959

www.national.com

National Semiconductor
Europe Customer Support Center
Fax: +49 (0) 180-530 85 86
Email: europe.support@nsc.com
Deutsch Tel: +49 (0) 69 9508 6208
English Tel: +44 (0) 870 24 0 2171
Français Tel: +33 (0) 1 41 91 8790

National Semiconductor
Asia Pacific Customer
Support Center
Email: ap.support@nsc.com

National Semiconductor
Japan Customer Support Center
Fax: 81-3-5639-7507
Email: jpn.feedback@nsc.com
Tel: 81-3-5639-7560

National does not assume any responsibility for use of any circuitry described, no circuit patent licenses are implied and National reserves the right at any time without notice to change said circuitry and specifications.