LM809/LM810 3-Pin Microprocessor Reset Circuits

1 Features

- Precision Monitoring of Supply Voltages
  - Available Threshold Options: 2.63 V, 2.93 V, 3.08 V, 4.38 V, 4.63 V
- Superior Upgrade to MAX809 and MAX810
- Fully Specified Over Temperature
- 140-ms Minimum Power-On Reset Pulse Width, 240-ms Typical
  - Active-Low $\overline{\text{RESET}}$ Output (LM809)
  - Active-High RESET Output (LM810)
- Ensured RESET Output Valid for $V_{CC} \geq 1$ V
- Low Supply Current, 15-µA Typical
- Power Supply Transient Immunity

2 Applications

- Factory Automation
- Building Automation
- Programmable Logic Control
- Renewable Energy
- Microprocessor Systems
- Computers
- Controllers
- Intelligent Instruments
- Portable/Battery-Powered Equipment
- Automotive

3 Description

The LM809 and LM810 microprocessors supervisory circuits can be used to monitor the power supplies in microprocessor and digital systems. They provide a reset to the microprocessor during power-up, power-down and brown-out conditions.

The function of the LM809 and LM810 are to monitor the V_{CC} supply voltage, and assert a reset signal whenever this voltage declines below the factory-programmed reset threshold. The reset signal remains asserted for 240 ms after V_{CC} rises above the threshold. The LM809 has an active-low $\overline{\text{RESET}}$ output, while the LM810 has an active-high RESET output.

Seven standard reset voltage options are available, suitable for monitoring 5-V, 3.3-V, and 3-V supply voltages.

With a low supply current of only 15 µA, the LM809 and LM810 are ideal for use in portable equipment.

Device Information[1]

PART NUMBER	PACKAGE	BODY SIZE (NOM)
LM809, LM810	SOT-23 (3)	2.92 mm × 1.30 mm

(1) For all available packages, see the orderable addendum at the end of the data sheet.

Typical Application for Microprocessor Reset Circuit

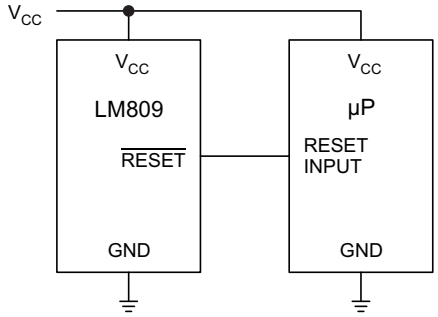

An IMPORTANT NOTICE at the end of this data sheet addresses availability, warranty, changes, use in safety-critical applications, intellectual property matters and other important disclaimers. PRODUCTION DATA.

Table of Contents

1 Features ... 1
2 Applications ... 1
3 Description ... 1
4 Revision History ... 2
5 Pin Configuration and Functions ... 3
6 Specifications ... 4
6.1 Absolute Maximum Ratings ... 4
6.2 ESD Ratings ... 4
6.3 Recommended Operating Conditions ... 4
6.4 Thermal Information ... 4
6.5 Electrical Characteristics ... 5
6.6 Typical Characteristics ... 6
7 Detailed Description ... 7
7.1 Overview ... 7
7.2 Functional Block Diagram ... 7
7.3 Feature Description ... 7
7.4 Device Functional Modes ... 9
8 Application and Implementation ... 10
8.1 Application Information ... 10
8.2 Typical Application ... 10
9 Power Supply Recommendations ... 11
10 Layout ... 11
10.1 Layout Guidelines ... 11
10.2 Layout Example ... 11
11 Device and Documentation Support ... 12
11.1 Related Links ... 12
11.2 Community Resources ... 12
11.3 Trademarks ... 12
11.4 Electrostatic Discharge Caution ... 12
11.5 Glossary ... 12
12 Mechanical, Packaging, and Orderable Information ... 12

4 Revision History

NOTE: Page numbers for previous revisions may differ from page numbers in the current version.

Changes from Revision D (May 2013) to Revision E	Page
• Removed the SON package.	1
• Added *ESD Ratings* table, *Feature Description* section, *Device Functional Modes*, *Application and Implementation* section, *Power Supply Recommendations* section, *Layout* section, *Device and Documentation Support* section, and *Mechanical, Packaging, and Orderable Information* section.	1

Copyright © 1999–2016, Texas Instruments Incorporated

5 Pin Configuration and Functions

LM809
DBZ Package
3-Pin SOT-23
Top View

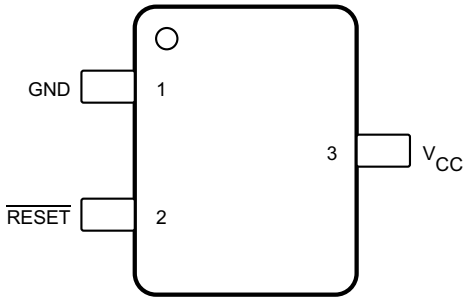

LM810
DBZ Package
3-Pin SOT-23
Top View

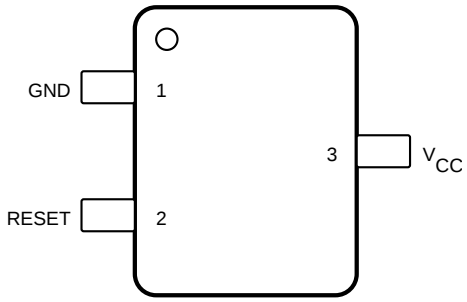

Pin Functions

PIN			I/O	DESCRIPTION
NAME	NO.			
	LM809	LM810		
$\overline{RESET}$	2	—	O	Active-low output. $\overline{RESET}$ remains low while V_{CC} is below the reset threshold, and for 240 ms after V_{CC} rises above the reset threshold.
RESET	—	2	O	Active-high output. RESET remains high while V_{CC} is below the reset threshold, and for 240 ms after V_{CC} rises above the reset threshold.
V_{CC}	3	3	I	Supply voltage
GND	1	1	—	Ground reference

Copyright © 1999–2016, Texas Instruments Incorporated

6 Specifications

6.1 Absolute Maximum Ratings

see (1)(2)

		MIN	MAX	UNIT
Input supply voltage	V_{CC}	–0.3	6	V
Output voltage	RESET, $\overline{\text{RESET}}$	–0.3	V_{CC} + 0.3	V
Input current	V_{CC}		20	mA
Output current	RESET, $\overline{\text{RESET}}$		20	mA
Rate of rise	V_{CC}		100	V/µs
Continuous power dissipation			320	mW
Lead temperature (soldering, 10 s)			300	°C
Ambient temperature range, T_A		–40	105	°C
Maximum junction temperature, $T_{J(MAX)}$			125	°C
Storage temperature, T_{stg}		–65	160	°C

(1) Stresses beyond those listed under *Absolute Maximum Ratings* may cause permanent damage to the device. These are stress ratings only, which do not imply functional operation of the device at these or any other conditions beyond those indicated under *Recommended Operating Conditions*. Exposure to absolute-maximum-rated conditions for extended periods may affect device reliability.
(2) If Military/Aerospace specified devices are required, please contact the Texas Instruments Sales Office/Distributors for availability and specifications.

6.2 ESD Ratings

			VALUE	UNIT
$V_{(ESD)}$	Electrostatic discharge	Human-body model (HBM), per ANSI/ESDA/JEDEC JS-001 (1)	±2000	V
		Charged-device model (CDM), per JEDEC specification JESD22-C101 (2)	±200	

(1) JEDEC document JEP155 states that 500-V HBM allows safe manufacturing with a standard ESD control process. Manufacturing with less than 500-V HBM is possible with the necessary precautions. Pins listed as ±2000 V may actually have higher performance.
(2) JEDEC document JEP157 states that 250-V CDM allows safe manufacturing with a standard ESD control process. Manufacturing with less than 250-V CDM is possible with the necessary precautions. Pins listed as ±200 V may actually have higher performance.

6.3 Recommended Operating Conditions

over operating free-air temperature range (unless otherwise noted)

				MIN	NOM	MAX	UNIT
V_{CC}	Input voltage range		T_A = 0°C to 70°C	1.0		5.5	V
			T_A = –40°C to 105°C	1.2		5.5	
I_{CC}	Supply Current	V_{CC} < 5.5 V, LM8xx: 4.63, 4.38, 4.00	T_A = –40°C to 85°C		18	60	µA
			T_A = 85°C to 105°C			100	
		V_{CC} < 3.6 V, LM8xx: 3.08, 2.93, 2.63, 2.45	T_A = –40°C to 85°C		15	50	
			T_A = 85°C to 105°C			100	

6.4 Thermal Information

THERMAL METRIC (1)		LM809, LM810 DBZ (SOT-23) 3 PINS	UNIT
$R_{\theta JA}$	Junction-to-ambient thermal resistance	252.0	°C/W
$R_{\theta JC(top)}$	Junction-to-case (top) thermal resistance	113.3	°C/W
$R_{\theta JB}$	Junction-to-board thermal resistance	53.5	°C/W
ψ_{JT}	Junction-to-top characterization parameter	9.9	°C/W
ψ_{JB}	Junction-to-board characterization parameter	52.6	°C/W
$R_{\theta JC(bot)}$	Junction-to-case (bottom) thermal resistance	—	°C/W

(1) For more information about traditional and new thermal metrics, see the *Semiconductor and IC Package Thermal Metrics* application report, SPRA953.

Copyright © 1999–2016, Texas Instruments Incorporated

6.5 Electrical Characteristics

V_{CC} = full range, T_A = –40°C to 105°C, unless otherwise noted. Typical values are at T_A = 25°C, V_{CC} = 5 V for 4.63, 4.38, and 4.00 versions, V_{CC} = 3.3 V for 3.08 and 2.93 versions, and V_{CC} = 3 V for 2.63 and 2.45 version(1).

PARAMETER		TEST CONDITIONS		MIN	TYP	MAX	UNIT
V_{TH}	Reset Threshold(2)	LM8xx: 4.63 V	T_A = 25°C	4.56	4.63	4.70	V
			T_A = –40°C to 85°C	4.50		4.75	
			T_A = 85°C to 105°C	4.40		4.86	
		LM8xx: 4.38 V	T_A = 25°C	4.31	4.38	4.45	
			T_A = –40°C to 85°C	4.25		4.50	
			T_A = 85°C to 105°C	4.16		4.56	
		LM8xx: 4.00 V	T_A = 25°C	3.93	4.00	4.06	
			T_A = –40°C to 85°C	3.89		4.10	
			T_A = 85°C to 105°C	3.80		4.20	
		LM8xx: 3.08 V	T_A = 25°C	3.04	3.08	3.11	
			T_A = –40°C to 85°C	3.00		3.15	
			T_A = 85°C to 105°C	2.92		3.23	
		LM8xx: 2.93 V	T_A = 25°C	2.89	2.93	2.96	
			T_A = –40°C to 85°C	2.85		3.00	
			T_A = 85°C to 105°C	2.78		3.08	
		LM8xx: 2.63 V	T_A = 25°C	2.59	2.63	2.66	
			T_A = –40°C to 85°C	2.55		2.70	
			T_A = 85°C to 105°C	2.50		2.76	
		LM8xx: 2.45 V	T_A = 25°C	2.41	2.45	2.49	
			T_A = –40°C to 85°C	2.38		2.52	
			T_A = 85°C to 105°C	2.33		2.57	
	Reset Threshold Temperature Coefficient				30		ppm/°C
	V_{CC} to Reset Delay(2)	V_{CC} = V_{TH} to (V_{TH} – 100 mV)			20		µs
	Reset Active Timeout Period	T_A = –40°C to 85°C		140	240	560	ms
		T_A = 85°C to 105°C		100		840	
V_{OL}	$\overline{\text{RESET}}$ Output Voltage Low (LM809)	V_{CC} = $V_{TH(min)}$, I_{SINK} = 1.2 mA, LM809: 2.45, 2.63, 2.93, 3.08				0.3	V
		V_{CC} = $V_{TH(min)}$, I_{SINK} = 3.2 mA, LM809: 4.63, 4.38, 4.00				0.4	
		V_{CC} > 1 V, I_{SINK} = 50 µA				0.3	
	RESET Output Voltage Low (LM810)	V_{CC} = $V_{TH(max)}$, I_{SINK} = 1.2 mA, LM810: 2.63, 2.93, 3.08				0.3	
		V_{CC} = $V_{TH(max)}$, I_{SINK} = 3.2 mA, LM810: 4.63, 4.38, 4.00				0.4	
V_{OH}	$\overline{\text{RESET}}$ Output Voltage High (LM809)	V_{CC} > $V_{TH(max)}$, I_{SOURCE} = 500 µA, LM809: 2.45, 2.63, 2.93, 3.08		0.8 × V_{CC}			V
		V_{CC} > $V_{TH(max)}$, I_{SOURCE} = 800 µA, LM809: 4.63, 4.38, 4.00		V_{CC} – 1.5			
	RESET Output Voltage High (LM810)	1.8 V < V_{CC} < $V_{TH(min)}$, I_{SOURCE} = 150 µA		0.8 × V_{CC}			

(1) Production testing done at T_A = 25°C, over temperature limits specified by design only.
(2) $\overline{\text{RESET}}$ Output for LM809, RESET output for LM810.

Copyright © 1999–2016, Texas Instruments Incorporated

6.6 Typical Characteristics

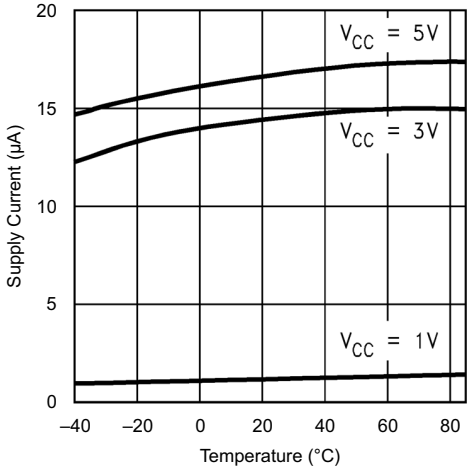

Figure 1. Supply Current vs Temperature (No Load, LM8xx: 2.63, 2.93, 3.08)

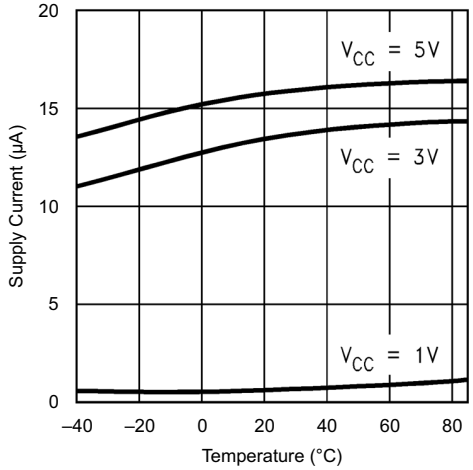

Figure 2. Supply Current vs Temperature (No Load, LM8xx: 4.63, 4.38)

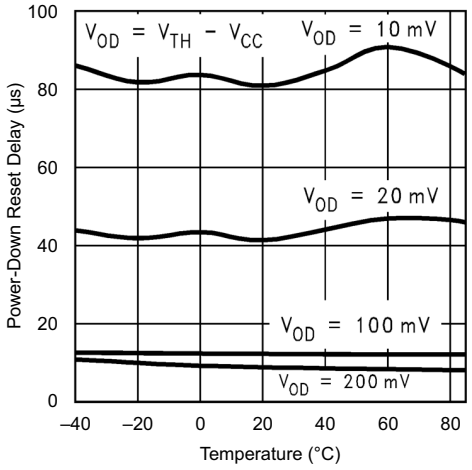

Figure 3. Power-Down Reset Delay vs Temp (LM8xx: 2.63, 2.93, 3.08)

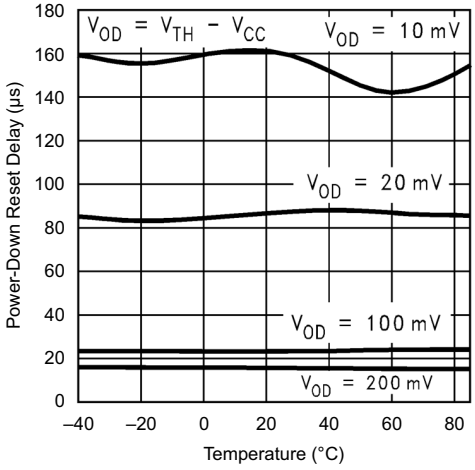

Figure 4. Power-Down Reset Delay vs Temperature (LM8xx: 4.63, 4.38)

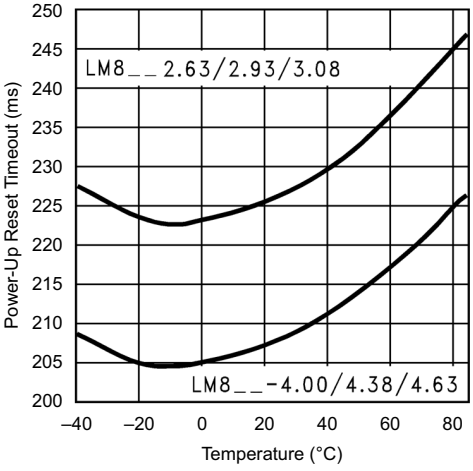

Figure 5. Power-Up Reset Timeout vs Temperature

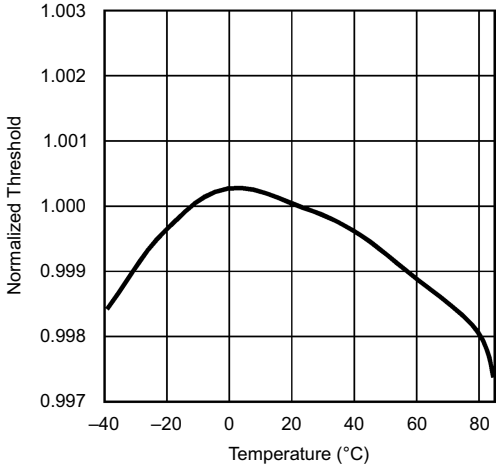

Figure 6. Normalized Reset Threshold vs Temperature

Copyright © 1999–2016, Texas Instruments Incorporated

7 Detailed Description

7.1 Overview

The LM809 and LM810 microprocessor supervisory circuits provide a simple solution to monitor the power supplies in microprocessor and digital systems and provide a reset during power-up, power-down, and brown-out conditions. The reset signal is controlled by the factory-programmed reset threshold on the V_{CC} supply voltage pin. When the voltage declines below the reset threshold, the reset signal is asserted and remains asserted for 240 ms after V_{CC} rises above the threshold. The LM809 has an active-low $\overline{\text{RESET}}$ output, while the LM810 has an active-high RESET output. The available threshold options are 2.63 V, 2.93 V, 3.08 V, 4.38 V, and 4.63 V to provide precision monitoring of supply voltages.

7.2 Functional Block Diagram

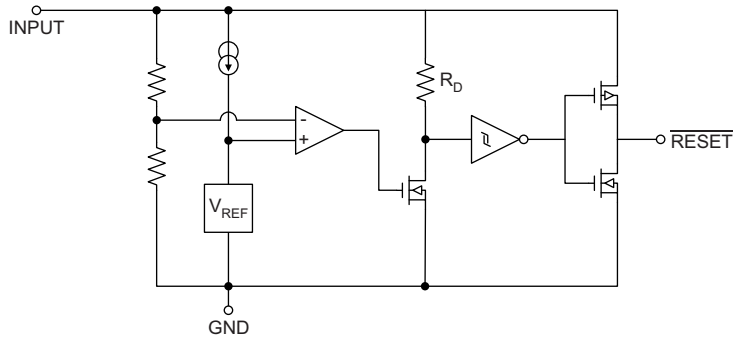

7.3 Feature Description

7.3.1 Benefits of Precision Reset Thresholds

A microprocessor supply supervisor must provide a reset output within a predictable range of the supply voltage. A common threshold range is between 5% and 10% below the nominal supply voltage. The 4.63-V and 3.08-V options of the LM809 and LM810 use highly accurate circuitry to ensure that the reset threshold occurs only within this range (for 5-V and 3.3-V supplies). The other voltage options have the same tight tolerance to ensure a reset signal for other narrow monitor ranges. See Table 1 for examples of how the standard reset thresholds apply to 3-V, 3.3-V, and 5-V nominal supply voltages.

Table 1. Reset Thresholds Related to Common Supply Voltages

Reset Threshold	3 V	3.3 V	5 V
4.63 ± 3%			90 – 95%
4.38 ± 3%			85 – 90%
4.00 ± 3%			78 – 82%
3.08 ± 3%		90 – 95%	
2.93 ± 3%		86 – 90%	
2.63 ± 3%	85 – 90%	77 – 81%	
2.45 ± 3%	79 – 84%	72 – 76%	

Copyright © 1999–2016, Texas Instruments Incorporated

7.3.1.1 Ensuring a Valid Reset Output Down to V_{CC} = 0 V

When V_{CC} falls below 1 V, the LM809 $\overline{\text{RESET}}$ output no longer sinks current. A high-impedance CMOS logic input connected to $\overline{\text{RESET}}$ can therefore drift to undetermined voltages. To prevent this situation, a 100-kΩ resistor should be connected from the $\overline{\text{RESET}}$ output to ground, as shown in Figure 7.

A 100-kΩ pullup resistor to V_{CC} is also recommended for the LM810, if RESET is required to remain valid for V_{CC} < 1 V.

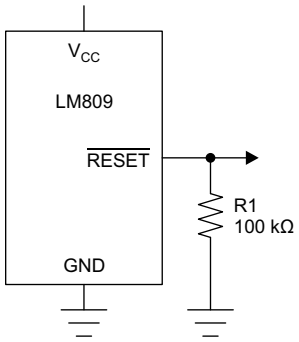

Figure 7. $\overline{\text{RESET}}$ Valid to V_{CC} = Ground Circuit

7.3.1.2 Negative-Going V_{CC} Transients

The LM809 and LM810 are relatively immune to short negative-going transients or glitches on V_{CC}. Figure 8 shows the maximum pulse width a negative-going V_{CC} transient can have without causing a reset pulse. In general, as the magnitude of the transient increases, going further below the threshold, the maximum allowable pulse width decreases. Typically, for the 4.63-V and 4.38-V version of the LM809 or LM810, a V_{CC} transient that goes 100 mV below the reset threshold and lasts 20 µs or less will not cause a reset pulse. A 0.1-µF bypass capacitor mounted as close as possible to the V_{CC} pin will provide additional transient rejection.

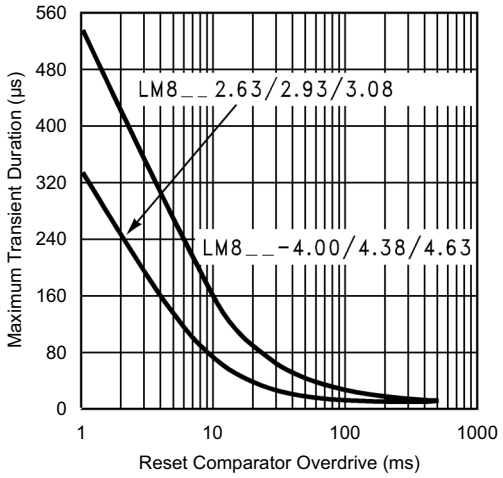

Figure 8. Maximum Transient Duration without Causing a Reset Pulse vs Reset Comparator Overdrive

Copyright © 1999–2016, Texas Instruments Incorporated

7.3.1.3 Interfacing to µPs with Bidirectional Reset Pins

Microprocessors with bidirectional reset pins, such as the Motorola 68HC11 series, can be connected to the LM809 $\overline{\text{RESET}}$ output. To ensure a correct output on the LM809 even when the microprocessor reset pin is in the opposite state, connect a 4.7-kΩ resistor between the LM809 $\overline{\text{RESET}}$ output and the µP reset pin, as shown in Figure 9. Buffer the LM809 $\overline{\text{RESET}}$ output to other system components.

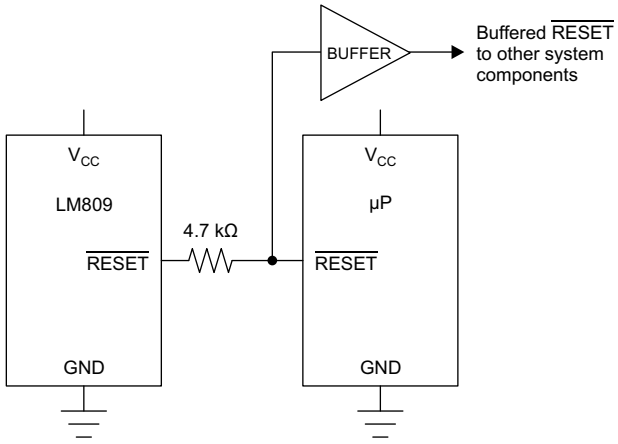

Figure 9. Interfacing to Microprocessors with Bidirectional Reset I/O

7.4 Device Functional Modes

7.4.1 V_{CC} Supply Voltage Low

When V_{CC} supply voltage declines below the reset threshold, the $\overline{\text{RESET}}$ output is asserted. For LM809, the active-low $\overline{\text{RESET}}$ output is low. For LM810, the active-high RESET output is high.

7.4.2 V_{CC} Supply Voltage High

When the V_{CC} supply voltage rises above the reset threshold, the $\overline{\text{RESET}}$ output resets after 240 ms. For LM809, the active-low $\overline{\text{RESET}}$ output rises high. For LM810, the active-high RESET output drops low.

Copyright © 1999–2016, Texas Instruments Incorporated

8 Application and Implementation

NOTE

Information in the following applications sections is not part of the TI component specification, and TI does not warrant its accuracy or completeness. TI's customers are responsible for determining suitability of components for their purposes. Customers should validate and test their design implementation to confirm system functionality.

8.1 Application Information

The LM809 and LM810 are a supervisor circuit for microprocessor and digital systems. With a low supply current of only 15 µA, the LM809 and LM810 are ideal for use in portable equipment.

8.2 Typical Application

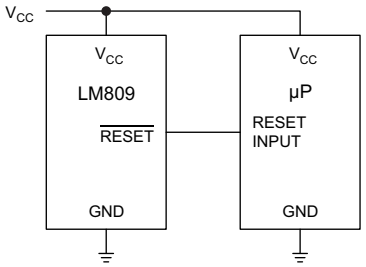

Figure 10. Microprocessor $\overline{\text{RESET}}$ Circuit

8.2.1 Design Requirements

For this design example, use the parameters listed in Table 2 as the input parameters.

Table 2. Design Parameters

DESIGN PARAMETER	EXAMPLE VALUE
Input supply voltage range	1 V to 5.5 V
Reset output voltage (high)	Input supply
Reset output voltage (low)	0 V

8.2.2 Detailed Design Procedure

For the typical application circuit, all that is required is the LM809 or LM810 IC, but TI recommends an input capacitor to help with input voltage transients. A typical input capacitor value is 0.1 uF and must be rated for the highest expected input voltage.

Copyright © 1999–2016, Texas Instruments Incorporated

8.2.3 Application Curve

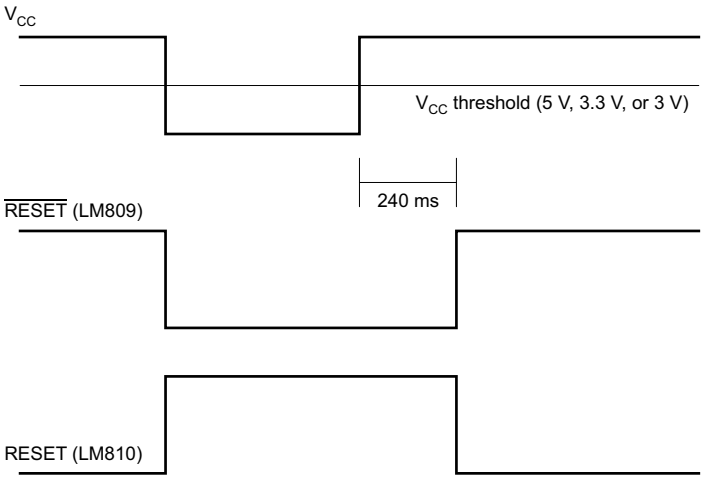

Figure 11. Reset Active Timeout

9 Power Supply Recommendations

The input of the LM809 is designed to handle up to the supply voltage absolute maximum rating of 6.5 V. If the input supply is susceptible to any large transients above the maximum rating, then extra precautions should be taken. An input capacitor is recommended to avoid false reset output triggers due to noise.

10 Layout

10.1 Layout Guidelines

Place the input capacitor as close as possible to the IC.

10.2 Layout Example

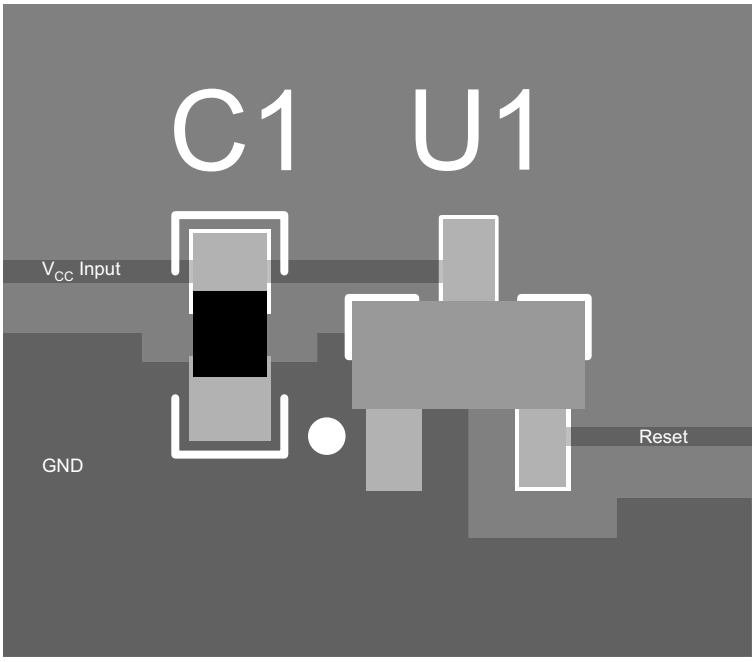

Figure 12. Layout Example

Copyright © 1999–2016, Texas Instruments Incorporated

11 Device and Documentation Support

11.1 Related Links

The table below lists quick access links. Categories include technical documents, support and community resources, tools and software, and quick access to sample or buy.

Table 3. Related Links

PARTS	PRODUCT FOLDER	SAMPLE & BUY	TECHNICAL DOCUMENTS	TOOLS & SOFTWARE	SUPPORT & COMMUNITY
LM809	Click here	Click here	Click here	Click here	Click here
LM810	Click here	Click here	Click here	Click here	Click here

11.2 Community Resources

The following links connect to TI community resources. Linked contents are provided "AS IS" by the respective contributors. They do not constitute TI specifications and do not necessarily reflect TI's views; see TI's Terms of Use.

TI E2E™ Online Community ***TI's Engineer-to-Engineer (E2E) Community.*** Created to foster collaboration among engineers. At e2e.ti.com, you can ask questions, share knowledge, explore ideas and help solve problems with fellow engineers.

Design Support ***TI's Design Support*** Quickly find helpful E2E forums along with design support tools and contact information for technical support.

11.3 Trademarks

E2E is a trademark of Texas Instruments.
All other trademarks are the property of their respective owners.

11.4 Electrostatic Discharge Caution



These devices have limited built-in ESD protection. The leads should be shorted together or the device placed in conductive foam during storage or handling to prevent electrostatic damage to the MOS gates.

11.5 Glossary

SLYZ022 — *TI Glossary*.

This glossary lists and explains terms, acronyms, and definitions.

12 Mechanical, Packaging, and Orderable Information

The following pages include mechanical, packaging, and orderable information. This information is the most current data available for the designated devices. This data is subject to change without notice and revision of this document. For browser-based versions of this data sheet, refer to the left-hand navigation.

Copyright © 1999–2016, Texas Instruments Incorporated

PACKAGING INFORMATION

Orderable Device	Status (1)	Package Type	Package Drawing	Pins	Package Qty	Eco Plan (2)	Lead/Ball Finish (6)	MSL Peak Temp (3)	Op Temp (°C)	Device Marking (4/5)	Samples
LM809M3-2.63	NRND	SOT-23	DBZ	3	1000	TBD	Call TI	Call TI	-40 to 105	S3B	
LM809M3-2.63/NOPB	ACTIVE	SOT-23	DBZ	3	1000	Green (RoHS & no Sb/Br)	CU SN	Level-1-260C-UNLIM	-40 to 105	S3B	Samples
LM809M3-2.93	NRND	SOT-23	DBZ	3	1000	TBD	Call TI	Call TI	-40 to 105	S4B	
LM809M3-2.93/NOPB	ACTIVE	SOT-23	DBZ	3	1000	Green (RoHS & no Sb/Br)	CU SN	Level-1-260C-UNLIM	-40 to 105	S4B	Samples
LM809M3-3.08	NRND	SOT-23	DBZ	3	1000	TBD	Call TI	Call TI	-40 to 105	S5B	
LM809M3-3.08/NOPB	ACTIVE	SOT-23	DBZ	3	1000	Green (RoHS & no Sb/Br)	CU SN	Level-1-260C-UNLIM	-40 to 105	S5B	Samples
LM809M3-4.38/NOPB	ACTIVE	SOT-23	DBZ	3	1000	Green (RoHS & no Sb/Br)	CU SN	Level-1-260C-UNLIM	-40 to 105	S7B	Samples
LM809M3-4.63/NOPB	ACTIVE	SOT-23	DBZ	3	1000	Green (RoHS & no Sb/Br)	CU SN	Level-1-260C-UNLIM	-40 to 105	S8B	Samples
LM809M3X-2.63/NOPB	ACTIVE	SOT-23	DBZ	3	3000	Green (RoHS & no Sb/Br)	CU SN	Level-1-260C-UNLIM	-40 to 105	S3B	Samples
LM809M3X-2.93/NOPB	ACTIVE	SOT-23	DBZ	3	3000	Green (RoHS & no Sb/Br)	CU SN	Level-1-260C-UNLIM	-40 to 105	S4B	Samples
LM809M3X-3.08/NOPB	ACTIVE	SOT-23	DBZ	3	3000	Green (RoHS & no Sb/Br)	CU SN	Level-1-260C-UNLIM	-40 to 105	S5B	Samples
LM809M3X-4.38/NOPB	ACTIVE	SOT-23	DBZ	3	3000	Green (RoHS & no Sb/Br)	CU SN	Level-1-260C-UNLIM		S7B	Samples
LM809M3X-4.63/NOPB	ACTIVE	SOT-23	DBZ	3	3000	Green (RoHS & no Sb/Br)	CU SN	Level-1-260C-UNLIM	-40 to 105	S8B	Samples
LM810M3-4.63	NRND	SOT-23	DBZ	3	1000	TBD	Call TI	Call TI	-40 to 105	SEB	
LM810M3-4.63/NOPB	ACTIVE	SOT-23	DBZ	3	1000	Green (RoHS & no Sb/Br)	CU SN	Level-1-260C-UNLIM	-40 to 105	SEB	Samples
LM810M3X-4.63/NOPB	ACTIVE	SOT-23	DBZ	3	3000	Green (RoHS & no Sb/Br)	CU SN	Level-1-260C-UNLIM	-40 to 105	SEB	Samples

(1) The marketing status values are defined as follows:
ACTIVE: Product device recommended for new designs.
LIFEBUY: TI has announced that the device will be discontinued, and a lifetime-buy period is in effect.
NRND: Not recommended for new designs. Device is in production to support existing customers, but TI does not recommend using this part in a new design.
PREVIEW: Device has been announced but is not in production. Samples may or may not be available.
OBSOLETE: TI has discontinued the production of the device.

(2) Eco Plan - The planned eco-friendly classification: Pb-Free (RoHS), Pb-Free (RoHS Exempt), or Green (RoHS & no Sb/Br) - please check http://www.ti.com/productcontent for the latest availability information and additional product content details.
TBD: The Pb-Free/Green conversion plan has not been defined.
Pb-Free (RoHS): TI's terms "Lead-Free" or "Pb-Free" mean semiconductor products that are compatible with the current RoHS requirements for all 6 substances, including the requirement that lead not exceed 0.1% by weight in homogeneous materials. Where designed to be soldered at high temperatures, TI Pb-Free products are suitable for use in specified lead-free processes.
Pb-Free (RoHS Exempt): This component has a RoHS exemption for either 1) lead-based flip-chip solder bumps used between the die and package, or 2) lead-based die adhesive used between the die and leadframe. The component is otherwise considered Pb-Free (RoHS compatible) as defined above.
Green (RoHS & no Sb/Br): TI defines "Green" to mean Pb-Free (RoHS compatible), and free of Bromine (Br) and Antimony (Sb) based flame retardants (Br or Sb do not exceed 0.1% by weight in homogeneous material)

(3) MSL, Peak Temp. - The Moisture Sensitivity Level rating according to the JEDEC industry standard classifications, and peak solder temperature.

(4) There may be additional marking, which relates to the logo, the lot trace code information, or the environmental category on the device.

(5) Multiple Device Markings will be inside parentheses. Only one Device Marking contained in parentheses and separated by a "~" will appear on a device. If a line is indented then it is a continuation of the previous line and the two combined represent the entire Device Marking for that device.

(6) Lead/Ball Finish - Orderable Devices may have multiple material finish options. Finish options are separated by a vertical ruled line. Lead/Ball Finish values may wrap to two lines if the finish value exceeds the maximum column width.

Important Information and Disclaimer: The information provided on this page represents TI's knowledge and belief as of the date that it is provided. TI bases its knowledge and belief on information provided by third parties, and makes no representation or warranty as to the accuracy of such information. Efforts are underway to better integrate information from third parties. TI has taken and continues to take reasonable steps to provide representative and accurate information but may not have conducted destructive testing or chemical analysis on incoming materials and chemicals. TI and TI suppliers consider certain information to be proprietary, and thus CAS numbers and other limited information may not be available for release.

In no event shall TI's liability arising out of such information exceed the total purchase price of the TI part(s) at issue in this document sold by TI to Customer on an annual basis.

TAPE AND REEL INFORMATION

REEL DIMENSIONS

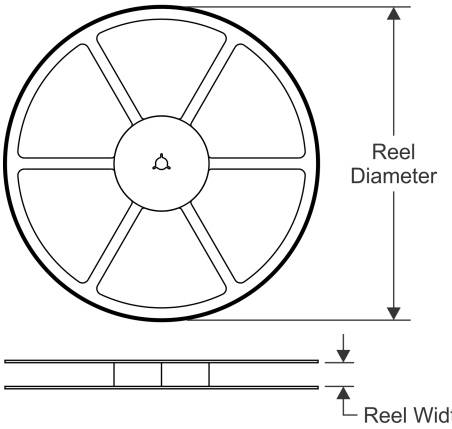

TAPE DIMENSIONS

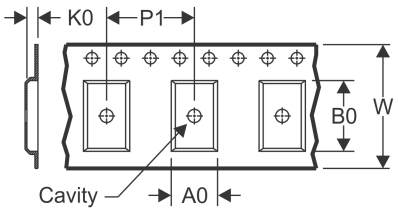

A0	Dimension designed to accommodate the component width
B0	Dimension designed to accommodate the component length
K0	Dimension designed to accommodate the component thickness
W	Overall width of the carrier tape
P1	Pitch between successive cavity centers

QUADRANT ASSIGNMENTS FOR PIN 1 ORIENTATION IN TAPE

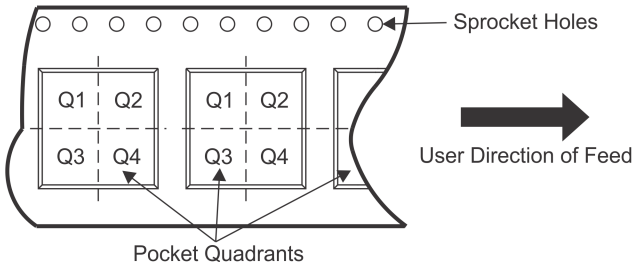

*All dimensions are nominal

Device	Package Type	Package Drawing	Pins	SPQ	Reel Diameter (mm)	Reel Width W1 (mm)	A0 (mm)	B0 (mm)	K0 (mm)	P1 (mm)	W (mm)	Pin1 Quadrant
LM809M3-2.63	SOT-23	DBZ	3	1000	178.0	8.4	3.3	2.9	1.22	4.0	8.0	Q3
LM809M3-2.63/NOPB	SOT-23	DBZ	3	1000	178.0	8.4	3.3	2.9	1.22	4.0	8.0	Q3
LM809M3-2.93	SOT-23	DBZ	3	1000	178.0	8.4	3.3	2.9	1.22	4.0	8.0	Q3
LM809M3-2.93/NOPB	SOT-23	DBZ	3	1000	178.0	8.4	3.3	2.9	1.22	4.0	8.0	Q3
LM809M3-3.08	SOT-23	DBZ	3	1000	178.0	8.4	3.3	2.9	1.22	4.0	8.0	Q3
LM809M3-3.08/NOPB	SOT-23	DBZ	3	1000	178.0	8.4	3.3	2.9	1.22	4.0	8.0	Q3
LM809M3-4.38/NOPB	SOT-23	DBZ	3	1000	178.0	8.4	3.3	2.9	1.22	4.0	8.0	Q3
LM809M3-4.63/NOPB	SOT-23	DBZ	3	1000	178.0	8.4	3.3	2.9	1.22	4.0	8.0	Q3
LM809M3X-2.63/NOPB	SOT-23	DBZ	3	3000	178.0	8.4	3.3	2.9	1.22	4.0	8.0	Q3
LM809M3X-2.93/NOPB	SOT-23	DBZ	3	3000	178.0	8.4	3.3	2.9	1.22	4.0	8.0	Q3
LM809M3X-3.08/NOPB	SOT-23	DBZ	3	3000	178.0	8.4	3.3	2.9	1.22	4.0	8.0	Q3
LM809M3X-4.38/NOPB	SOT-23	DBZ	3	3000	178.0	8.4	3.3	2.9	1.22	4.0	8.0	Q3
LM809M3X-4.63/NOPB	SOT-23	DBZ	3	3000	178.0	8.4	3.3	2.9	1.22	4.0	8.0	Q3
LM810M3-4.63	SOT-23	DBZ	3	1000	178.0	8.4	3.3	2.9	1.22	4.0	8.0	Q3
LM810M3-4.63/NOPB	SOT-23	DBZ	3	1000	178.0	8.4	3.3	2.9	1.22	4.0	8.0	Q3
LM810M3X-4.63/NOPB	SOT-23	DBZ	3	3000	178.0	8.4	3.3	2.9	1.22	4.0	8.0	Q3

TAPE AND REEL BOX DIMENSIONS

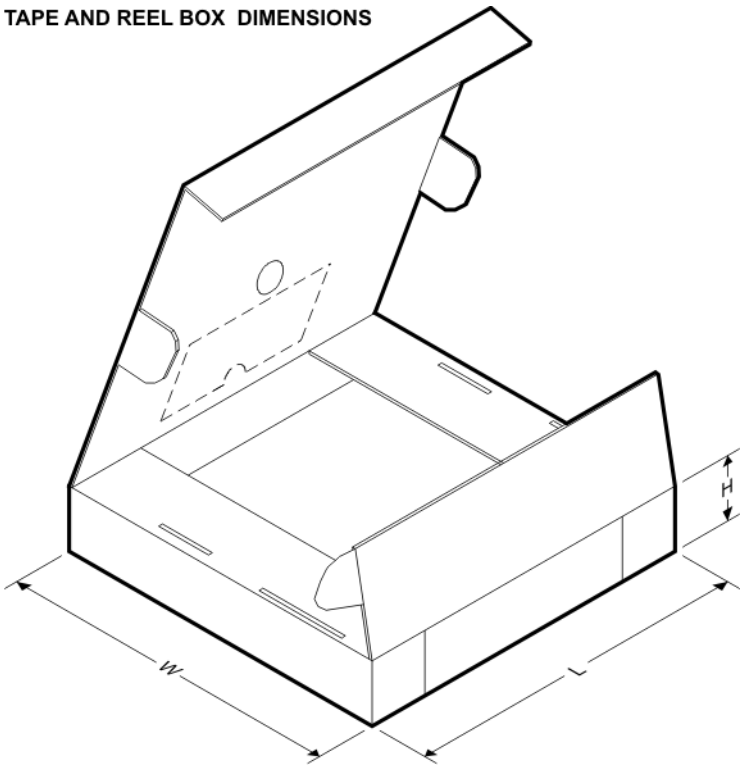

*All dimensions are nominal

Device	Package Type	Package Drawing	Pins	SPQ	Length (mm)	Width (mm)	Height (mm)
LM809M3-2.63	SOT-23	DBZ	3	1000	210.0	185.0	35.0
LM809M3-2.63/NOPB	SOT-23	DBZ	3	1000	210.0	185.0	35.0
LM809M3-2.93	SOT-23	DBZ	3	1000	210.0	185.0	35.0
LM809M3-2.93/NOPB	SOT-23	DBZ	3	1000	210.0	185.0	35.0
LM809M3-3.08	SOT-23	DBZ	3	1000	210.0	185.0	35.0
LM809M3-3.08/NOPB	SOT-23	DBZ	3	1000	210.0	185.0	35.0
LM809M3-4.38/NOPB	SOT-23	DBZ	3	1000	210.0	185.0	35.0
LM809M3-4.63/NOPB	SOT-23	DBZ	3	1000	210.0	185.0	35.0
LM809M3X-2.63/NOPB	SOT-23	DBZ	3	3000	210.0	185.0	35.0
LM809M3X-2.93/NOPB	SOT-23	DBZ	3	3000	210.0	185.0	35.0
LM809M3X-3.08/NOPB	SOT-23	DBZ	3	3000	210.0	185.0	35.0
LM809M3X-4.38/NOPB	SOT-23	DBZ	3	3000	210.0	185.0	35.0
LM809M3X-4.63/NOPB	SOT-23	DBZ	3	3000	210.0	185.0	35.0
LM810M3-4.63	SOT-23	DBZ	3	1000	210.0	185.0	35.0
LM810M3-4.63/NOPB	SOT-23	DBZ	3	1000	210.0	185.0	35.0
LM810M3X-4.63/NOPB	SOT-23	DBZ	3	3000	210.0	185.0	35.0

DBZ (R–PDSO–G3) PLASTIC SMALL–OUTLINE

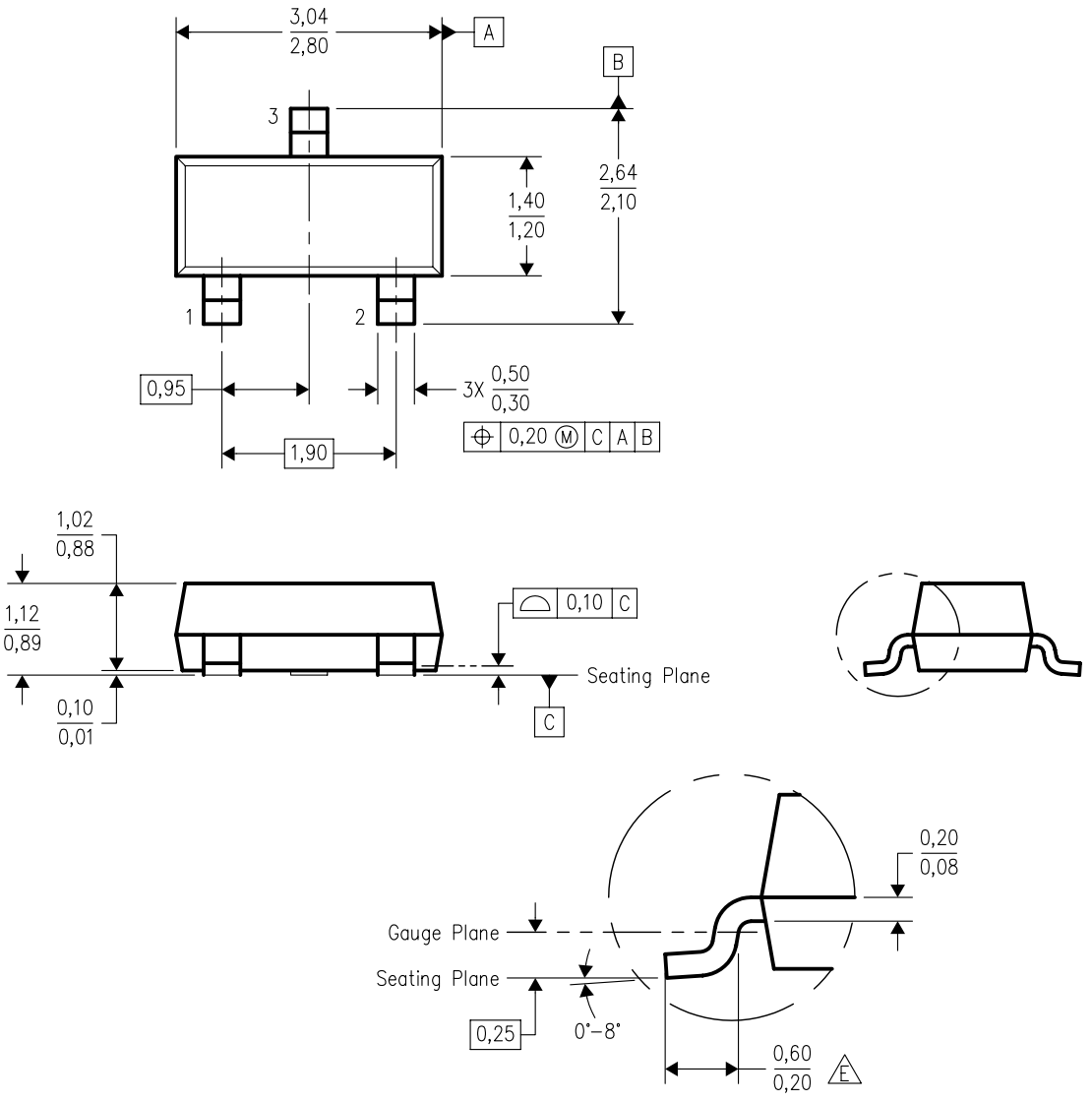

NOTES:
A. All linear dimensions are in millimeters. Dimensioning and tolerancing per ASME Y14.5M–1994.
B. This drawing is subject to change without notice.
C. Lead dimensions are inclusive of plating.
D. Body dimensions are exclusive of mold flash and protrusion. Mold flash and protrusion not to exceed 0.25 per side.
E. Falls within JEDEC TO–236 variation AB, except minimum foot length.

IMPORTANT NOTICE

Texas Instruments Incorporated and its subsidiaries (TI) reserve the right to make corrections, enhancements, improvements and other changes to its semiconductor products and services per JESD46, latest issue, and to discontinue any product or service per JESD48, latest issue. Buyers should obtain the latest relevant information before placing orders and should verify that such information is current and complete. All semiconductor products (also referred to herein as “components”) are sold subject to TI’s terms and conditions of sale supplied at the time of order acknowledgment.

TI warrants performance of its components to the specifications applicable at the time of sale, in accordance with the warranty in TI’s terms and conditions of sale of semiconductor products. Testing and other quality control techniques are used to the extent TI deems necessary to support this warranty. Except where mandated by applicable law, testing of all parameters of each component is not necessarily performed.

TI assumes no liability for applications assistance or the design of Buyers’ products. Buyers are responsible for their products and applications using TI components. To minimize the risks associated with Buyers’ products and applications, Buyers should provide adequate design and operating safeguards.

TI does not warrant or represent that any license, either express or implied, is granted under any patent right, copyright, mask work right, or other intellectual property right relating to any combination, machine, or process in which TI components or services are used. Information published by TI regarding third-party products or services does not constitute a license to use such products or services or a warranty or endorsement thereof. Use of such information may require a license from a third party under the patents or other intellectual property of the third party, or a license from TI under the patents or other intellectual property of TI.

Reproduction of significant portions of TI information in TI data books or data sheets is permissible only if reproduction is without alteration and is accompanied by all associated warranties, conditions, limitations, and notices. TI is not responsible or liable for such altered documentation. Information of third parties may be subject to additional restrictions.

Resale of TI components or services with statements different from or beyond the parameters stated by TI for that component or service voids all express and any implied warranties for the associated TI component or service and is an unfair and deceptive business practice. TI is not responsible or liable for any such statements.

Buyer acknowledges and agrees that it is solely responsible for compliance with all legal, regulatory and safety-related requirements concerning its products, and any use of TI components in its applications, notwithstanding any applications-related information or support that may be provided by TI. Buyer represents and agrees that it has all the necessary expertise to create and implement safeguards which anticipate dangerous consequences of failures, monitor failures and their consequences, lessen the likelihood of failures that might cause harm and take appropriate remedial actions. Buyer will fully indemnify TI and its representatives against any damages arising out of the use of any TI components in safety-critical applications.

In some cases, TI components may be promoted specifically to facilitate safety-related applications. With such components, TI’s goal is to help enable customers to design and create their own end-product solutions that meet applicable functional safety standards and requirements. Nonetheless, such components are subject to these terms.

No TI components are authorized for use in FDA Class III (or similar life-critical medical equipment) unless authorized officers of the parties have executed a special agreement specifically governing such use.

Only those TI components which TI has specifically designated as military grade or “enhanced plastic” are designed and intended for use in military/aerospace applications or environments. Buyer acknowledges and agrees that any military or aerospace use of TI components which have ***not*** been so designated is solely at the Buyer's risk, and that Buyer is solely responsible for compliance with all legal and regulatory requirements in connection with such use.

TI has specifically designated certain components as meeting ISO/TS16949 requirements, mainly for automotive use. In any case of use of non-designated products, TI will not be responsible for any failure to meet ISO/TS16949.

Products		**Applications**	
Audio	www.ti.com/audio	Automotive and Transportation	www.ti.com/automotive
Amplifiers	amplifier.ti.com	Communications and Telecom	www.ti.com/communications
Data Converters	dataconverter.ti.com	Computers and Peripherals	www.ti.com/computers
DLP® Products	www.dlp.com	Consumer Electronics	www.ti.com/consumer-apps
DSP	dsp.ti.com	Energy and Lighting	www.ti.com/energy
Clocks and Timers	www.ti.com/clocks	Industrial	www.ti.com/industrial
Interface	interface.ti.com	Medical	www.ti.com/medical
Logic	logic.ti.com	Security	www.ti.com/security
Power Mgmt	power.ti.com	Space, Avionics and Defense	www.ti.com/space-avionics-defense
Microcontrollers	microcontroller.ti.com	Video and Imaging	www.ti.com/video
RFID	www.ti-rfid.com		
OMAP Applications Processors	www.ti.com/omap	**TI E2E Community**	e2e.ti.com
Wireless Connectivity	www.ti.com/wirelessconnectivity		

Mailing Address: Texas Instruments, Post Office Box 655303, Dallas, Texas 75265
Copyright © 2016, Texas Instruments Incorporated