1A Low Dropout Positive Voltage Regulator

LM78M05LL3

Features

- Output Current of 1A
- Low Dropout, 1.4V max at 1A Output Current
- Good Noise Rejection
- Output Current Limiting
- Built-in Thermal Shutdown
- Fast Transient Response
- Pb-free lead plating package
- Can operate using MLCCs in the capacitance range of 2μF to 10μF

Description

The LM78M05LL3 positive voltage regulator is designed to provide 1A with high efficiency. All internal circuitry is designed to operate down to 1.4V input to output differential.
On-chip trimming adjusts the reference voltage to 1%.
Typical current limit value of 1.5A allows to minimize the stress on both the regulator and the power source circuitry under overload conditions.

Applications

- High Efficiency Linear Regulators
- Post Regulators for Switching Supplies
- Adjustable Power Supply

Typical Application Data

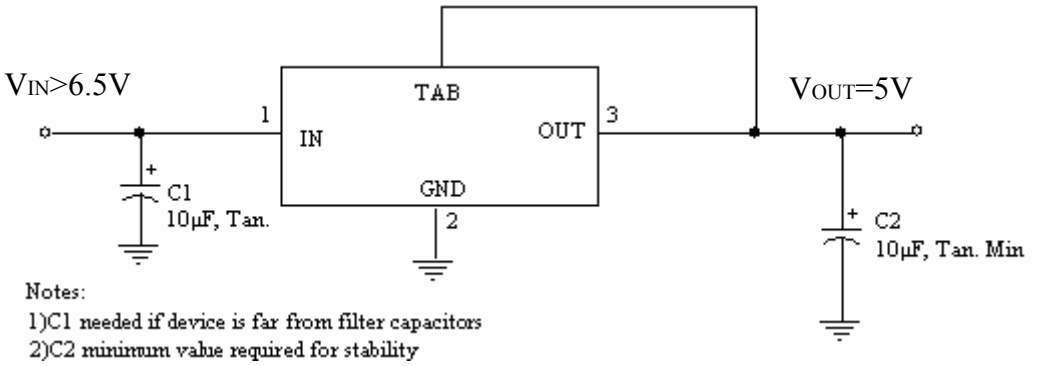

Package Information

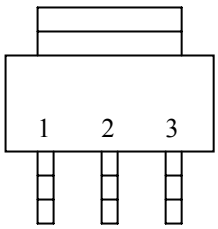

SOT-223

Pin	Name
1	INPUT
2	GND
3	OUTPUT

Absolute Maximum Ratings

Symbol	Parameter	Maximum	Units
P_D	Power Dissipation	Internally Limited	W
V_{IN}	Input Voltage	20	V
T_{OPR}	Operating Junction Temperature Range	-40 ~ +125	℃
T_{STG}	Storage Temperature	-65 ~ +150	℃
T_{MJ}	Maximum Junction Temperature	150	℃
V_{ESD}	Minimum ESD Rating (HBM)	3	kV

Ordering Information

Device	Output Voltage	Package	Shipping
LM78M05LL3-0-T3-G	5.0V	SOT-223 (pb-free lead plating and halogen-free package)	2500 pcs/ tape & reel

Block Diagram

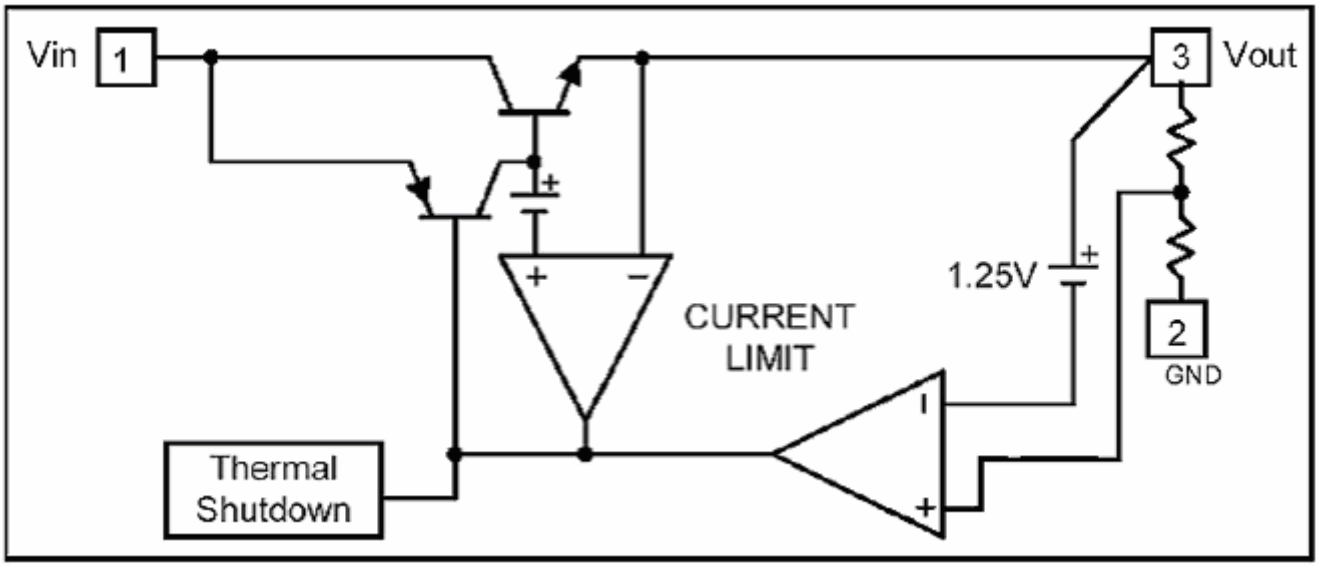

Electrical Characteristics @ I_O=10mA,T_J=25℃, unless otherwise specified

Parameter	Symbol	Test Conditions	Min	Typ	Max	Units
Output Voltage	Vo	6.5V≤V_{IN}≤15V, 0mA≤V_{IN}≤1A	4.900	5.000	5.100	V
Line Regulation	ΔVo	6.5V≤V_{IN}≤15V	-	-	0.2	%
Load Regulation (Note 1, 2)	ΔVo	V_{IN}=6.5V, 10mA≤I_O≤1A	-	10	20	mV
Dropout Voltage (V_{IN}-V_{OUT})	V_D	I_O=1A (ΔV_{OUT}=1%V_{OUT})	-	1.2	1.4	V
Current Limit	Imax	V_{IN}=6.5V	1	1.5	2	A
Quiescent Current	I_Q	V_{IN}=6.5V, 10mA≤I_O≤1A	-	3.5	10	mA
Ripple Rejection	RR	f=120Hz, V_{IN}=7.5V, I_O= 1A	60	-	-	dB
Temperature Coefficient of Output Voltage	TCVo	V_{IN}=6.5V, I_O= 10mA	-	-	0.015	%/℃
Thermal Resistance, Junction to Ambient(No heat sink, no air flow)	θ_{JA}		-	117	-	℃/W
Thermal Resistance, Junction to Case	θ_{JC}	Control Circuitry/ Power transistor	-	15	-	℃/W

Note : 1.See thermal regulation specifications for changes in output voltage due to heating effects. Line and load regulation are measured at a constant junction temperature by low duty cycle pulse testing. Load regulation is measured at the output lead 1/18" from the package.

2. Line and load regulation are guaranteed up to the maximum power dissipation of 3W. Power dissipation is determined by the difference in input and output and the output current. Guaranteed maximum power dissipation will not be available over the full input/output range.

Characteristic Curves

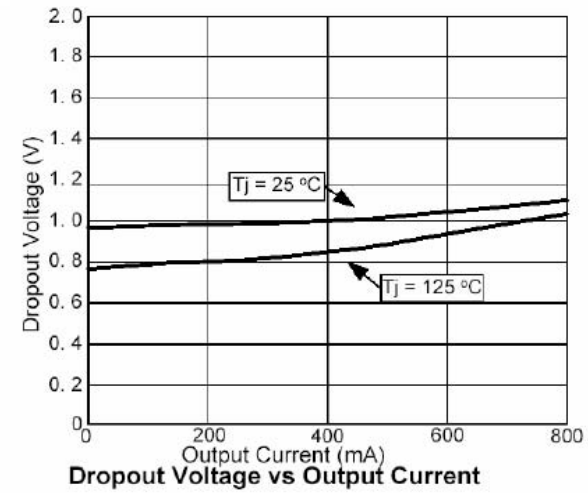

Dropout Voltage vs Output Current

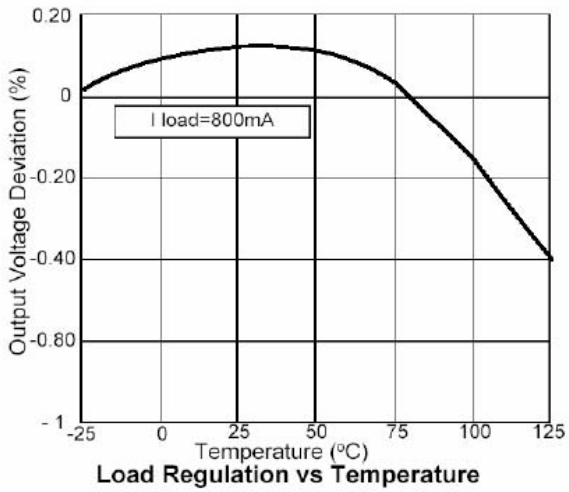

Load Regulation vs Temperature

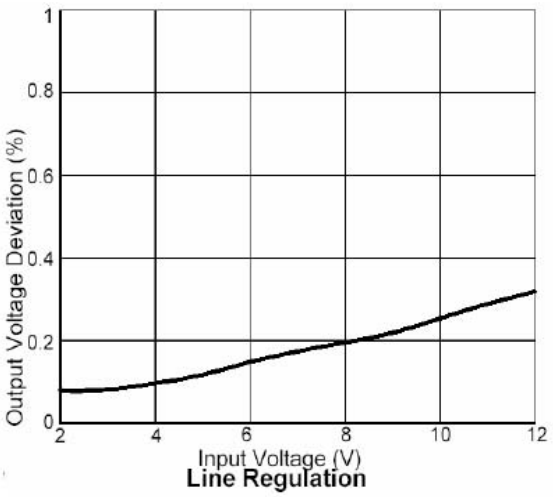

Line Regulation

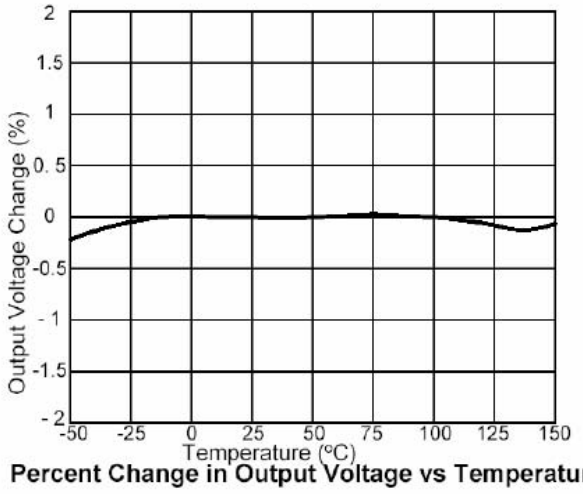

Percent Change in Output Voltage vs Temperature

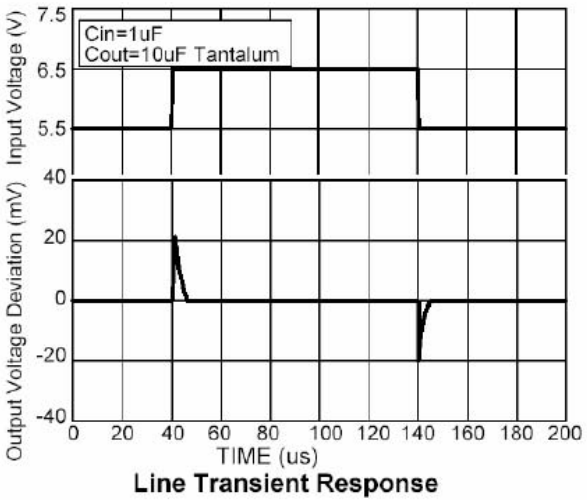

Line Transient Response

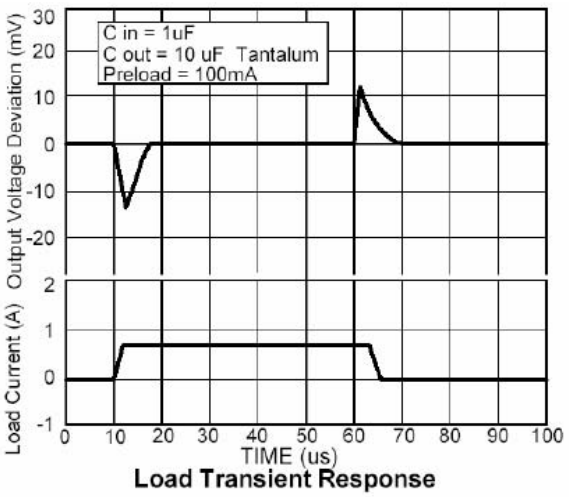

Load Transient Response

Recommended soldering footprint

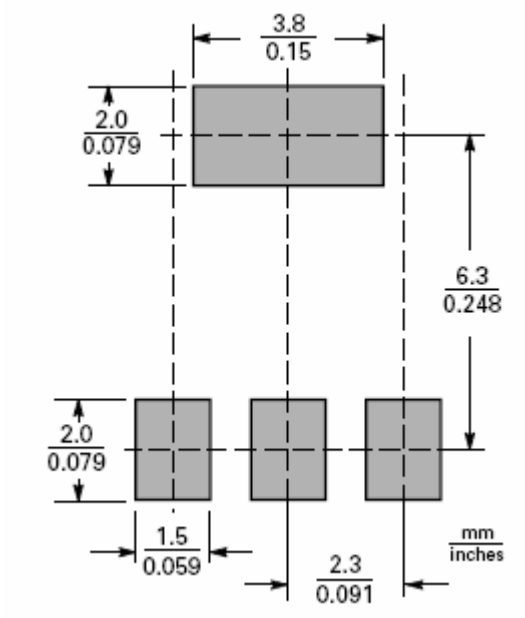

Reel Dimension

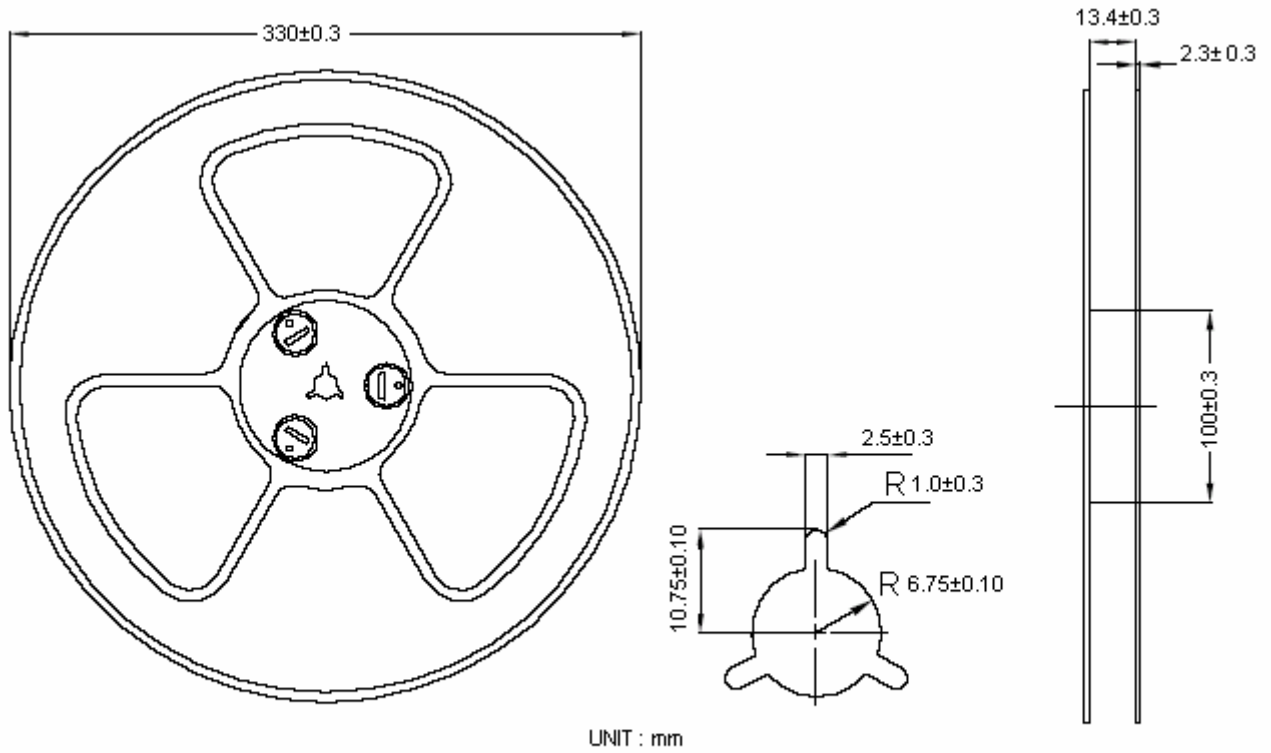

UNIT : mm

NOTE : 1. Material : Anti-static polystyrene
2. Surface resistivity 10^9 Ω/sq

Carrier Tape Dimension

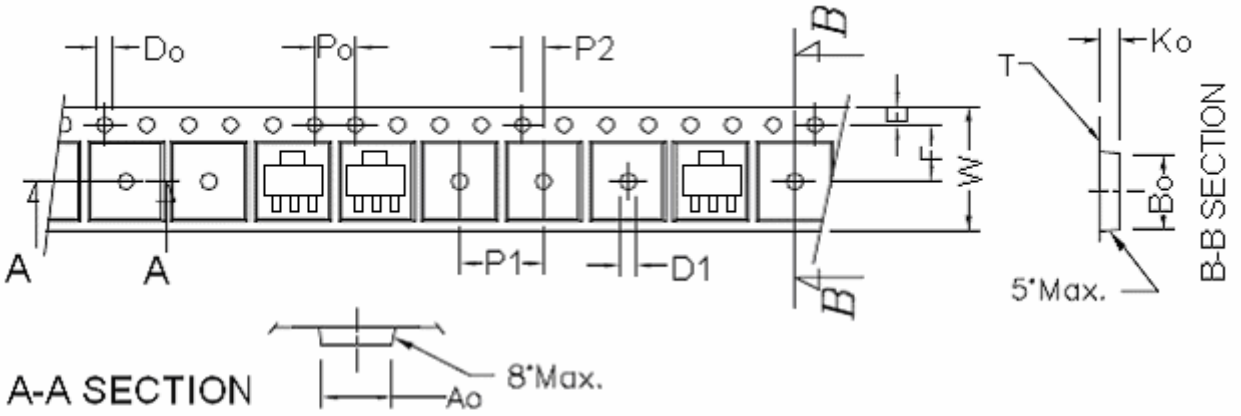

Symbol	Ao	Bo	Ko	Po	P1	P2	T
Spec	6.83±0.1	7.42±0.1	1.88±0.1	4.0±0.1	8.0±0.10	2.0±0.05	0.292±0.02
Symbol	E	F	Do	D1	W	10Po	
Spec	1.75±0.1	5.5±0.05	1.60±0.1	1.5±0.25	$12^{+0.3}_{-0.1}$	40.0±0.2	

Unit : mm

Recommended wave soldering condition

Product	Peak Temperature	Soldering Time
Pb-free devices	260 +0/-5 °C	5 +1/-1 seconds

Recommended temperature profile for IR reflow

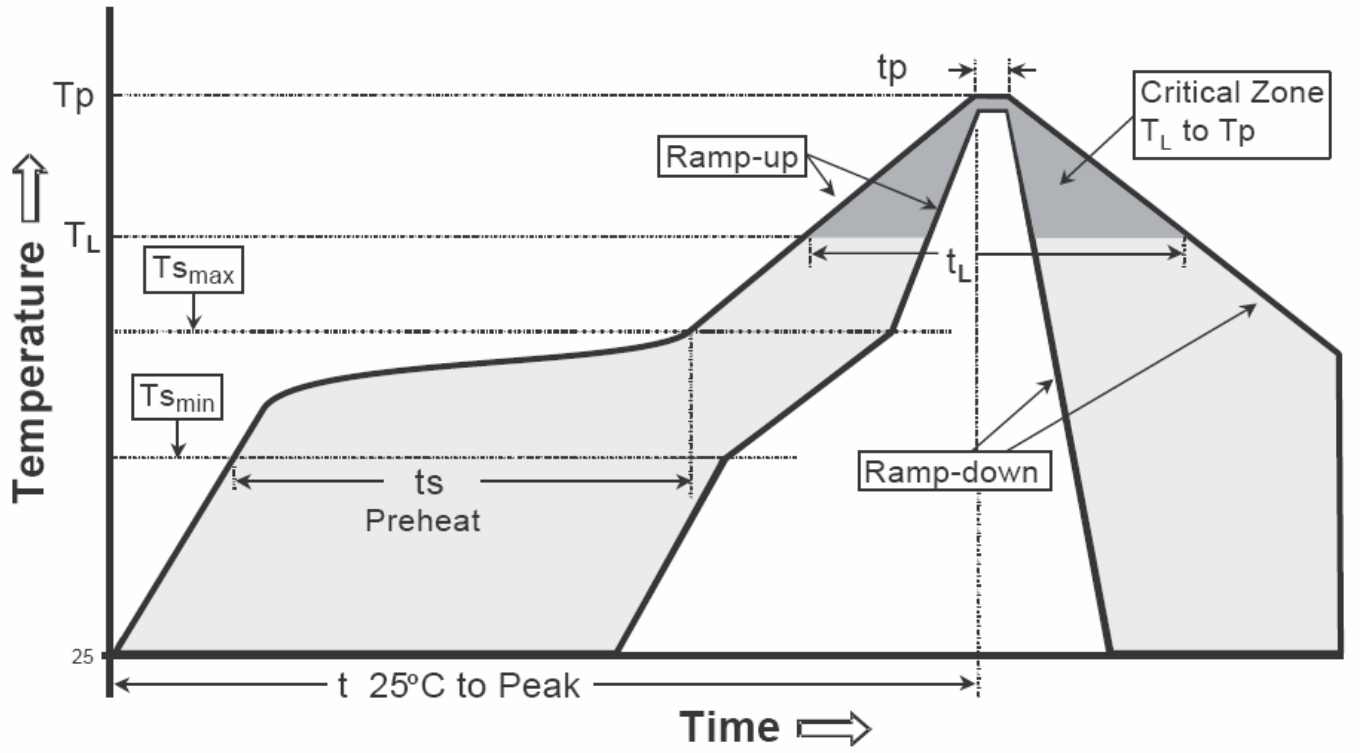

Profile feature	Sn-Pb eutectic Assembly	Pb-free Assembly
Average ramp-up rate (Tsmax to Tp)	3°C/second max.	3°C/second max.
Preheat −Temperature Min(T_S min) −Temperature Max(T_S max) −Time($t_{s\ min}$ to $t_{s\ max}$)	 100°C 150°C 60-120 seconds	 150°C 200°C 60-180 seconds
Time maintained above: −Temperature (T_L) − Time (t_L)	 183°C 60-150 seconds	 217°C 60-150 seconds
Peak Temperature(T_P)	240 +0/-5 °C	260 +0/-5 °C
Time within 5°C of actual peak temperature(tp)	10-30 seconds	20-40 seconds
Ramp down rate	6°C/second max.	6°C/second max.
Time 25 °C to peak temperature	6 minutes max.	8 minutes max.

Note : All temperatures refer to topside of the package, measured on the package body surface.

SOT-223 Dimension

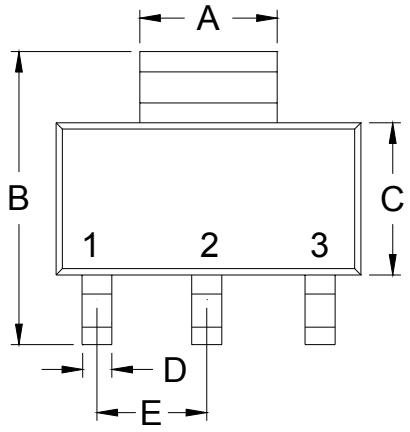

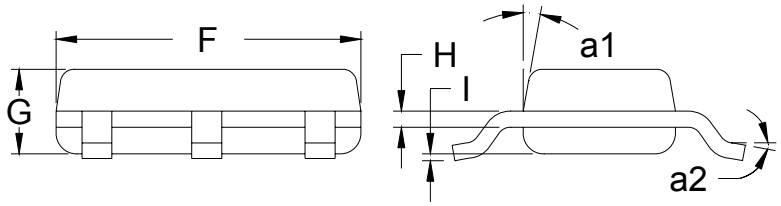

Marking:

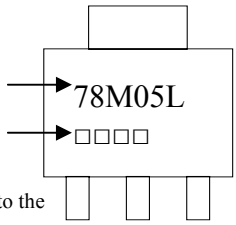

Device Name

Date Code : (from left to right)
1st code : year code, 1→2011,
2→2012, …,etc.
2nd code : month code, referring to the following table
3rd and 4th codes : production lot serial number , 01, 02, 03, … etc

Style: Pin 1.Input 2.GND 3.Output

3-Lead SOT-223 Plastic
Surface Mounted Package
CYStek Package Code: L3

Month code :

Month	Jan	Feb	Mar	Apr	May	Jun	Jul	Aug	Sep	Oct	Nov	Dec
Code	A	B	C	D	E	F	G	H	J	K	L	M

*: Typical

DIM	Inches		Millimeters		DIM	Inches		Millimeters	
	Min.	Max.	Min.	Max.		Min.	Max.	Min.	Max.
A	0.1142	0.1220	2.90	3.10	G	0.0551	0.0709	1.40	1.80
B	0.2638	0.2874	6.70	7.30	H	0.0098	0.0138	0.25	0.35
C	0.1299	0.1457	3.30	3.70	I	0.0008	0.0039	0.02	0.10
D	0.0236	0.0315	0.60	0.80	a1	*13°	-	*13°	-
E	*0.0906	-	*2.30	-	a2	0°	10°	0°	10°
F	0.2480	0.2638	6.30	6.70					

Notes: 1.Controlling dimension: millimeters.
2.Maximum lead thickness includes lead finish thickness, and minimum lead thickness is the minimum thickness of base material.
3.If there is any question with packing specification or packing method, please contact your local CYStek sales office.

Material:

- Lead: Pure tin plated.
- Mold Compound: Epoxy resin family, flammability solid burning class: UL94V-0.

Important Notice:

- All rights are reserved. Reproduction in whole or in part is prohibited without the prior written approval of CYStek.
- CYStek reserves the right to make changes to its products without notice.
- CYStek ***semiconductor products are not warranted to be suitable for use in Life-Support Applications, or systems.***
- CYStek assumes no liability for any consequence of customer product design, infringement of patents, or application assistance.