# LM63610-Q1 3.5-V to 36-V, 1-A, Automotive Step-down Voltage Converter

## 1 Features

- AEC-Q100-Qualified for automotive applications
  - Device temperature grade 1: –40°C to +125°C ambient operating temperature
- Supports automotive system requirements
  - Input voltage range: 3.5 V to 36 V
  - Short minimum on-time of 50 ns
  - Good EMI performance
    Pseudo-random spread spectrum
    Compatible with CISPR 25
  - Low operating quiescent current of 23 µA
  - Junction temperature range –40°C to +150°C
- High design flexibility
  - Pin selectable $V_{OUT}$: 3.3 V, 5 V, adjustable 1 V to 20 V
  - Pin compatible with LM63615/LM63625/LM63635 (1.5 A, or 2.5 A, and 3.25 A)
  - Pin selectable frequency: 400 kHz, 2.1 MHz, adjustable 250 kHz to 2200 kHz
  - Pin selectable FPWM, AUTO, sync modes
  - TSSOP: thermally-enhanced package
  - WSON: for space-constrained applications
- Small solution size
  - Highly integrated solution
  - Low component count

## 2 Applications

- Automotive infotainment and cluster
- Automotive body electronics and lighting
- Automotive ADAS

**Simplified Schematic**

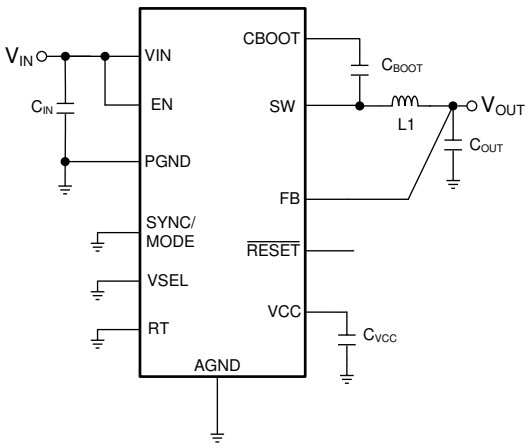


## 3 Description

The LM63610-Q1 regulators are a family of easy-to-use, synchronous, step-down DC/DC converters designed for rugged automotive applications. The LM63610-Q1 can drive up to 1 A of load current from an input of up to . The converter has high light load efficiency and output accuracy in a small solution size. Features such as a RESET flag and precision enable provide both flexible and easy-to-use solutions for a wide range of applications. Automatic frequency foldback at light load improves efficiency while maintaining tight load regulation. Integration eliminates many external components and provides a pinout designed for simple PCB layout. Protection features include thermal shutdown, input undervoltage lockout, cycle-by-cycle current limit, and hiccup short-circuit protection. The LM63610-Q1 is available in both the HTSSOP 16-pin power package, with PowerPAD™, and the WSON 12-pin power package. Please contact Texas Instruments for availability of the WSON package.

**Device Information(1)**

| PART NUMBER | PACKAGE | BODY SIZE (NOM) |
|---|---|---|
| LM63610-Q1 | HTSSOP (16) | 5.00 mm × 4.00 mm |
| LM63610-Q1 | WSON (12) | 3.00 mm x 3.00 mm |

(1) For all available packages, see the orderable addendum at the end of the data sheet.

**Typical Efficiency at 5 V Vout, 2.1 MHz**

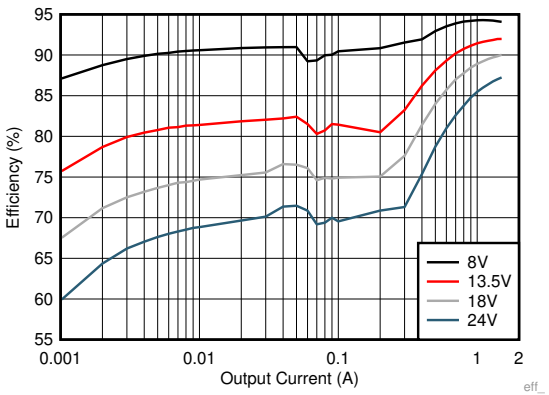


An IMPORTANT NOTICE at the end of this data sheet addresses availability, warranty, changes, use in safety-critical applications, intellectual property matters and other important disclaimers. PRODUCTION DATA.

# Table of Contents

**1 Features** ... 1
**2 Applications** ... 1
**3 Description** ... 1
**4 Revision History** ... 2
**5 Device Comparison Table** ... 3
**6 Pin Configuration and Functions** ... 4
**7 Specifications** ... 6
7.1 Absolute Maximum Ratings ... 6
7.2 ESD Ratings ... 6
7.3 Recommended Operating Conditions ... 6
7.4 Thermal Information ... 7
7.5 Electrical Characteristics ... 8
7.6 Timing Characteristics ... 10
7.7 Switching Characteristics ... 11
7.8 System Characteristics ... 12
7.9 Typical Characteristics ... 13
**8 Detailed Description** ... 14
8.1 Overview ... 14
8.2 Functional Block Diagram ... 14
8.3 Feature Description ... 14
8.4 Device Functional Modes ... 19
**9 Application and Implementation** ... 24
9.1 Application Information ... 24
9.2 Typical Application ... 24
9.3 What to Do and What Not to Do ... 35
**10 Power Supply Recommendations** ... 36
**11 Layout** ... 37
11.1 Layout Guidelines ... 37
11.2 Layout Example ... 39
**12 Device and Documentation Support** ... 40
12.1 Documentation Support ... 40
12.2 Receiving Notification of Documentation Updates 40
12.3 Support Resources ... 40
12.4 Trademarks ... 40
12.5 Electrostatic Discharge Caution ... 40
12.6 Glossary ... 40
**13 Mechanical, Packaging, and Orderable Information** ... 40

## 4 Revision History

| DATE | REVISION | NOTES |
|---|---|---|
| July 2020 | * | Initial release |


Copyright © 2020, Texas Instruments Incorporated

# 5 Device Comparison Table

| DEVICE OPTION | SAMPLE ORDER NUMBER | PACKAGE | RATED CURRENT | BODY SIZE (NOM) |
|---|---|---|---|---|
| LM63610DQ | See the orderable addendum at the end of the data sheet. | PWP0016D (HTSSOP) | 1 A | 5.00 mm x 4.00 mm |
| LM63610DQ | | DRR0012 (WSON) | | 3.00 mm x 3.00 mm |

Copyright © 2020, Texas Instruments Incorporated

# 6 Pin Configuration and Functions

**PWP Package**
**16-Pin HTSSOP With PowerPAD**
**Top View**

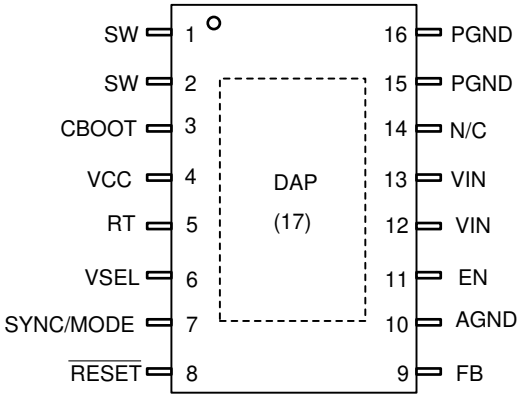


**WSON Package**
**12-Pin DRR0012 With PowerPad**
**Top View**

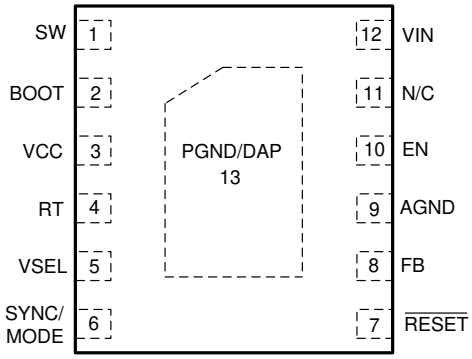



Copyright © 2020, Texas Instruments Incorporated

## Pin Functions

| PIN | | | TYPE | DESCRIPTION |
|---|---|---|---|---|
| TSSOP | WSON | NAME | | |
| 1, 2 | 1 | SW | P | Regulator switch node. Connect to power inductor. |
| 3 | 2 | CBOOT | P | Bootstrap supply voltage for internal high-side driver. Connect a high-quality 220-nF capacitor from this pin to the SW pin. |
| 4 | 3 | VCC | A | Internal 5-V LDO output. Used as supply to internal control circuits. Do not connect to external loads. Can be used as logic supply for regulator functions. Connect a high-quality 1-µF capacitor from this pin to PGND. |
| 5 | 4 | RT | A | Frequency programming input. Tie to VCC for 400 kHz or to AGND for 2.1 MHz or connect to an $R_T$ timing resistor. See the *Switching Frequency Selection* section for details. Do not float. |
| 6 | 5 | VSEL | A | Output voltage select input. Tie to VCC for 5-V output or to AGND for 3.3-V output; connect to a 10-kΩ for an adjustable output. See the *Output Voltage Selection* section for details. Do not float. |
| 7 | 6 | SYNC/MODE | A | Mode selection and synchronization input. Tie to VCC for FPWM mode; or to AGND for AUTO mode; or supply an external synchronizing clock to this input. |
| 8 | 7 | $\overline{\text{RESET}}$ | A | Open drain power-good flag output. Connect to suitable voltage supply through a current limiting resistor. High = power OK, low = power bad. Flag pulls low when EN = Low. Can be open when not used. |
| 9 | 8 | FB | A | Feedback input to regulator. Connect to output capacitor for 5-V or 3.3-V fixed option; or tap point of feedback voltage divider for ADJ option. Do not float; do not ground. |
| 10 | 9 | AGND | G | Analog ground for regulator and system. Ground reference for internal references and logic. All electrical parameters are measured with respect to this pin. Connect to system ground on PCB. |
| 11 | 10 | EN | A | Enable input to regulator. High = ON, Low = OFF. Can be connected directly to VIN. Do not float. |
| 12, 13 | 12 | VIN | P | Input supply to regulator. Connect a high-quality bypass capacitors directly to this pin and PGND. |
| 14 | 11 | NC | - | No internal connection to device |
| 15, 16 | 13 | PGND | G | Power ground terminal. Connect to system ground and AGND. Connect to bypass capacitor with short wide traces. |
| 17 | 13 | DAP | G | Electrical ground and heat sink connection. Solder directly to system ground plane. |
| A = Analog, P = Power, G = Ground | | | | |

Copyright © 2020, Texas Instruments Incorporated

# 7 Specifications

## 7.1 Absolute Maximum Ratings

Over the recommended junction temperature range(1)

| PARAMETER | | MIN | MAX | UNIT |
|---|---|---|---|---|
| | VIN to PGND (HTSSOP package) | –0.3 | 40 | V |
| | VIN to PGND (WSON package) | –0.3 | 42 | V |
| | EN to AGND (HTSSOP package) | –0.3 | 40 | V |
| | EN to AGND (WSON package) | –0.3 | 42 | V |
| | SYNC/MODE to AGND | –0.3 | 6 | V |
| | VOUT_SEL and RT to AGND | –0.3 | 5.5 | V |
| | $\overline{\text{RESET}}$ to AGND | –0.3 | 16 | V |
| | FB to AGND (Fixed VOUT mode) | –0.3 | 16 | V |
| | FB to AGND (Adjustable VOUT mode) | –0.3 | 5.5 | V |
| | AGND to PGND | –0.3 | 0.3 | V |
| | SW to PGND for transients of less than 10ns (HTSSOP package) | -6 | 40 | V |
| | SW to PGND for transients of less than 10ns (WSON package) | -6 | 42 | V |
| | BOOT to SW | –0.3 | 5.5 | V |
| | VCC to AGND | –0.3 | 5.5 | V |
| $T_J$ | Junction temperature | –40 | 150 | °C |
| $T_{stg}$ | Storage temperature | –65 | 150 | °C |

(1) Stresses beyond those listed under *Absolute Maximum Ratings* may cause permanent damage to the device. These are stress ratings only, which do not imply functional operation of the device at these or any other conditions beyond those indicated under *Recommended Operating Conditions*. Exposure to absolute-maximum-rated conditions for extended periods may affect device reliability.

## 7.2 ESD Ratings

| | | | VALUE | UNIT |
|---|---|---|---|---|
| $V_{(ESD)}$ | Electrostatic discharge | Human-body model (HBM), per AEC Q100-002(1) HBM ESD Clasification Level 2 | ±2000 | V |
| | | Charged-device model (CDM), per AEC Q100-011 CDM ESD clasiffication Level C5 | ±750 | V |

(1) AEC Q100-002 indicates that HBM stressing shall be in accordance with the ANSI/ESDA/JEDEC JS-001 specification.

## 7.3 Recommended Operating Conditions

Over the recommended junction temperature range of –40 °C to 150 °C (unless otherwise noted)(1)

| | | MIN | MAX | UNIT |
|---|---|---|---|---|
| | SYNC/MODE, VOUT_SEL and RT to AGND | 0 | 5 | V |
| | $\overline{\text{RESET}}$ | 0 | 5 | V |
| | $V_{OUT}$(2) | 1 | 20 | V |
| | $V_{CC}$ | 2.7 | 5.25 | V |

(1) Recommended operating conditions indicate conditions for which the device is intended to be functional, but do not ensure specific performance limits. For ensured specifications, see the *Electrical Characteristics Table*.
(2) Under no conditions should the output voltage be allowed to fall below zero volts.


Copyright © 2020, Texas Instruments Incorporated

## 7.4 Thermal Information

| THERMAL METRIC(1) | | LM636x5 DRR0012 (WSON) 12 PINS | LM636X5 HTSSOP (PWP) 16 PINS | UNIT |
|---|---|---|---|---|
| $R_{\theta JA}$ | Junction-to-ambient thermal resistance(2) | 47.4 | 43.1 | °C/W |
| $R_{\theta JC(top)}$ | Junction-to-case (top) thermal resistance | 44.6 | 35.4 | °C/W |
| $R_{\theta JB}$ | Junction-to-board thermal resistance | 20.7 | 18.5 | °C/W |
| $\Psi_{JT}$ | Junction-to-top characterization parameter | 0.7 | 0.9 | °C/W |
| $\Psi_{JB}$ | Junction-to-board characterization parameter | 20.7 | 18.5 | °C/W |
| $R_{\theta JC(bot)}$ | Junction-to-case (bottom) thermal resistance | 6.3 | 4.5 | °C/W |

(1) For more information about traditional and new thermal metrics, see the Semiconductor and IC Package Thermal Metrics application report.
(2) The value of $R_{\Theta JA}$ given in this table is only valid for comparison with other packages and can not be used for design purposes. These values were calculated in accordance with JESD 51-7, and simulated on a 4-layer JEDEC board. They do not represent the performance obtained in an actual application. For design information please see the ***Maximum Ambient Temperature*** section.

Copyright © 2020, Texas Instruments Incorporated

## 7.5 Electrical Characteristics

Limits apply over the junction temperature ($T_J$) range of –40°C to +150°C, unless otherwise stated. Minimum and maximum limits are specified through test, design or statistical correlation. Typical values represent the most likely parametric norm at $T_J$ = 25°C, and are provided for reference purposes only. Unless otherwise stated, the following conditions apply: $V_{IN}$ = 13.5 V.(1)

| PARAMETER | | TEST CONDITIONS | MIN | TYP | MAX | UNIT |
|---|---|---|---|---|---|---|
| **SUPPLY VOLTAGE (VIN PIN)** | | | | | | |
| $V_{IN}$ | Minimum operating input voltage | | | | 3.5 | V |
| $I_Q$ | Non-switching input current; measured at VIN pin(2) | $V_{EN}$ = 3.3 $V_{FB}$ = 1.2x regulation point | | 23 | 40 | µA |
| $I_{SD}$ | Shutdown quiescent current; measured at VIN pin | $V_{EN}$ = 0 | | 5.3 | 10 | µA |
| $V_{UVLO_R}$ | Minimum operating voltage threshold | Rising $V_{IN}$, $I_{VCC}$ = 0 | | | 3.5 | V |
| $V_{UVLO_F}$ | Minimum operating voltage threshold | Falling $V_{IN}$, $I_{VCC}$ = 0 | 2.6 | | 3 | V |
| $I_{POR}$ | Pull down current on SW when OVP is triggered | $V_{EN}$ = 0 $V_{SW}$ = 5 V | 0.5 | 1.5 | 2.5 | mA |
| **ENABLE (EN PIN)** | | | | | | |
| $V_{EN-VCC}$ | VCC enable voltage | $V_{EN}$ rising | | 0.85 | | V |
| $V_{EN-H}$ | Precision enable high level for VOUT | $V_{EN}$ rising | 1.425 | 1.5 | 1.575 | V |
| $V_{EN-L}$ | Precision enable low level for VOUT | $V_{EN}$ falling | 0.9 | 0.94 | | V |
| $I_{LKG-EN}$ | Enable input leakage current | $V_{EN}$ = 13.5 V | –100 | 0.2 | 150 | nA |
| **OUTPUT VOLTAGE SELECTION (VSEL PIN)** | | | | | | |
| $R_{SEL-ADJ}$ | Resistor range for valid adjustable output voltage selection at startup | | 8 | | 50 | kΩ |
| **INTERNAL LDO** | | | | | | |
| $V_{CC}$ | Internal VCC voltage | 6 V ≤ $V_{IN}$ ≤ Max Operating $V_{IN}$ | 4.75 | 5 | 5.25 | V |
| $V_{CCM}$ | VCC Clamp Voltage | 1mA sourced into VCC | 5.25 | 5.55 | 5.8 | V |
| **VOLTAGE REFERENCE (FB PIN)** | | | | | | |
| $V_{FB_ADJ}$ | Feedback voltage | $V_{IN}$ = 3.5-Max Operating $V_{IN}$ | 0.985 | 1 | 1.015 | V |
| $V_{FB_5V}$ | Feedback voltage | $V_{IN}$ = 5.5-Max Operating $V_{IN}$ | 4.925 | 5 | 5.075 | V |
| $V_{FB_3p3V}$ | Feedback voltage | $V_{IN}$ = 3.8-Max Operating $V_{IN}$ | 3.25 | 3.3 | 3.35 | V |
| $I_{FB_ADJ}$ | Input leakage current at FB PIN | FB = 1.0 V | | 0.2 | 100 | nA |
| $I_{FB_5V}$ | Input leakage current at FB PIN | FB = 5.0 V | | 2.89 | 3.4 | µA |
| $I_{FB_3p3V}$ | Input leakage current at FB PIN | FB = 3.3V | | 1.67 | 2 | µA |
| **CURRENT LIMITS** | | | | | | |
| $I_{SC}$ | Short circuit high side current Limit | 1-A Version | 1.9 | 2.25 | 2.7 | A |
| $I_{LS-LIMIT}$ | Low side current limit | | 1.5 | 1.8 | 2.12 | A |
| $I_{PEAK-MIN}$ | Minimum Peak Inductor Current | | | 0.375 | 0.7 | A |
| $I_{L-NEG}$ | Negative current limit | | –1.49 | –1.2 | –0.75 | A |
| $V_{HICCUP}$ | Hiccup threshold on FB pin | | 37% | 42% | 47% | |
| **POWER GOOD ($\overline{\text{RESET}}$ PIN)** | | | | | | |
| $V_{\overline{RESET}-HIGH}$ | $\overline{\text{RESET}}$ upper threshold - Rising | % of FB voltage | 110% | 112% | 115% | |
| $V_{\overline{RESET}-LOW}$ | $\overline{\text{RESET}}$ lower threshold - Falling | % of FB voltage | 91% | 93% | 95% | |
| $V_{\overline{RESET}-HYS}$ | $\overline{\text{RESET}}$ hysteresis | % of FB voltage, | 1.1% | 1.8% | 2.5% | |
| $V_{\overline{RESET}_VALID}$ | Minimum input voltage for proper PG function | Measured when $V_{\overline{RESET}}$ < 0.4 V with 10kOhm pullup to external 5-V | 0.7 | 1.04 | 1.25 | V |
| $R_{\overline{RESET}}$ | $\overline{\text{RESET}}$ ON resistance, | $V_{EN}$ = 5.0 V, 1mA pull-up current | | 60 | 150 | Ω |

(1) MIN and MAX limits are 100% production tested at 25ºC. Limits over the operating temperature range verified through correlation using Statistical Quality Control (SQC) methods. Limits are used to calculate Average Outgoing Quality Level (AOQL).
(2) This is the current used by the device open loop. It does not represent the total input current of the system when in regulation.


Copyright © 2020, Texas Instruments Incorporated

## Electrical Characteristics (continued)

Limits apply over the junction temperature ($T_J$) range of –40°C to +150°C, unless otherwise stated. Minimum and maximum limits are specified through test, design or statistical correlation. Typical values represent the most likely parametric norm at $T_J$ = 25°C, and are provided for reference purposes only. Unless otherwise stated, the following conditions apply: $V_{IN}$ = 13.5 V.(1)

| PARAMETER | | TEST CONDITIONS | MIN | TYP | MAX | UNIT |
|---|---|---|---|---|---|---|
| $R_{\overline{RESET}}$ | $\overline{RESET}$ ON resistance, | $V_{EN}$ = 0 V, 1mA pull-up current | | 40 | 125 | Ω |
| **OSCILLATOR (SYNC/MODE PIN)** | | | | | | |
| $V_{SYNC-HIGH}$ | Sync input and mode high level threshold | | | 1.5 | 1.8 | V |
| $V_{SYNC-HYS}$ | Sync input hysteresis | | | 0.355 | | V |
| $V_{SYNC-LOW}$ | Sync input and mode low level threshold | | 0.8 | 1.15 | | V |
| $R_{SYNC}$ | Pulldown on MODE pin | | | 100 | | kΩ |
| **MOSFETS(2)** | | | | | | |
| $R_{DS-ON-HS}$ | High-side MOSFET on-resistance | Load = 1 A | | 93 | | mΩ |
| $R_{DS-ON-LS}$ | Low-side MOSFET on-resistance | Load = 1 A | | 61 | | mΩ |
| $V_{CBOOT-UVLO}$ | Cboot - SW UVLO threshold(3) | | | 2.13 | | V |

(3) When the voltage across the $C_{BOOT}$ capacitor falls below this voltage, the low side MOSFET is turn to recharge the boot capacitor

## 7.6 Timing Characteristics

Limits apply over the junction temperature ($T_J$) range of –40°C to +150°C, unless otherwise stated. Minimum and maximum limits are specified through test, design or statistical correlation. Typical values represent the most likely parametric norm at $T_J$ = 25°C, and are provided for reference purposes only. Unless otherwise stated, the following conditions apply: $V_{IN}$ = 13.5 V.(1)

| PARAMETER | | TEST CONDITIONS | MIN | TYP | MAX | UNIT |
|---|---|---|---|---|---|---|
| **CURRENT LIMITS AND HICCUP** | | | | | | |
| $N_{OC}$ | Number of switching current limit continuous events before hiccup is tripped | | | 128 | | Cycles |
| $t_{OC}$ | Overcurrent hiccup retry delay time | | 70 | 104 | 140 | ms |
| $t_{OC_active}$ | Time after soft start done timer before hiccup current protection is enabled | | 11 | 16 | 22 | ms |
| **SOFT START** | | | | | | |
| $t_{SS}$ | Internal soft-start time | | 1 | 1.6 | 2.2 | ms |
| $t_{SS_DONE}$ | Soft-start done timer | | 5 | 8 | 11 | ms |
| **POWER GOOD (/RESET PIN) and OVERVOLTAGE PROTECTION** | | | | | | |
| $t_{dg}$ | $\overline{\text{RESET}}$ edge deglitch delay | | 10 | 17 | 30 | µs |
| $t_{RISE-DELAY}$ | $\overline{\text{RESET}}$ active time | Time FB must be valid before $\overline{\text{RESET}}$ is released. | 2 | 3 | 5 | ms |
| **OSCILLATOR (SYNC/MODE PIN)** | | | | | | |
| $t_{ON_OFF-SYNC}$ | Sync input ON and OFF-time | | 100 | | | ns |

(1) MIN and MAX limits are 100% production tested at 25°C. Limits over the operating temperature range are verified through correlation usingStatistical Quality Control (SQC) methods. Limits are used to calculate Average Outgoing Quality Level (AOQL).


Copyright © 2020, Texas Instruments Incorporated

## 7.7 Switching Characteristics

Limits apply over the junction temperature ($T_J$) range of –40°C to +150°C, unless otherwise stated. Minimum and maximum limits are specified through test, design or statistical correlation. Typical values represent the most likely parametric norm at $T_J$ = 25°C, and are provided for reference purposes only. Unless otherwise stated, the following conditions apply: $V_{IN}$ = 13.5 V.(1)

| PARAMETER | | TEST CONDITIONS | MIN | TYP | MAX | UNIT |
|---|---|---|---|---|---|---|
| **PWM LIMITS (SW PINS)** | | | | | | |
| $t_{ON-MIN}$ | Minimum switch on-time | $V_{IN}$ =12 V, $I_{SW}$ = 1 A | | 50 | 75 | ns |
| $t_{OFF-MIN}$ | Minimum switch off-time | $V_{IN}$ = 5 V | | 50 | 100 | ns |
| $t_{ON-MAX}$ | Maximum switch on-time | HS timeout in dropout | 5.4 | 7 | 10 | µs |
| **OSCILLATOR (RT and SYNC PINS)** | | | | | | |
| $f_{OSC}$ | Internal oscillator frequency | RT = GND | 1.85 | 2.1 | 2.35 | MHz |
| $f_{OSC}$ | Internal oscillator frequency | RT = VCC | 360 | 400 | 440 | kHz |
| $f_{ADJ1}$ | | RT = 66.5 kΩ, 1% | | 240 | | kHz |
| $f_{ADJ2}$ | | RT = 7.15 kΩ, 1% | | 2200 | | kHz |
| $f_{SYNC}$ | Synchronization Frequency Range | | 250 | | 2200 | kHz |
| **SPREAD SPECTRUM** | | | | | | |
| $f_{PSS}$ (2) | Spread spectrum pseudo random pattern frequency | FOSC= 2.1MHz | | 0.98 | | Hz |
| $f_{SPREAD}$ | Spread of internal oscillator with Spread Spectrum Enabled | LM636x5DQ Option (HTSSOP package) | –3.6% | | 3.6% | |
| $f_{SPREAD}$ | Spread of internal oscillator with Spread Spectrum Enabled | LM636x5DQ Option (WSON package) | –5% | | 5% | |

(1) MIN and MAX limits are 100% production tested at 25°C. Limits over the operating temperature range are verified through correlation usingStatistical Quality Control (SQC) methods. Limits are used to calculate Average Outgoing Quality Level (AOQL).

## 7.8 System Characteristics

The following specifications apply only to the typical applications circuit with nominal component values. Specifications in the typical (TYP) column apply to $T_J$ = 25°C only. Specifications in the minimum (MIN) and maximum (MAX) columns apply to the case of typical components over the temperature range of $T_J$ = –40°C to 150°C. These specifications are not ensured by production testing.

| PARAMETER | | TEST CONDITIONS | MIN | TYP | MAX | UNIT |
|---|---|---|---|---|---|---|
| **SUPPLY VOLTAGE (VIN PIN)** | | | | | | |
| $I_{SUPPLY}$ | Input supply current when in regulation | $V_{IN}$ = 12 V, $V_{OUT}$ = 3.3 V, $I_{OUT}$ = 0 A, $R_{FBT}$ = 1 MΩ | | 23 | | µA |
| $V_{DROP}$ | Dropout voltage; ($V_{IN}$ – $V_{OUT}$) | $V_{OUT}$ = 5 V, $I_{OUT}$ = 1 A, $f_{SW}$ = 1850 kHz | | 0.95 | | V |
| $V_{DROP}$ | Dropout voltage; ($V_{IN}$ – $V_{OUT}$) | $V_{OUT}$ = 5 V, $I_{OUT}$ = 1 A, $V_{OUT}$ -1% of regulation, $f_{SW}$ = 140 kHz | | 150 | | mV |
| $D_{MAX}$ | Maximum switch duty cycle(1) | $V_{IN}$ = $V_{OUT}$ = 12 $V_{OUT}$ = 1 A | | 98% | | |
| **VOLTAGE REFERENCE (FB PIN)** | | | | | | |
| $V_{OUT}$(2) | $V_{OUT}$ = 5 V | $V_{IN}$ = 7 V to 30 V , $I_{OUT}$ = 1 A to full load, CCM | –1.5% | | 1.5% | |
| | $V_{OUT}$ = 5 V | $V_{IN}$ = 7 V to 30 V, $I_{OUT}$ = 0 A to full load, AUTO mode | –1.5% | | 2.5% | |
| $V_{OUT}$(2) | $V_{OUT}$ = 3.3 V | $V_{IN}$ = 3.8 V to 30 V , $I_{OUT}$ = 1 A to full load, CCM | –1.5% | | 1.5% | |
| | $V_{OUT}$ = 3.3 V | $V_{IN}$ = 3.8 V to 30 V , $I_{OUT}$ = 0 A to full load, AUTO mode | –1.5% | | 2.5% | |
| $t_{SYNC-L}$ | Delay from sync clock staying low to PFM entry | | | 100 | | ns |
| $t_{SYNC-H}$ | Delay from sync clock staying high to default frequency | | | 100 | | ns |
| **THERMAL SHUTDOWN** | | | | | | |
| $T_{SD}$ | Thermal shutdown temperature | Shutdown temperature | 155 | 163 | 175 | °C |
| $T_{SDR}$ | Thermal shutdown temperature | Recovery temperature | | 150 | | °C |

(1) In dropout the switching frequency drops to increase the effective duty cycle. The lowest frequency is clamped at approximately: $f_{MIN}$ = 1 / ($t_{ON-MAX}$ + $T_{OFF-MIN}$). $D_{MAX}$ = $t_{ON-MAX}$ /($t_{ON-MAX}$ + $t_{OFF-MIN}$).
(2) Deviation is with respect to $V_{IN}$ =13.5 V, $I_{OUT}$ = 1 A.


Copyright © 2020, Texas Instruments Incorporated

## 7.9 Typical Characteristics

Unless otherwise specified the following conditions apply: $T_A$ = 25°C, $V_{IN}$ = 13.5 V

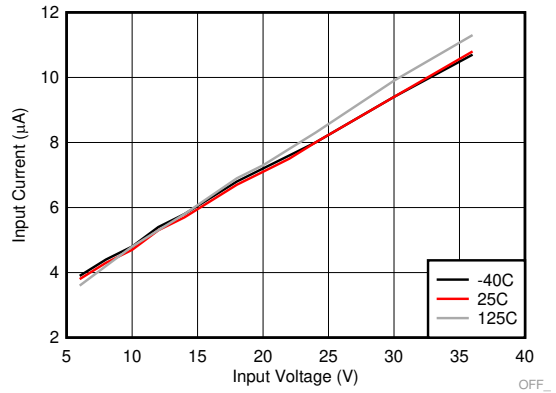


EN = 0 V

**Figure 1. Input Supply Current in Shutdown Mode**

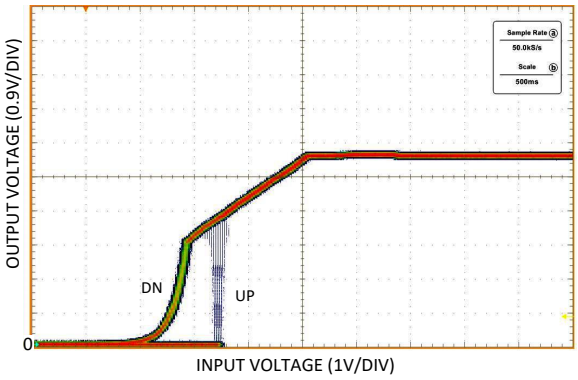


$I_{OUT}$ = 1 mA

See Figure 38

**Figure 2. UVLO Thresholds**

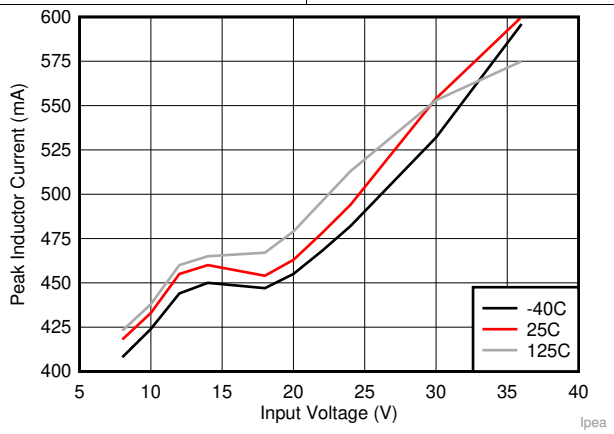


$I_{OUT}$ = 0 A
$f_{SW}$ = 2100 kHz

$V_{OUT}$ = 5 V

See Figure 38

**Figure 3. $I_{PEAK-MIN}$ for LM63610**

# 8 Detailed Description

## 8.1 Overview

The LM63610-Q1 devices are synchronous peak-current-mode buck regulators designed for a wide variety of automotive applications. The regulators automatically switch modes between PFM and PWM, depending on load. At heavy loads, the devices operate in PWM at a constant switching frequency. At light loads, the mode changes to PFM with diode emulation, allowing DCM. This reduces the input supply current and keeps efficiency high. The device features the following:

- Adjustable switching frequency
- Forced PWM mode (FPWM)
- Frequency synchronization
- Selectable output voltage

The $\overline{\text{RESET}}$ output allows easy system sequencing. In addition, internal compensation reduces design time and requires fewer external components than externally compensated regulators.

## 8.2 Functional Block Diagram

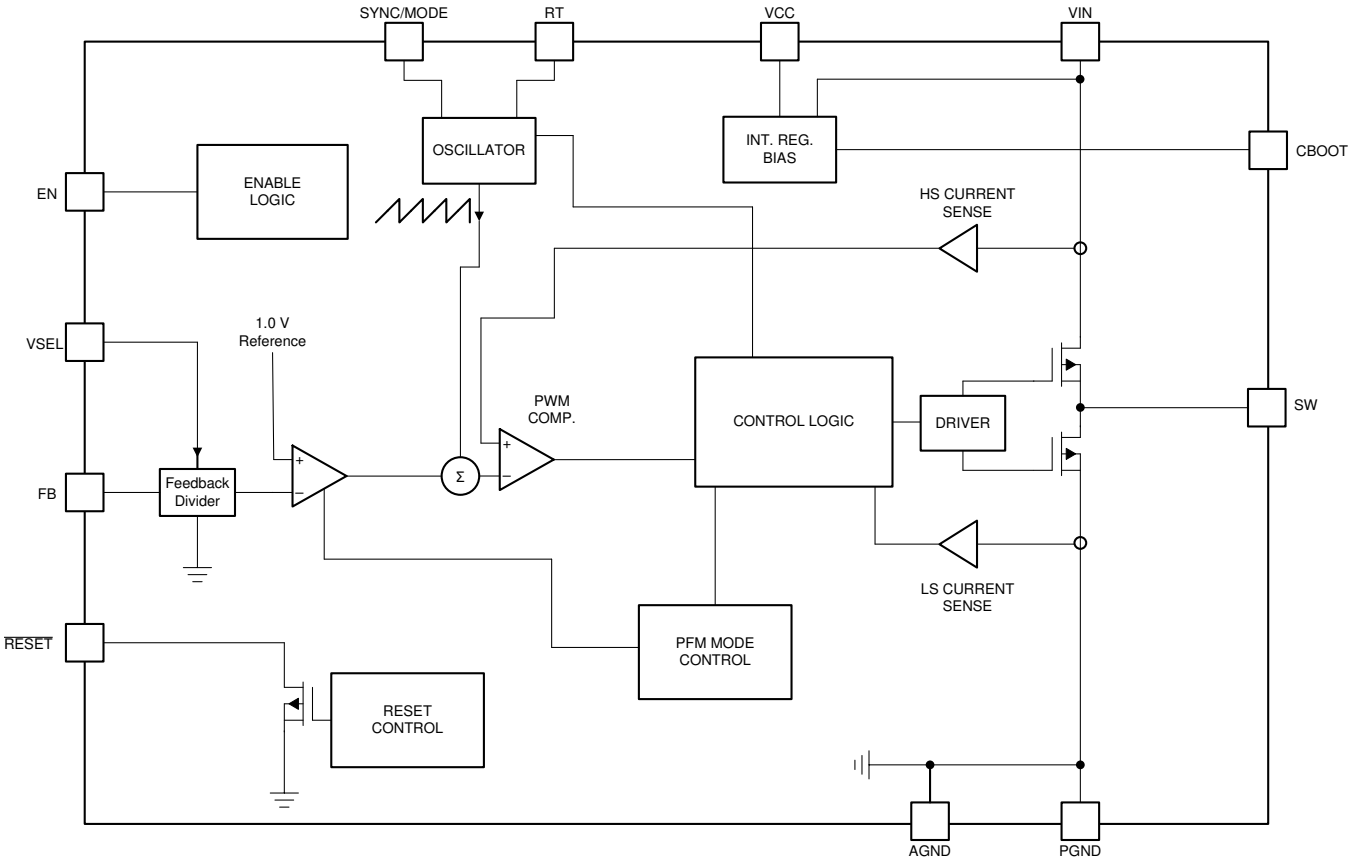


## 8.3 Feature Description

### 8.3.1 Sync/Mode Selection

The device features selectable operating modes through the SYNC/MODE input. Table 1 shows the selection programming. Mode changes can be made *on the fly* anytime after the device is powered up. It is not recommended that this input be allowed to float, however, an internal 100 kΩ pulls the input to ground if left floating. The value of this internal resistor and the logic thresholds for this input can be found in the . See the *Device Functional Modes* section for details of the operating modes.


Copyright © 2020, Texas Instruments Incorporated

## Feature Description (continued)

**Table 1. Mode Selection Settings**

| SYNC/MODE INPUT | MODE |
|---|---|
| VCC | FPWM |
| AGND | AUTO |
| Synchronizing clock | FPWM; synchronized to external clock |
| Float (not recommended) | AUTO |

### 8.3.2 Output Voltage Selection

The output voltage of the device is set by the condition of the VSEL input. The condition of this input is tested when the device is first enabled. Once the converter is running, the voltage selection is fixed and cannot be changed until the next power-on cycle. Table 2 shows the selection programming. The device contains an integrated voltage divider connected to the FB input. The converter regulates the voltage on the FB input to 5 V, 3.3 V, or 1 V, as selected. In the ADJ mode, the voltage on the FB input is regulated to 1 V and the internal divider is disabled. In this case, an external voltage divider is used to set the desired output voltage anywhere within the recommended operating range. The ADJ mode is programmed by connecting a 10 kΩ from the VSEL input to ground. Although not recommenced, if this input is left floating, the device enters the ADJ mode. See the *Setting the Output Voltage* section for details of selecting the FB divider resistors.

See the *Specifications* for ensured specifications regarding the accuracy of the FB voltage and input current to the FB pin.

Providing internal voltage dividers for the 5-V and 3.3-V modes saves external components, reducing both board space and component cost. The relatively large values of the internal dividers reduce the load on the output, helping to improve the light load efficiency of the converter. In addition, since the divider is inside the device, it is less likely to pick up externally generated noise.

**Table 2. Output Voltage Settings**

| VSEL INPUT | OUTPUT VOLTAGE |
|---|---|
| VCC | 5 V |
| AGND | 3.3 V |
| 10 kΩ to AGND | ADJ |
| Float (not recommended) | ADJ |

### 8.3.3 Switching Frequency Selection

The switching frequency is set by the condition of the RT input. The condition of this input is tested when the device is first enabled. Once the converter is running, the switching frequency selection is fixed and cannot be changed until the next power-on cycle. Table 3 shows the selection programming. In the adjustable frequency mode, the switching frequency can be set between 250 kHz and 2200 kHz by proper selection of the value of $R_T$. The curve in Figure 4 indicates the required resistor value for $R_T$ to set a desired switching frequency. It is not recommended that this input be allowed to float; the switching action ceases with no generated output voltage under this condition.

Copyright © 2020, Texas Instruments Incorporated

$$RT = \frac{15770}{f_{SW}} \quad (1)$$

where

- RT = value of RT timing resistor in kΩ
- $f_{SW}$ = switching frequency in kHz

**Table 3. Switching Frequency Settings**

| RT INPUT | SWITCHING FREQUENCY |
|---|---|
| VCC | 400 kHz |
| AGND | 2100 kHz |
| $R_T$ to AGND | Adjustable according to $R_T$ value |
| Float (not recommended) | No switching |

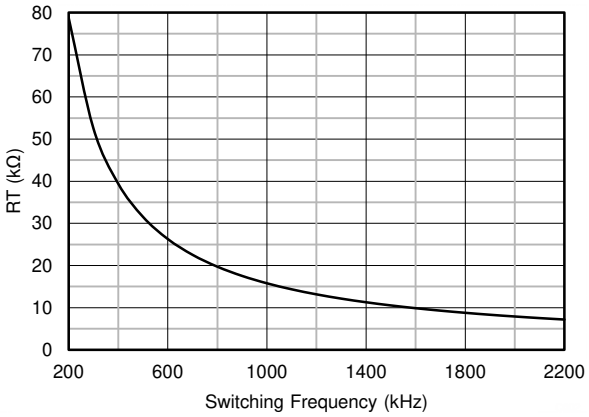


**Figure 4. Switching Frequency versus $R_T$**

#### *8.3.3.1 Spread Spectrum Option*

The LM63610-Q1 is available with a spread spectrum clock dithering feature. This feature uses a pseudo-random pattern to dither the internal clock frequency. The pattern repeats at a 0.98-Hz rate while the depth of modulation is ±3%.

The purpose of the spread spectrum is to eliminate peak emissions at specific frequencies by spreading emissions across a wider range of frequencies than a part with fixed frequency operation. In most systems containing the LM63610-Q1 devices, low frequency conducted emissions from the first few harmonics of the switching frequency can be easily filtered. A more difficult design criterion is reduction of emissions at higher harmonics which fall in the FM band. These harmonics often couple to the environment through electric fields around the switch node. The LM63610-Q1 devices use a ±3% spread of frequencies which spreads energy smoothly across the FM band but is small enough to limit subharmonic emissions below its switching frequency.

### 8.3.4 Enable and Start-up

Start-up and shutdown are controlled by the EN input. This input features precision thresholds, allowing the use of an external voltage divider to provide an adjustable input UVLO (see the *External UVLO* section). Applying a voltage greater than $V_{EN-VCC}$ causes the device to enter standby mode, powering the internal VCC, but not producing an output voltage. Increasing the EN voltage to $V_{EN-H}$ fully enables the device, allowing it to enter start-up mode and begin the soft-start period. When the EN input is brought below $V_{EN-L}$, the regulator stops running and enters standby mode. Further decrease in the EN voltage to below $V_{EN-VCC}$ completely shuts down the device. Figure 5 shows this behavior. The EN input can be connected directly to VIN if this feature is not needed. This input must not be allowed to float. The values for the various EN thresholds can be found in the *Specifications*.


Copyright © 2020, Texas Instruments Incorporated

The LM63610-Q1 uses a reference-based soft start that prevents output voltage overshoots and large inrush currents as the regulator is starting up. Once EN goes high, there is a delay of about 1 ms before the soft-start period begins. The output voltage begins to rise and reaches the final value in about 1.5 ms ($t_{ss}$). After a delay of about 3 ms ($t_{rise-delay}$), the $\overline{\text{RESET}}$ flag goes high. During start-up, the device is not allowed to enter FPWM mode until the $t_{ss-done}$ time has elapsed. This time is measured from the rising edge of EN.

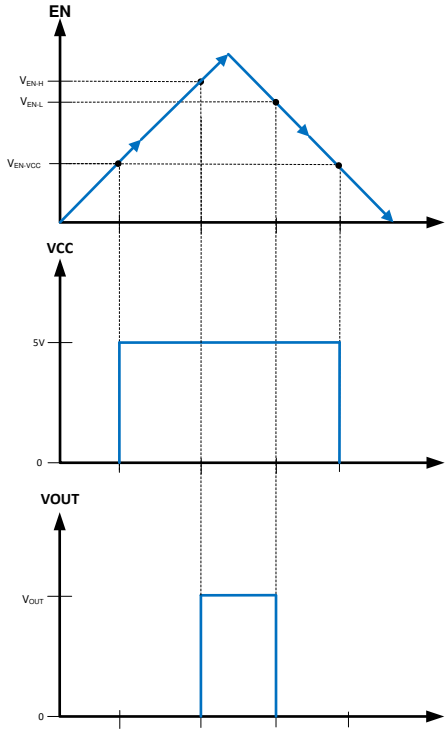


**Figure 5. Precision Enable Behavior**

### 8.3.5 $\overline{\text{RESET}}$ Flag Output

The $\overline{\text{RESET}}$ flag function ($\overline{\text{RESET}}$ output pin) of the LM63610-Q1 devices can be used to reset a system microprocessor whenever the output voltage is out of regulation. This open-drain output goes low under fault conditions, such as current limit and thermal shutdown, as well as during normal start-up. A glitch filter prevents false flag operation for short excursions of the output voltage, such as during line and load transients. Output voltage excursions lasting less than $t_{dg}$ do not trip the $\overline{\text{RESET}}$ flag. Once the FB voltage has returned to the regulation value and after a delay of $t_{rise-delay}$, the $\overline{\text{RESET}}$ flag goes high. $\overline{\text{RESET}}$ operation can best be understood by reference to Figure 6 and Figure 7.

The $\overline{\text{RESET}}$ output consists of an open-drain NMOS, requiring an external pullup resistor to a suitable logic supply. It can also be pulled up to either VCC or $V_{OUT}$ through an appropriate resistor, as desired. Pullup resistor values in the range of 10 kΩ to 100 kΩ are reasonable. If this function is not needed, the $\overline{\text{RESET}}$ pin can be left floating. When EN is pulled low, the flag output is also forced low. With EN low, $\overline{\text{RESET}}$ remains valid as long as the input voltage is ≥ 1.2 V (typical). Limit the current into the $\overline{\text{RESET}}$ flag pin to about 5 mA D.C. The maximum current is internally limited to about 50 mA when the device is enabled and about 65 mA when the device is disabled. The internal current limit protects the device from any transient currents that can occur when discharging a filter capacitor connected to this output.

Copyright © 2020, Texas Instruments Incorporated

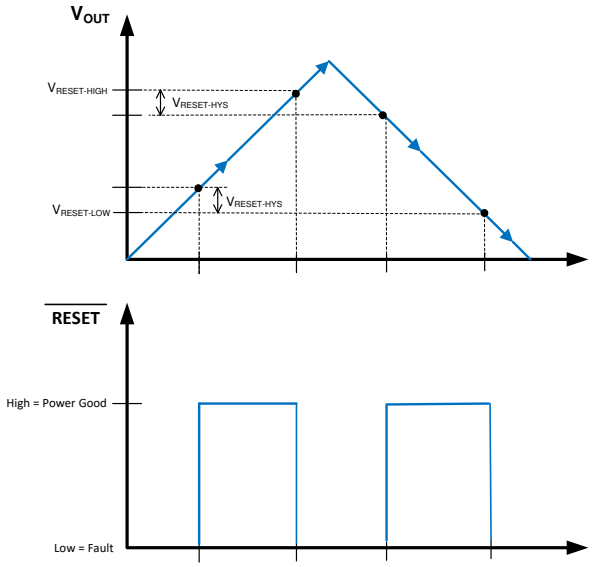


**Figure 6. Static $\overline{\text{RESET}}$ Operation**

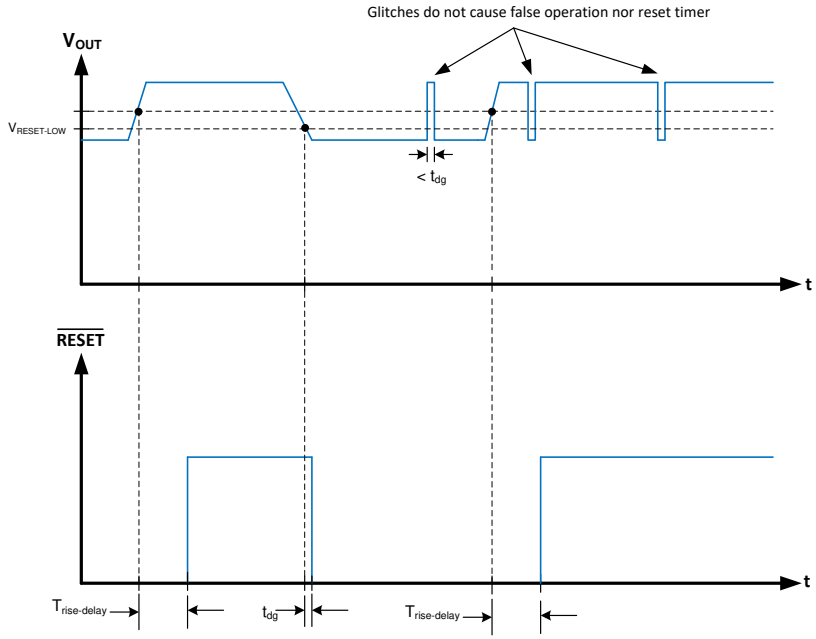


**Figure 7. $\overline{\text{RESET}}$ Timing Behavior**

### 8.3.6 Undervoltage Lockout and Thermal Shutdown and Output Discharge

The LM63610-Q1 incorporates an undervoltage-lockout feature on the output of the internal LDO (at the VCC pin). When $V_{IN}$ reaches about ($V_{POR-R}$), the device is ready to receive an EN signal and start up. When $V_{IN}$ falls below ($V_{POR-F}$), the device shuts down, regardless of EN status. Since the LDO is in dropout during these transitions, the above values roughly represent the VCC voltage levels during the transitions.

Thermal shutdown is provided to protect the regulator from excessive junction temperature. When the junction temperature reaches about 163°C, the device shuts down; re-start occurs when the temperature falls to about 150°C. An extended input voltage UVLO can also be accomplished as shown in the *External UVLO* section.


Copyright © 2020, Texas Instruments Incorporated

The LM63610-Q1 features an output voltage discharge FET connected from the SW pin to ground. This FET is activated when the EN input is below $V_{EN-L}$, or when the output voltage exceeds $V_{RESET-HIGH}$. This way, the output capacitors are discharged through the power inductor. At output voltages above about 5 V, the discharge current is approximately constant at $I_{POR}$ or about 1.4 mA. Below this voltage, the FET characteristic looks approximately resistive at a value of 2.5 kΩ.

## 8.4 Device Functional Modes

### 8.4.1 Overview

In typical usage, the device is put in AUTO mode (SYNC/MODE pin = ground). In AUTO mode, the device moves between PWM and PFM as the load changes. At light loads, the regulator operates in PFM where the switching frequency is varied to regulate the output voltage. At higher loads, the mode changes to PWM with the switching frequency set by the condition of the RT pin (see the *Switching Frequency Selection* section).

In PWM mode, the regulator operates as a current mode, the constant frequency converter using PWM to regulate the output voltage. While operating in this mode, the output voltage is regulated by switching at a constant frequency and modulating the duty cycle to control the power to the load. This provides excellent line and load regulation and low output voltage ripple.

In PFM mode, the high-side MOSFET is turned on in a burst of one or more pulses to provide energy to the load. The duration of the burst depends on how long it takes the inductor current to reach $I_{PEAK-MIN}$. The periodicity of these bursts is adjusted to regulate the output, while diode emulation (DEM) is used to maximize efficiency (see the *Glossary*). This mode provides high light-load efficiency by reducing the amount of input supply current required to regulate the output voltage at small loads. This trades off very good light-load efficiency for larger output voltage ripple and variable switching frequency. Also, a small increase in output voltage occurs at light loads. See the *Application Curves* for output voltage variation with load in PFM mode. Figure 8 and show the typical switching waveforms in PFM and PWM.

There are four cases where the switching frequency does not conform to the condition set by the RT pin:

- Light load operation (AUTO mode)
- Dropout
- Minimum on-time operation
- Current limit

Under all of these cases, the switching frequency *folds back*, meaning it is less than that programmed by the RT control pin. During these conditions, by definition, the output voltage remains in regulation, except for current limit operation.

When the device is placed in the forced PWM mode (FPWM), the switching frequency remains constant as programmed by the RT pin for all load conditions. This mode essentially turns off the light-load PFM frequency foldback mode detailed in the *Light Load Operation* section. See the *Sync/Mode Selection* and *Sync/FPWM Operation* sections for details.

Copyright © 2020, Texas Instruments Incorporated

## Device Functional Modes (continued)

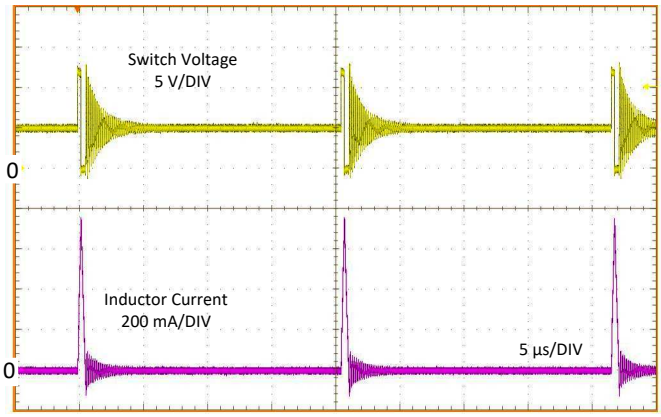


**Figure 8. Typical PFM Switching Waveforms**
**$V_{IN}$ = 12 V, $V_{OUT}$ = 5 V, $I_{OUT}$ = 10 mA**

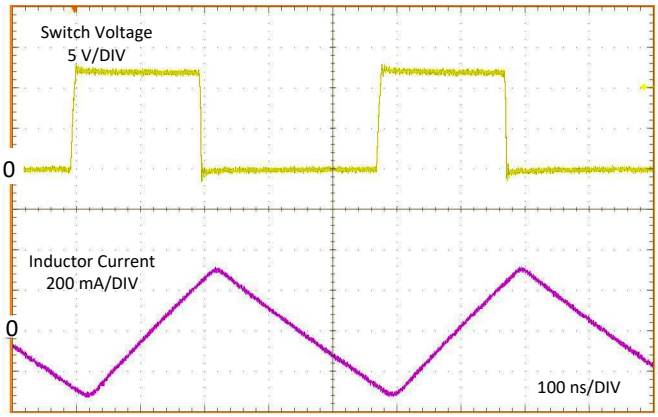


**Figure 9. Typical PWM Switching Waveforms FPWM**
**$V_{IN}$ = 12 V, $V_{OUT}$ = 5 V, $I_{OUT}$ = 0 A, $f_{SW}$ = 2100 kHz**

### 8.4.2 Light Load Operation

During light load operation, the device is in PFM mode with DEM. This provides high efficiency at the lower load currents. The actual switching frequency and output voltage ripple depend on the input voltage, output voltage, and load. The output current at which the device moves in and out of PFM can be found in the *Application Curves*. The output current for mode change depends on the input voltage, inductor value, and the programmed switching frequency. The curves apply for the BOM shown in Table 6. At higher programmed switching frequencies, the load at which the mode change occurs is greater. For applications where the switching frequency must be known for a given condition, the transition between PFM and PWM must be carefully tested before the design is finalized. Alternatively, the mode can be set to FPWM.

#### *8.4.2.1 Sync/FPWM Operation*

The forced PWM mode (FPWM) can be used to turn off AUTO mode and force the device to switch at the frequency programmed by the RT pin, even for small loads. This has the disadvantage of lower efficiency at light loads.

When a valid clock signal is present on the SYNC/MODE input, the switching frequency is locked to the external clock. The device mode is also FPWM. The mode can be changed dynamically by the system. See Figure 10 and Figure 11 for typical examples of SYNC/MODE function changes.


Copyright © 2020, Texas Instruments Incorporated

## Device Functional Modes (continued)

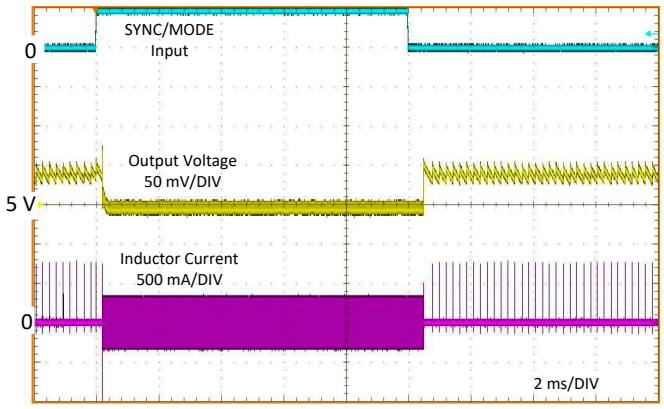


**Figure 10. Typical Transition from FPWM to AUTO Mode**
**$V_{IN}$ = 12 V, $V_{OUT}$ = 5 V, $I_{OUT}$ = 1 mA**

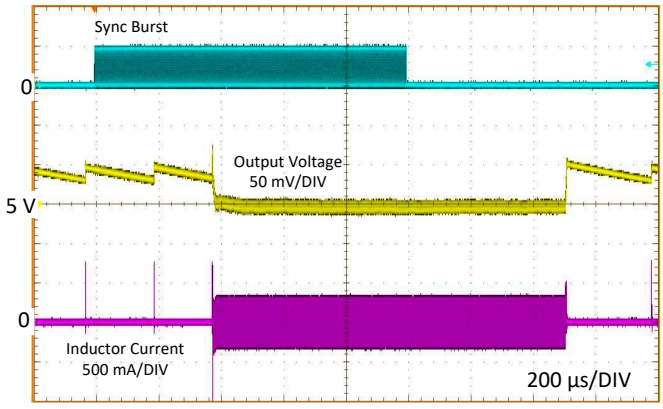


**Figure 11. Typical Transition from Sync Mode to FPWM Mode**
**$V_{IN}$ = 12 V, $V_{OUT}$ = 5 V, $I_{OUT}$ = 1 mA**

### 8.4.3 Dropout Operation

The dropout performance of any buck regulator is affected by the $R_{DSON}$ of the power MOSFETs, the DC resistance of the inductor, and the maximum duty cycle that the controller can achieve. As the input voltage level approaches the output voltage, the off-time of the high-side MOSFET starts to approach the minimum value (see the *Specifications*). Beyond this point, the switching can become erratic and the output voltage can fall out of regulation. To avoid this problem, the LM63610-Q1 automatically reduces the switching frequency to increase the effective duty cycle and maintain regulation. There are two definitions of *dropout* voltage used in this data sheet. For both definitions, the dropout voltage is the difference between the input and output voltage under a specific condition. For the first definition, the difference is taken when the switching frequency has dropped to 1850 kHz (obviously this applies to cases where the nominal switching frequency is >1850 kHz). For this condition, the output voltage is within regulation. For the second definition, the difference is taken when the output voltage has fallen by 1% of the nominal regulation value. In this condition, the switching frequency has reached the lower limit of about 130 kHz. See the *Application Curves* for details on these characteristics. Typical overall dropout characteristics can be found in Figure 12.

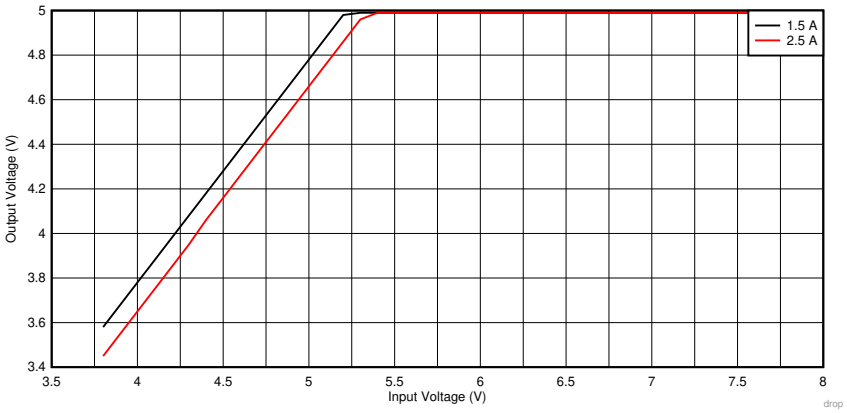


**Figure 12. Overall Dropout Characteristic**
**$V_{OUT}$ = 5 V, Refer to LM63615 and LM63625 Data Sheet**

## Device Functional Modes (continued)

### 8.4.4 Minimum On-time Operation

Every switching regulator has a minimum controllable on-time dictated by the inherent delays and blanking times associated with the control circuits. This imposes a minimum switch duty cycle and, therefore, a minimum conversion ratio. The constraint is encountered at high input voltages and low output voltages. To help extend the minimum controllable duty cycle, the LM63610-Q1 automatically reduces the switching frequency when the minimum on-time limit is reached. This way, the converter can regulate the lowest programmable output voltage at the maximum input voltage. Use Equation 2 to find an estimate for the approximate input voltage for a given output voltage before frequency foldback occurs. The values of $t_{ON}$ and $f_{SW}$ can be found in the *Specifications*. As the input voltage is increased, the switch on-time (duty-cycle) reduces to regulate the output voltage. When the on-time reaches the limit, the switching frequency drops while the on-time remains fixed. This relationship is highlighted in $f_{SW}$ *vs* $V_{IN}$ curves in the

*Application Curves* section.

$$V_{IN} \leq \frac{V_{OUT}}{t_{ON} \cdot f_{SW}} \tag{2}$$

### 8.4.5 Current Limit and Short-Circuit Operation

The LM63610-Q1 incorporates both peak and valley inductor current limits to provide protection to the device from overloads and short circuits and limit the maximum output current. Valley current limit prevents inductor current run-away during short circuits on the output, while both peak and valley limits work together to limit the maximum output current of the converter. A "hiccup" type mode is also incorporated for sustained short circuits. Finally, a zero current detector is used on the low-side power MOSFET to implement DEM at light loads (see the *Glossary*). The nominal value of this limit is about 0 A.

As the device is overloaded, a point is reached where the valley of the inductor current cannot reach below $I_{LS-LIMIT}$ before the next clock cycle. When this occurs, the valley current limit control skips that cycle, causing the switching frequency to drop. Further overload causes the switching frequency to continue to drop, but the output voltage remains in regulation. As the overload is increased, both the inductor current ripple and peak current increases until the high-side current limit, $I_{SC}$, is reached. When this limit is activated, the switch duty cycle is reduced and the output voltage falls out of regulation. This represents the maximum output current from the converter and is given approximately by Equation 3. The output voltage and switching frequency continue to drop as the device moves deeper into overload while the output current remains at approximately $I_{OMAX}$.

$$I_{OMAX} \approx \frac{I_{SC} + I_{LS-LIMIT}}{2} \tag{3}$$

If a severe overload or short circuit causes the FB voltage to fall below $V_{HICCUP}$, the convert enters "hiccup" mode. $V_{HICCUP}$ represents about 40% of the nominal programmed output voltage. In this mode, the device stops switching for $t_{OC}$, or about 100 ms and then goes through a normal restart with soft start. If the short-circuit condition remains, the device runs in current limit for a little longer than $t_{OC_active}$, or about 23 ms, and then shuts down again. This cycle repeats, as shown in Figure 13 as long as the short-circuit condition persists. This mode of operation reduces the temperature rise of the device during a sustained short on the output. The output current in this mode is approximately 20% of $I_{OMAX}$. Once the output short is removed and the $t_{OC}$ delay is passed, the output voltage recovers normally as shown in Figure 14.

See Figure 15 for the overall output voltage versus output current characteristic.


Copyright © 2020, Texas Instruments Incorporated

## Device Functional Modes (continued)

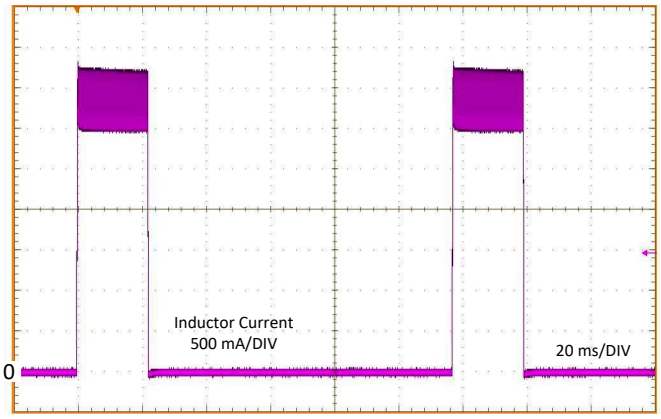


**Figure 13. Inductor Current Burst in Short-Circuit Mode; Refer to LM63615 and LM63625 Data Sheet**

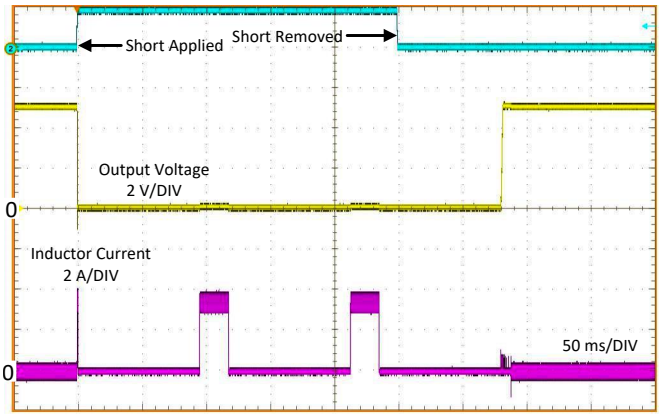


**Figure 14. Short-Circuit Transient and Recovery; Refer to LM63615 and LM63625 Data Sheet**

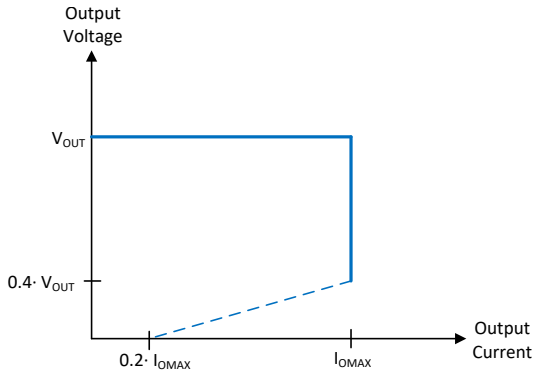


**Figure 15. Output Voltage versus Output Current in Current Limit**

# 9 Application and Implementation

**NOTE**

Information in the following applications sections is not part of the TI component specification, and TI does not warrant its accuracy or completeness. TI's customers are responsible for determining suitability of components for their purposes. Customers should validate and test their design implementation to confirm system functionality.

## 9.1 Application Information

The LM63610-Q1 step-down DC-to-DC converters are typically used to convert a higher DC voltage to a lower DC voltage with a maximum output current of 1 A. The following design procedure can be used to select components for the device.

**NOTE**

In this data sheet, the *effective* value of capacitance is defined as the actual capacitance under D.C. bias and temperature, not the rated or nameplate values. Use high-quality, low-ESR, ceramic capacitors with an X5R or better dielectric throughout. All high value ceramic capacitors have a large voltage coefficient in addition to normal tolerances and temperature effects. Under D.C. bias, the capacitance drops considerably. Large case sizes and higher voltage ratings are better in this regard. To help mitigate these effects, multiple capacitors can be used in parallel to bring the minimum *effective* capacitance up to the required value. This can also ease the RMS current requirements on a single capacitor. A careful study of bias and temperature variation of any capacitor bank must be made to ensure that the minimum value of *effective* capacitance is provided.

## 9.2 Typical Application

Figure 16 shows a typical application circuit for the device. This device is designed to function over a wide range of external components and system parameters. However, the internal compensation is optimized for a certain range of external inductance and output capacitance. As a quick start guide, see Table 4 and for typical component values.

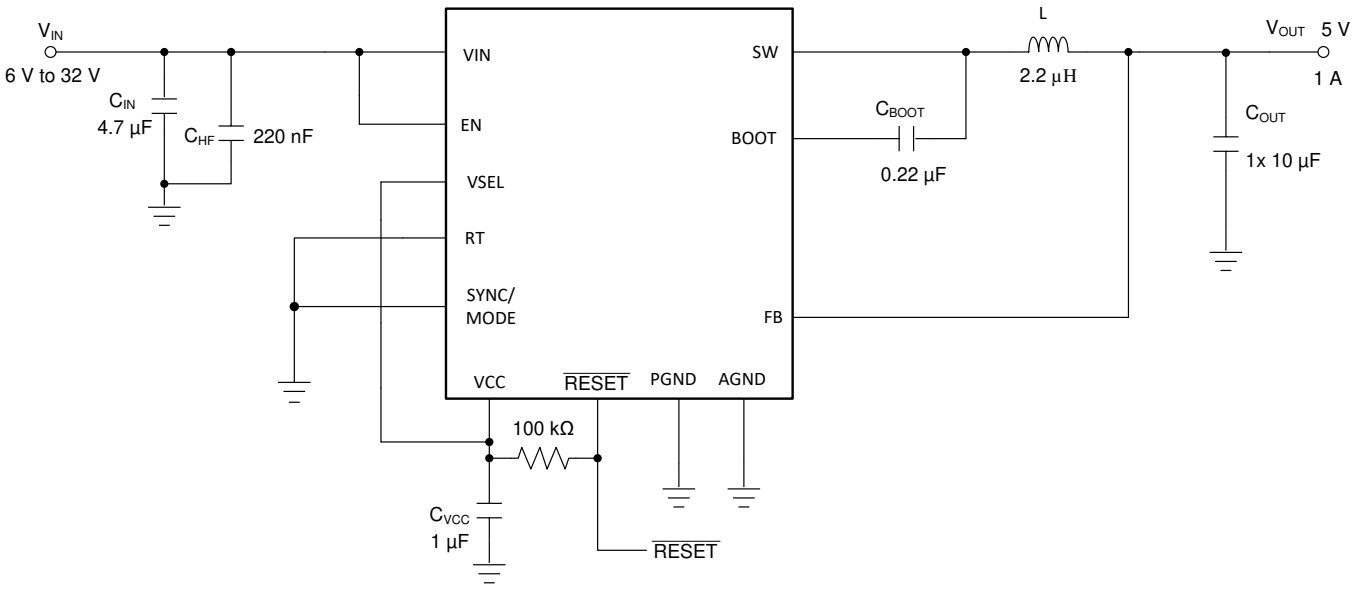


**Figure 16. Example Application Circuit**
**$V_{IN}$ = 12 V, $V_{OUT}$ = 5 V, $I_{OUT}$ = 1 A, $f_{SW}$ = 2.1 MHz**


Copyright © 2020, Texas Instruments Incorporated

## Typical Application (continued)

**Table 4. Typical External Component Values for 1-A Output Current**

| $f_{SW}$ (kHz) | $V_{OUT}$ | L (µH)(1) | TYPICAL(2) $C_{OUT}$ | MINIMUM(2) $C_{OUT}$ | VSEL | RT | $C_{IN}$ | $C_{BOOT}$ | $C_{VCC}$ |
|---|---|---|---|---|---|---|---|---|---|
| 400 | 3.3 | 10 | 4 × 10 µF | 2 × 10 µF | AGND | VCC | 4.7 µF + 220 nF | 220 nF | 1 µF |
| 2100 | 3.3 | 4.7 | 2 × 10 µF | 1 × 10 µF | AGND | AGND | 4.7 µF + 220 nF | 220 nF | 1 µF |
| 400 | 5 | 10 | 4 × 10 µF | 2 × 10 µF | VCC | VCC | 4.7 µF + 220 nF | 220 nF | 1 µF |
| 2100 | 5 | 4.7 | 2 × 10 µF | 1 × 10 µF | VCC | AGND | 4.7 µF + 220 nF | 220 nF | 1 µF |

(1) See the *Inductor Selection* section.
(2) See the *Output Capacitor Selection* section.

### 9.2.1 Design Requirements

Table 5 provides the parameters for the detailed design procedure:

**Table 5. Detailed Design Parameters**

| DESIGN PARAMETER | EXAMPLE VALUE |
|---|---|
| Input voltage | 12 V (6 V to 36 V) |
| Output voltage | 5 V |
| Maximum output current | 0 A to 1 A |
| Switching frequency | 2.1 MHz |

### 9.2.2 Detailed Design Procedure

The following design procedure applies to Figure 16 and Table 5.

#### *9.2.2.1 Choosing the Switching Frequency*

The choice of switching frequency is a compromise between conversion efficiency and overall solution size. Lower switching frequency implies reduced switching losses and usually results in higher system efficiency. However, higher switching frequency allows the use of smaller inductors and output capacitors, and hence, a more compact design. 2100 kHz was chosen for this example.

#### *9.2.2.2 Setting the Output Voltage*

The output voltage of the LM63610-Q1 is set by the condition of the VSEL input. This example requires a 5-V output, so the VSEL input is connected to VCC and the FB input is connected directly to the output capacitor.

For cases where the desired output voltage is other than 5 V or 3.3 V, an external feedback divider is required. As shown in Figure 17, the divider network is comprised of $R_{FBT}$ and $R_{FBB}$, and closes the loop between the output voltage and the converter. In this case, a 10-kΩ resistor is connected from the VSEL input go ground. The converter regulates the output voltage by holding the voltage on the FB pin equal to the internal reference voltage, 1 V. The resistance of the divider is a compromise between excessive noise pickup and excessive loading of the output. Smaller values of resistance reduce noise sensitivity, but also reduce the light-load efficiency. The recommended value for $R_{FBT}$ is 100 kΩ with a maximum value of 1 MΩ. If 1 MΩ is selected for $R_{FBT}$, then a feedforward capacitor must be used across this resistor to provide adequate loop phase margin (see the *$C_{FF}$ Selection* section). Once $R_{FBT}$ is selected, Equation 4 is used to select $R_{FBB}$. $V_{REF}$ is nominally 1 V.

$$R_{FBB} = \frac{R_{FBT}}{\left[\frac{V_{OUT}}{V_{REF}} - 1\right]} \quad (4)$$

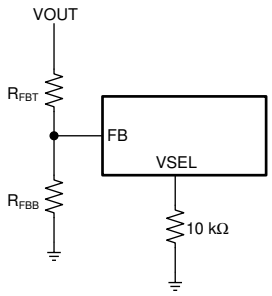


**Figure 17. Feedback Divider for Adjustable Output Voltage Setting**

#### 9.2.2.2.1 $C_{FF}$ Selection

In some cases, a feedforward capacitor can be used across $R_{FBT}$ to improve the load transient response or improve the loop-phase margin. This is especially true when values of $R_{FBT}$ > 100 kΩ are used. Large values of $R_{FBT}$ in combination with the parasitic capacitance at the FB pin can create a small signal pole that interferes with the loop stability. A $C_{FF}$ helps mitigate this effect. Equation 5 can be used to estimate the value of $C_{FF}$. The value found with Equation 5 is a starting point; use lower values to determine if any advantage is gained by the use of a $C_{FF}$ capacitor. The *Optimizing Transient Response of Internally Compensated DC-DC Converters with Feedforward Capacitor Application Report* is helpful when experimenting with a feedforward capacitor.

$$C_{FF} < \frac{V_{OUT} \cdot C_{OUT}}{120 \cdot R_{FBT} \cdot \sqrt{\frac{V_{REF}}{V_{OUT}}}} \tag{5}$$

### *9.2.2.3 Inductor Selection*

The parameters for selecting the inductor are the inductance and saturation current. The inductance is based on the desired peak-to-peak ripple current and is normally chosen to be in the range of 20% to 40% of the maximum output current. Experience shows that the best value for inductor ripple current is 30% of the maximum load current. Use the maximum device current when you select the ripple current for applications with much smaller maximum load than the maximum available from the device. Equation 6 can be used to determine the value of inductance. The constant K is the percentage of inductor current ripple. K = 0.3 was chosen for this example and L = 4.7 µH inductance was found.

$$L = \frac{(V_{IN} - V_{OUT})}{f_{SW} \cdot K \cdot I_{OUT\,max}} \cdot \frac{V_{OUT}}{V_{IN}} \tag{6}$$

Ideally, the saturation current rating of the inductor is at least as large as the high-side switch current limit, $I_{SC}$ (see the *Specifications*). This ensures that the inductor does not saturate even during a short circuit on the output. When the inductor core material saturates, the inductance falls to a very low value, causing the inductor current to rise very rapidly. Although the valley current limit, $I_{LIMIT}$, is designed to reduce the risk of current run-away, a saturated inductor can cause the current to rise to high values very rapidly. This can lead to component damage. Do not allow the inductor to saturate. Inductors with a ferrite core material have very *hard* saturation characteristics, but usually have lower core losses than powdered iron cores. Powered iron cores exhibit a *soft* saturation, allowing some relaxation in the current rating of the inductor. However, they have more core losses at frequencies above about 1 MHz. In any case, the inductor saturation current must not be less than the maximum peak inductor current at full load.

To avoid subharmonic oscillation, the inductance value must not be less than that given in Equation 7. The maximum inductance is limited by the minimum current ripple required for the current mode control to perform correctly. As a rule-of-thumb, the minimum inductor ripple current must be no less than about 10% of the device maximum rated current under nominal conditions.

$$L_{MIN} \geq M \cdot \frac{V_{OUT}}{f_{SW}} \tag{7}$$

where

- M = 0.69 for 1-A device


Copyright © 2020, Texas Instruments Incorporated

#### 9.2.2.4 Output Capacitor Selection

The value of the output capacitor and its ESR determine the output voltage ripple and load transient performance. The output capacitor bank is usually limited by the load transient requirements rather than the output voltage ripple. Use Equation 8 to estimate a lower bound on the total output capacitance, and an upper bound on the ESR, which are required to meet a specified load transient.

$$C_{OUT} \geq \frac{\Delta I_{OUT}}{f_{SW} \cdot \Delta V_{OUT} \cdot K} \cdot \left[ (1-D) \cdot (1+K) + \frac{K^2}{12} \cdot (2-D) \right]$$

$$ESR \leq \frac{(2+K) \cdot \Delta V_{OUT}}{2 \cdot \Delta I_{OUT} \left[ 1+K+\frac{K^2}{12} \cdot \left( 1+\frac{1}{(1-D)} \right) \right]}$$

$$D = \frac{V_{OUT}}{V_{IN}}$$

where

- $\Delta V_{OUT}$ = output voltage transient
- $\Delta I_{OUT}$ = output current transient
- K = ripple factor from the *Inductor Selection* section

(8)

Once the output capacitor and ESR have been calculated, use Equation 9 to check the peak-to-peak output voltage ripple, $V_r$.

$$V_r \cong \Delta I_L \cdot \sqrt{ESR^2 + \frac{1}{(8 \cdot f_{SW} \cdot C_{OUT})^2}}$$

(9)

The output capacitor and ESR can then be adjusted to meet both the load transient and output ripple requirements.

This example requires a $\Delta V_{OUT}$ of ≤ 150 mV for an output current step of $\Delta I_{OUT}$ = 1 A. Equation 8 gives a minimum value of 3.5 µF and a maximum ESR of 0.3 Ω. Assuming a 20% tolerance and a 10% bias de-rating, the user arrives at a minimum capacitance of 4.7 µF. This can be achieved with a 10-µF, 16-V, ceramic capacitors in the 1210 case size. More output capacitance can be used to improve the load transient response. Ceramic capacitors can easily meet the minimum ESR requirements. In some cases, an aluminum electrolytic capacitor can be placed in parallel with the ceramics to build up the required value of capacitance. When using a mixture of aluminum and ceramic capacitors, use the minimum recommended value of ceramics and add aluminum electrolytic capacitors as needed.

In general, use a capacitor rating of at least 10 V for output voltages of 3.3 V or less, and use a capacitor of 16 V or more for output voltages of 5 V and above.

The recommendations given in Table 4 and provide typical and minimum values of output capacitance for the given conditions. These values are the rated or nameplate figures. If the minimum values are to be used, the design must be tested over all of the expected application conditions, including input voltage, output current, and ambient temperature. This testing must include both bode plot and load transient assessments. The maximum value of total output capacitance must be limited to about 10 times the design value, or 1000 µF, whichever is smaller. Large values of output capacitance can adversely affect the start-up behavior of the regulator as well as the loop stability. If values larger than noted here must be used, then a careful study of start-up at full load and loop stability must be performed.

In practice, the output capacitor has the most influence on the transient response and loop phase margin. Load transient testing and bode plots are the best way to validate any given design and must always be completed before the application goes into production. In addition to the required output capacitance, a small ceramic placed on the output can reduce high frequency noise. Small case size ceramic capacitors in the range of 1 nF to 100 nF can help reduce spikes on the output caused by inductor and board parasitics.

Copyright © 2020, Texas Instruments Incorporated

#### 9.2.2.5 Input Capacitor Selection

The ceramic input capacitors provide a low impedance source to the regulator in addition to supplying the ripple current and isolating switching noise from other circuits. A minimum of 4.7 µF of ceramic capacitance is required on the input of the LM63610-Q1, connected directly between VIN and PGND. This must be rated for at least the maximum input voltage that the application requires; preferably twice the maximum input voltage. This capacitance can be increased to help reduce input voltage ripple and maintain the input voltage during load transients. More input capacitance is required for larger output currents. In addition, a small case size 220-nF ceramic capacitor must be used at the input as close a possible to the regulator, typically within 1 mm of the VIN and PGND pins. This provides a high frequency bypass for the control circuits internal to the device. For this example, a 4.7-µF, 50-V, X7R (or better) ceramic capacitor is chosen. The 220 nF must also be rated at 50 V with an X7R dielectric and preferably a small case size, such as an 0603.

Many times, it is desirable to use an electrolytic capacitor on the input in parallel with the ceramics. This is especially true if long leads or traces are used to connect the input supply to the regulator. The moderate ESR of this capacitor can help damp any ringing on the input supply caused by the long power leads. The use of this additional capacitor also helps with voltage dips caused by input supplies with unusually high impedance.

Most of the input switching current passes through the ceramic input capacitor or capacitors. Use Equation 10 to calculate the approximate RMS current. This value must be checked against the manufacturers' maximum ratings.

$$I_{RMS} \cong \frac{I_{OUT}}{2} \tag{10}$$

#### 9.2.2.6 $C_{BOOT}$

The LM63610-Q1 requires a bootstrap capacitor to be connected between the BOOT pin and the SW pin. This capacitor stores energy that is used to supply the gate drivers for the power MOSFETs. A high-quality ceramic capacitor of 220 nF and at least 16 V is required.

#### 9.2.2.7 VCC

The VCC pin is the output of the internal LDO used to supply the control circuits of the regulator. This output requires a 1-µF, 16-V ceramic capacitor connected from VCC to PGND for proper operation. In general, this output must not be loaded with any external circuitry. However, this output can be used to supply the pullup for the $\overline{\text{RESET}}$ function and as a logic supply for the various control inputs of the device. A value of 100 kΩ is a good choice for the $\overline{\text{RESET}}$ flag pullup resistor. The nominal output voltage on VCC is 5 V.

#### 9.2.2.8 External UVLO

In some cases, an input UVLO level different than that provided internal to the device is needed. This can be accomplished by using the circuit shown in Figure 18. The input voltage at which the device turns on is designated as $V_{ON}$ while the turnoff voltage is $V_{OFF}$. First, a value for $R_{ENB}$ is chosen in the range of 10 kΩ to 100 kΩ. Then, Equation 11 is used to calculate $R_{ENT}$ and $V_{OFF}$.

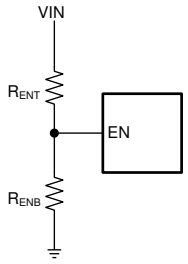


**Figure 18. Setup for External UVLO Application**


Copyright © 2020, Texas Instruments Incorporated

$$R_{ENT} = \left( \frac{V_{ON}}{V_{EN-H}} - 1 \right) \cdot R_{ENB}$$

$$V_{OFF} = V_{ON} \cdot \left( 1 - \frac{V_{EN-HYS}}{V_{EN-H}} \right)$$

where

- $V_{ON} = V_{IN}$ turnon voltage
- $V_{OFF} = V_{IN}$ turnoff voltage (11)

#### 9.2.2.9 Maximum Ambient Temperature

As with any power conversion device, the LM63610-Q1 dissipates internal power while operating. The effect of this power dissipation is to raise the internal temperature of the converter above ambient. The internal die temperature ($T_J$) is a function of the ambient temperature, the power loss, and the effective thermal resistance, $R_{\theta JA}$ of the device, and PCB combination. The maximum internal die temperature for the LM63610-Q1 must be limited to 150°C. This establishes a limit on the maximum device power dissipation and, therefore, the load current. Equation 12 shows the relationships between the important parameters. It is easy to see that larger ambient temperatures ($T_A$) and larger values of $R_{\theta JA}$ reduce the maximum available output current. The converter efficiency can be estimated by using the curves provided in this data sheet. Note that these curves include the power loss in the inductor. If the desired operating conditions cannot be found in one of the curves, then interpolation can be used to estimate the efficiency. Alternatively, the EVM can be adjusted to match the desired application requirements and the efficiency can be measured directly. The correct value of $R_{\theta JA}$ is more difficult to estimate. As stated in the *Semiconductor and IC Package Thermal Metrics Application Report*, the value of $R_{\theta JA}$ given in the *Thermal Information* is not valid for design purposes and must not be used to estimate the thermal performance of the application. The values reported in that table were measured under a specific set of conditions that are rarely obtained in an actual application. The data given for $R_{\theta JC(bott)}$ and $\Psi_{JT}$ can be useful when determining thermal performance. See the *Semiconductor and IC Package Thermal Metrics Application Report* for more information and the resources given at the end of this section.

$$I_{OUT}|_{MAX} = \frac{(T_J - T_A)}{R_{\theta JA}} \cdot \frac{\eta}{(1-\eta)} \cdot \frac{1}{V_{OUT}}$$

where

- $\eta$ = efficiency (12)

The effective $R_{\theta JA}$ is a critical parameter and depends on many factors such as the following:

- Power dissipation
- Air temperature/flow
- PCB area
- Copper heat-sink area
- Number of thermal vias under the package
- Adjacent component placement

The HTSSOP uses a die attach paddle, or "thermal pad" (DAP) to provide a place to solder down to the PCB heat-sinking copper. This provides a good heat conduction path from the regulator junction to the heat sink and must be properly soldered to the PCB heat sink copper. A typical example of $R_{\theta JA}$ versus copper board area can be found in Figure 19 and . The copper area given in the graph is for each layer. The top and bottom layers are 2-oz. copper each, while the inner layers are 1 oz. shows a typical curve of maximum output current versus ambient temperature. This data was taken with a device and PCB combination, giving an $R_{\theta JA}$ of about 30°C/W. Remember that the data given in these graphs are for illustration purposes only, and the actual performance in any given application depends on all of the previously mentioned factors.

Copyright © 2020, Texas Instruments Incorporated

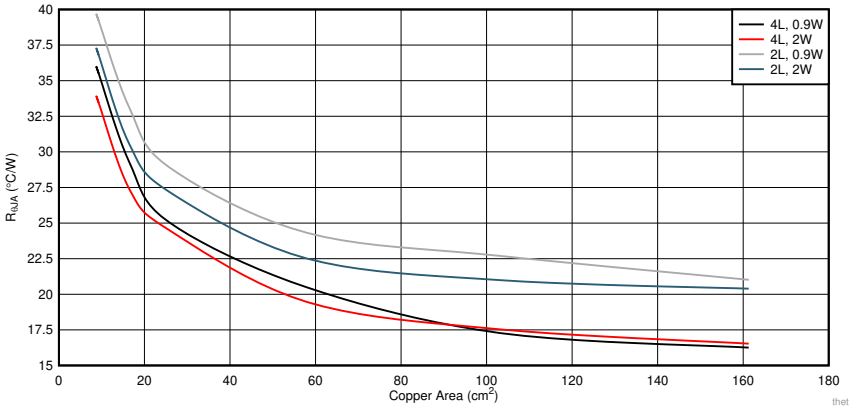


**Figure 19. Typical $R_{\theta JA}$ versus Copper Area for the HTSSOP Package**

The following resources can be used as a guide to optimal thermal PCB design and estimating $R_{\theta JA}$ for a given application environment:

- *AN-2020 Thermal Design By Insight, Not Hindsight Application Report*
- *A Guide to Board Layout for Best Thermal Resistance for Exposed Pad Packages Application Report*
- *Semiconductor and IC Package Thermal Metrics Application Report*
- *Thermal Design Made Simple with LM43603 and LM43602 Application Report*
- *Using New Thermal Metrics Application Report*


Copyright © 2020, Texas Instruments Incorporated

### 9.2.3 Application Curves

Unless otherwise specified, the following conditions apply: $V_{IN}$ = 13.5 V, $T_A$ = 25°C. Figure 38 shows the circuit with the appropriate BOM from Table 6.

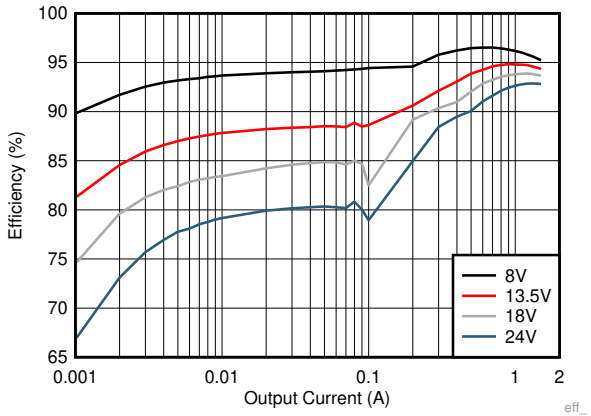


LM63610 $V_{OUT}$ = 5 V $f_{SW}$ = 400 kHz (AUTO)

**Figure 20. Efficiency**

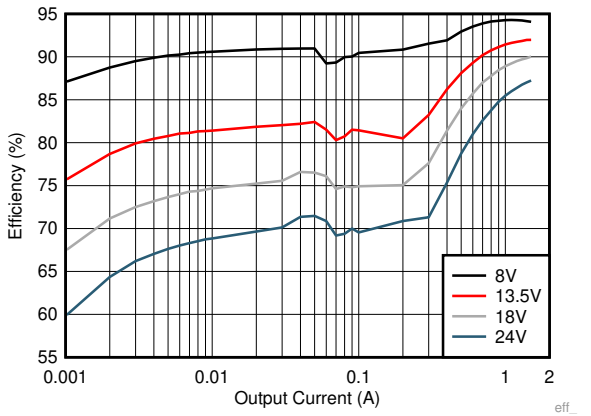


LM63610 $V_{OUT}$ = 5 V $f_{SW}$ = 2100 kHz (AUTO)

**Figure 21. Efficiency**

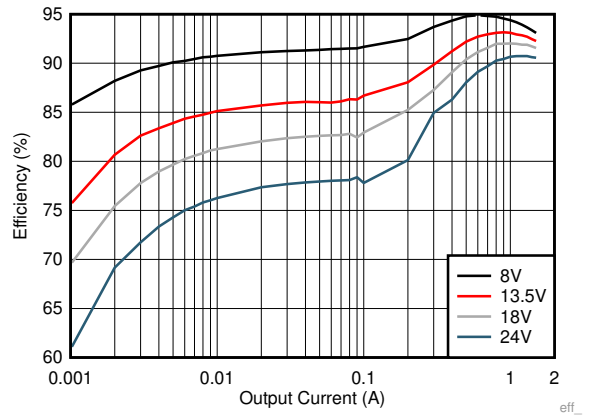


LM63610 $V_{OUT}$ = 3.3 V $f_{SW}$ = 400 kHz (AUTO)

**Figure 22. Efficiency**

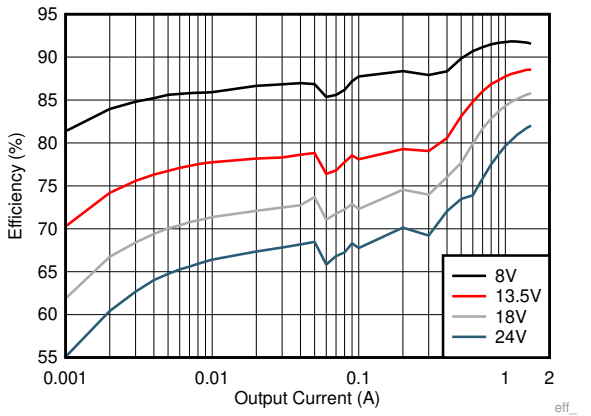


LM63610 $V_{OUT}$ = 3.3 V $f_{SW}$ = 2100 kHz (AUTO)

**Figure 23. Efficiency**

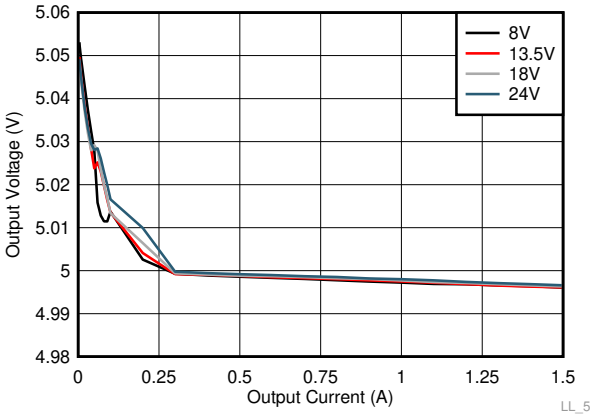


LM63610 $V_{OUT}$ = 5 V $f_{SW}$ = 2100 kHz (AUTO)

**Figure 24. Line and Load Regulation**

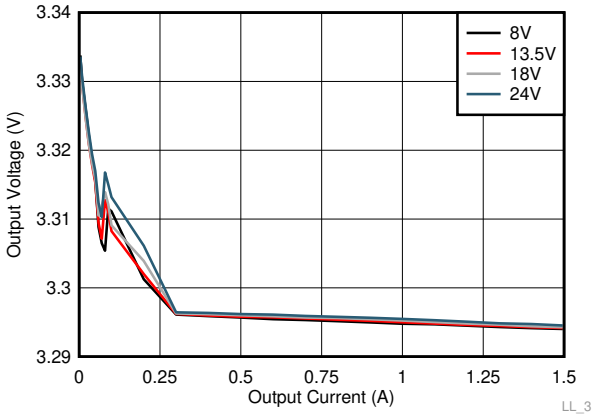


LM63610 $V_{OUT}$ = 3.3 V $f_{SW}$ = 2100 kHz (AUTO)

**Figure 25. Line and Load Regulation**

Copyright © 2020, Texas Instruments Incorporated

Unless otherwise specified, the following conditions apply: $V_{IN}$ = 13.5 V, $T_A$ = 25°C. Figure 38 shows the circuit with the appropriate BOM from Table 6.

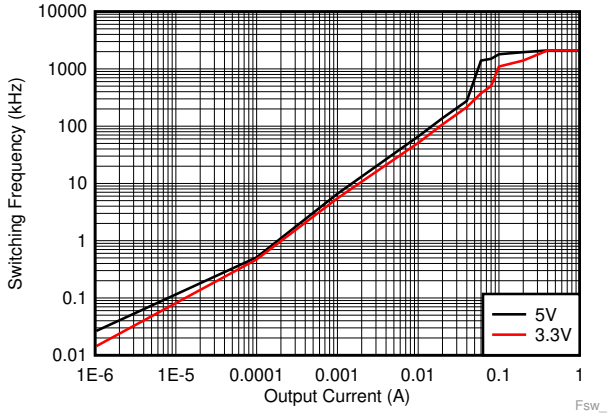


LM63610 $V_{IN}$ = 13.5 V $f_{SW}$ = 2100 kHz (AUTO)

**Figure 26. Switching Frequency versus Output Current**

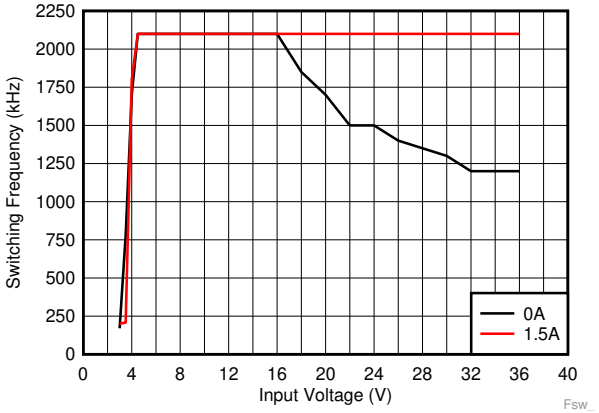


LM63610 $V_{OUT}$ = 3.3 V $f_{SW}$ = 2100 kHz (FPWM)

**Figure 27. Switching Frequency versus Input Voltage**

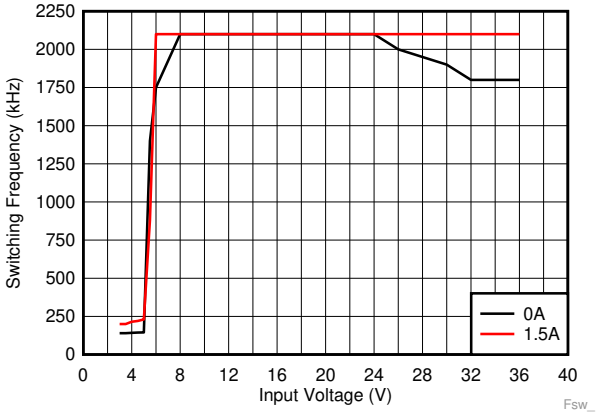


LM63610 $V_{OUT}$ = 5 V $f_{SW}$ = 2100 kHz (FPWM)

**Figure 28. Switching Frequency versus Input Voltage**

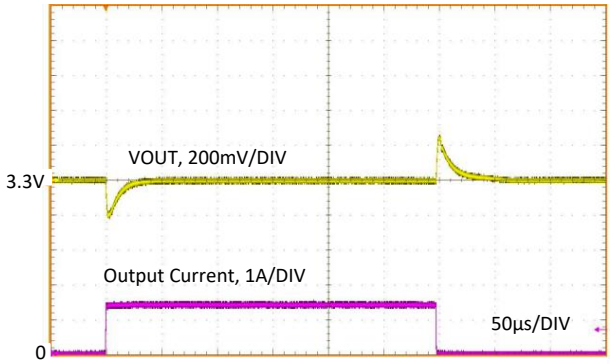


LM63610 0 A to 1.5 A, 2µs $V_{OUT}$ = 3.3 V FPWM $f_{SW}$ = 2100 kHz

**Figure 29. Load Transient**

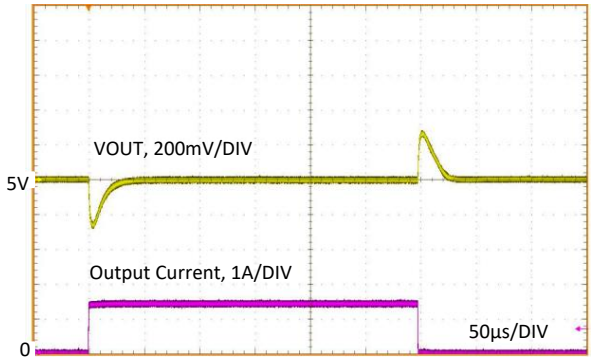


LM63610 0 A to 1.5 A, 2µs $V_{OUT}$ = 5 V FPWM $f_{SW}$ = 2100 kHz

**Figure 30. Load Transient**

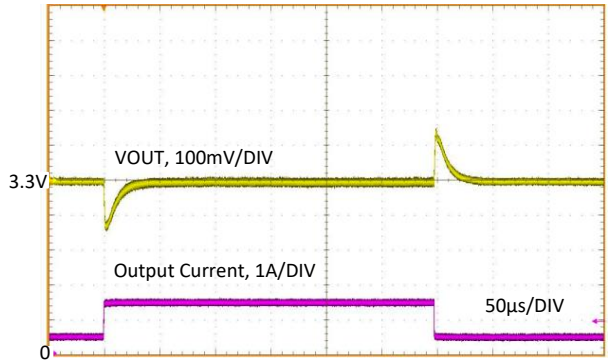


LM63610 0.5 A to 1.5 A, 2µs $V_{OUT}$ = 3.3 V AUTO $f_{SW}$ = 2100 kHz

**Figure 31. Load Transient**


Copyright © 2020, Texas Instruments Incorporated

Unless otherwise specified, the following conditions apply: $V_{IN}$ = 13.5 V, $T_A$ = 25°C. Figure 38 shows the circuit with the appropriate BOM from Table 6.

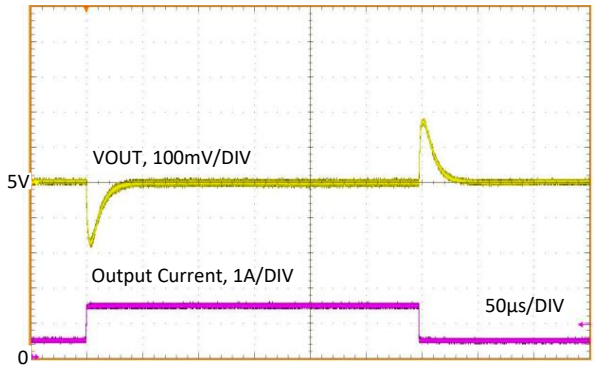


LM63610 $V_{OUT}$ = 5 V $f_{SW}$ = 2100 kHz
0.5 A to 1.5 A, 2µs AUTO

**Figure 32. Load Transient**

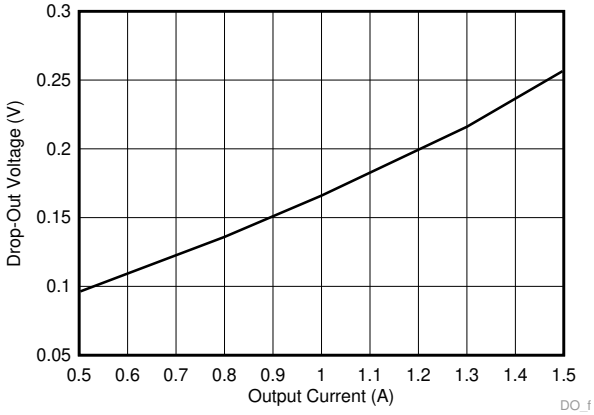


LM63610 $f_{SW}$ = 140 kHz (AUTO)

**Figure 33. Dropout Voltage versus Output Current for -1% Drop**

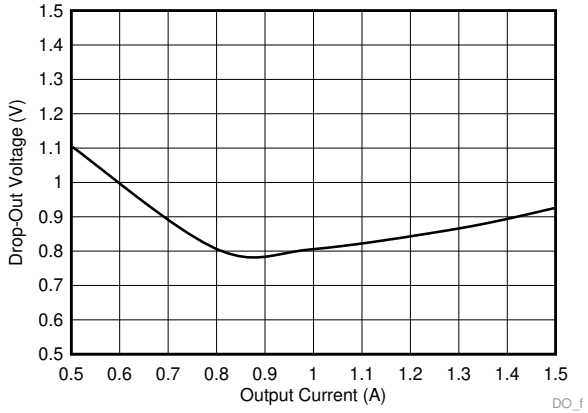


LM63610 $f_{SW}$ = 1850 kHz (AUTO)

**Figure 34. Dropout Voltage versus Output Current to 1.85 MHz**

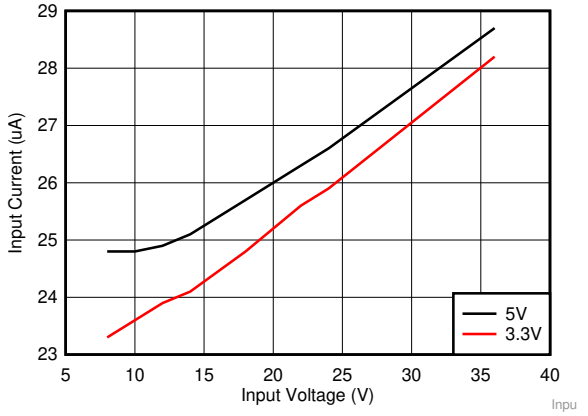


LM63610 $I_{OUT}$ = 0 A $f_{SW}$ = 2100 kHz (AUTO)

**Figure 35. Input Supply Current versus Input Voltage**

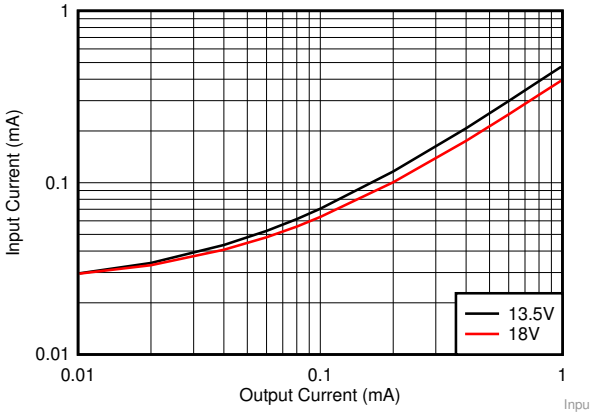


LM63610 $V_{OUT}$ = 5 V $f_{SW}$ = 2100 kHz (AUTO)

**Figure 36. Input Supply Current versus Output Current**

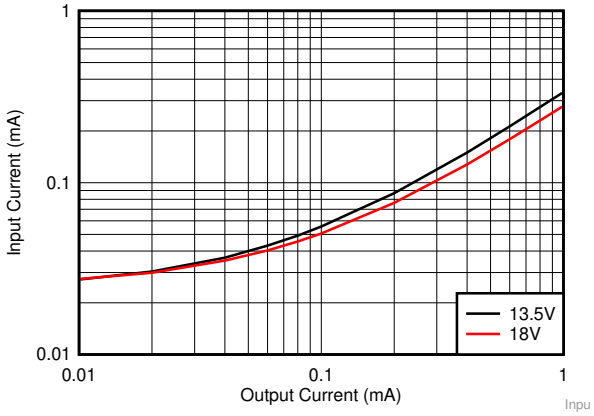


LM63610 $V_{OUT}$ = 3.3 V $f_{SW}$ = 2100 kHz (AUTO)

**Figure 37. Input Supply Current versus Output Current**

Copyright © 2020, Texas Instruments Incorporated

Unless otherwise specified, the following conditions apply: $V_{IN}$ = 13.5 V, $T_A$ = 25°C. Figure 38 shows the circuit with the appropriate BOM from Table 6.

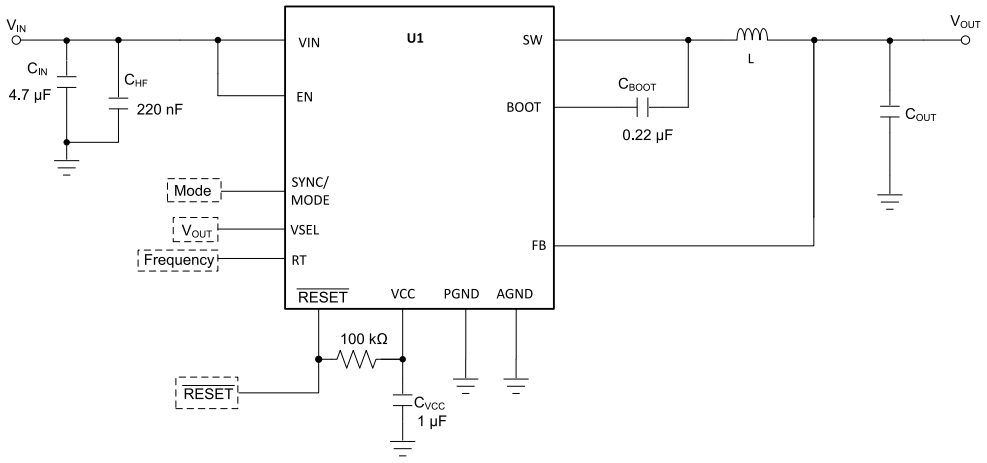


**Figure 38. Circuit for Typical Application Curves**

**Table 6. BOM for Typical Application Curves(1)**

| $V_{OUT}$ | FREQUENCY | OUTPUT CURRENT | $C_{OUT}$ | L | U1 |
|---|---|---|---|---|---|
| 3.3 V | 400 kHz | 1.5 A | 2 × 22 µF | 10 µH, 40 mΩ | LM63610 |
| 3.3 V | 2100 kHz | 1.5 A | 1 × 10 µF | 4.7 µH, 30 mΩ | LM63610 |
| 5 V | 400 kHz | 1.5 A | 2 × 22 µF | 10 µH, 40 mΩ | LM63610 |
| 5 V | 2100 kHz | 1.5 A | 1 × 10 µF | 4.7 µH, 30 mΩ | LM63610 |

(1) The values in this table were selected to enhance certain performance criteria and may not represent typical values.


Copyright © 2020, Texas Instruments Incorporated

### 9.2.4 EMI Performance Curves

EMI results critically depend on PCB layout and test setup. The results given here are typical and given for information purposes only. Figure 41 shows the used EMI filter. The limit lines shown refer to CISPR25 class 5.

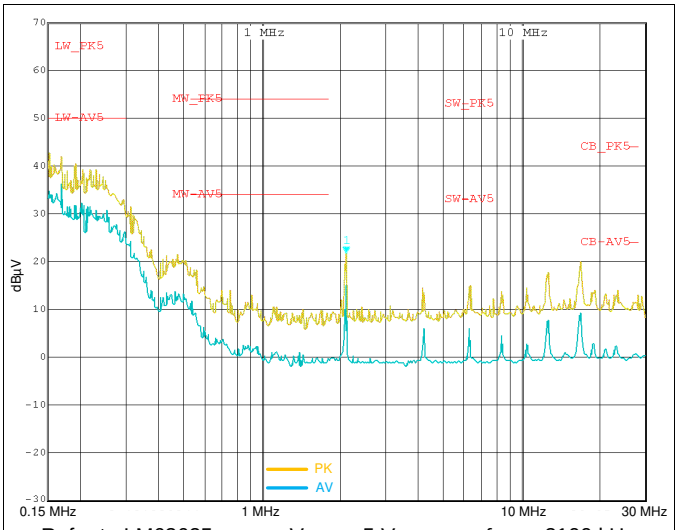


Refer to LM63625
$I_{OUT}$ = 2.5 A

$V_{OUT}$ = 5 V
Dither

$f_{SW}$ = 2100 kHz

**Figure 39. Typical Conducted EMI with LM63625 0.15 MHz to 30 MHz**

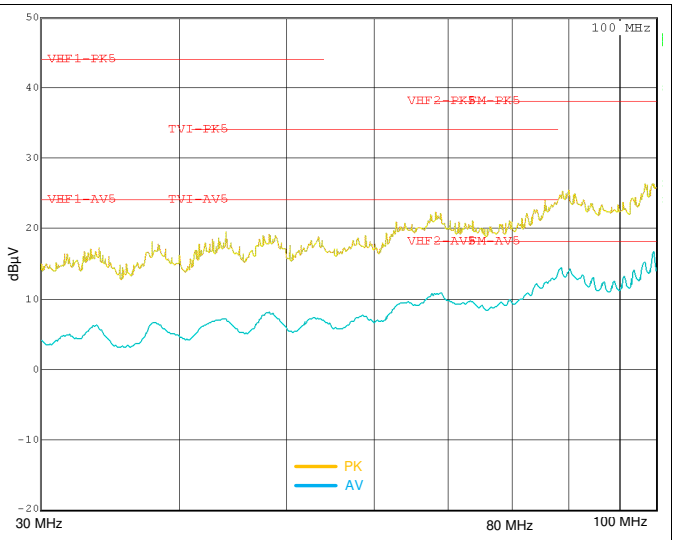


Refer to LM63625
$I_{OUT}$ = 2.5 A

$V_{OUT}$ = 5 V
Dither

$f_{SW}$ = 2100 kHz

**Figure 40. Typical Conducted EMI with LM63625 30 MHz to 108 MHz**

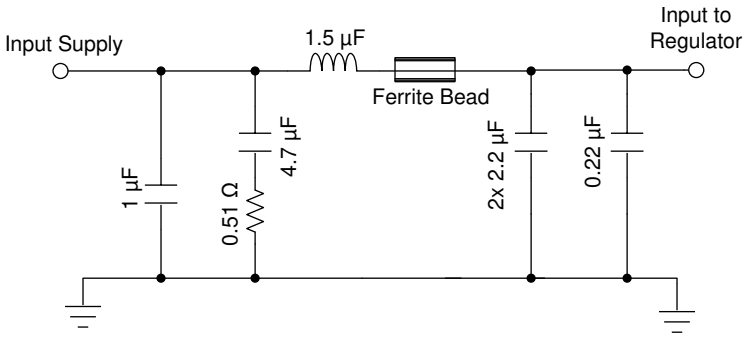


(1) Input filter used only for EMI measurements shown in the *EMI Performance Curves* section.

**Figure 41. Typical Input EMI Filter with LM63625**

## 9.3 What to Do and What Not to Do

- Do not exceed the *Absolute Maximum Ratings*.
- Do not exceed the *Recommended Operating Conditions*.
- Do not exceed the *ESD Ratings*.
- Do not allow the EN input to float.
- Do not allow the output voltage to exceed the input voltage, nor go below ground.
- Do not use the value of $R_{\theta JA}$ given in the *Thermal Information* to design your application. See the *Maximum Ambient Temperature* section.
- Follow all the guidelines and suggestions found in this data sheet before committing the design to production. TI application engineers are ready to help critique your design and PCB layout to help make your project a success.
- Use a 220-nF capacitor connected directly to the VIN and PGND pins of the device. See the *Input Capacitor Selection* section for details.

Copyright © 2020, Texas Instruments Incorporated

## 10 Power Supply Recommendations

The characteristics of the input supply must be compatible with the limits found in the *Specifications* of this data sheet. In addition, the input supply must be capable of delivering the required input current to the loaded regulator. The average input current can be estimated with Equation 13.

$$I_{IN} = \frac{V_{OUT} \cdot I_{OUT}}{V_{IN} \cdot \eta} \quad (13)$$

where

- $\eta$ is the efficiency

If the regulator is connected to the input supply through long wires or PCB traces, special care is required to achieve good performance. The parasitic inductance and resistance of the input cables can have an adverse effect on the operation of the regulator. The parasitic inductance, in combination with the low-ESR, ceramic input capacitors, can form an under damped resonant circuit, resulting in overvoltage transients at the input to the regulator. The parasitic resistance can cause the voltage at the VIN pin to dip whenever a load transient is applied to the output. If the application is operating close to the minimum input voltage, this dip can cause the regulator to momentarily shutdown and reset. The best way to solve these kind of issues is to reduce the distance from the input supply to the regulator and use an aluminum or tantalum input capacitor in parallel with the ceramics. The moderate ESR of these types of capacitors help damp the input resonant circuit and reduce any overshoots. A value in the range of 20 µF to 100 µF is usually sufficient to provide input damping and help hold the input voltage steady during large load transients.

It is recommended that the input supply must not be allowed to fall below the output voltage by more than 0.3 V. Under such conditions, the output capacitors discharges through the body diode of the high-side power MOSFET. The resulting current can cause unpredictable behavior, and in extreme cases, possible device damage. If the application allows for this possibility, then use a Schottky diode from VIN to VOUT to provide a path around the regulator for this current.

In some cases, a transient voltage suppressor (TVS) is used on the input of regulators. One class of this device has a *snap-back* characteristic (thyristor type). The use of a device with this type of characteristic is not recommended. When the TVS fires, the clamping voltage falls to a very low value. If this voltage is less than the output voltage of the regulator, the output capacitors discharges through the device, as mentioned above.

Sometimes, for other system considerations, an input filter is used in front of the regulator. This can lead to instability as well as some of the effects mentioned above, unless it is designed carefully. The *AN-2162 Simple Success with Conducted EMI from DCDC Converters User's Guide* provides helpful suggestions when designing an input filter for any switching regulator.


Copyright © 2020, Texas Instruments Incorporated

# 11 Layout

## 11.1 Layout Guidelines

The PCB layout of any DC/DC converter is critical to the optimal performance of the design. Bad PCB layout can disrupt the operation of an otherwise good schematic design. Even if the converter regulates correctly, bad PCB layout can mean the difference between a robust design and one that cannot be mass produced. Furthermore, the EMI performance of the regulator is dependent on the PCB layout to a great extent. In a buck converter, the most critical PCB feature is the loop formed by the input capacitors and power ground, as shown in Figure 42. This loop carries large transient currents that can cause large transient voltages when reacting with the trace inductance. These unwanted transient voltages disrupt the proper operation of the converter. Because of this, the traces in this loop must be wide and short, and the loop area as small as possible to reduce the parasitic inductance. Figure 43 shows a recommended layout for the critical components of the LM63610-Q1.

1. **Place the input capacitors as close as possible to the VIN and PGND terminals.** VIN and PGND pins are adjacent, simplifying the input capacitor placement. Thermal reliefs in this area are not recommended.
2. **Place a bypass capacitor for VCC close to the VCC pin.** This capacitor must be placed close to the device and routed with short, wide traces to the VCC and PGND pins. Thermal reliefs in this area are not recommended.
3. **Use wide traces for the $C_{BOOT}$ capacitor.** Place $C_{BOOT}$ close to the device with short and wide traces to the BOOT and SW pins. Thermal reliefs in this area are not recommended.
4. **Place the feedback divider as close as possible to the FB pin of the device.** If an external feedback divider is used with the ADJ option, place $R_{FBB}$, $R_{FBT}$, and $C_{FF}$ close to the device. The connections to FB and AGND must be short and close to those pins on the device. The connection to $V_{OUT}$ can be somewhat longer. However, this latter trace must not be routed near any noise source (such as the SW node) that can capacitively couple into the feedback path of the regulator.
5. **Use at least one ground plane in one of the middle layers.** This plane acts as a noise shield and also act as a heat dissipation path.
6. **Connect the thermal pad to the ground plane.** The thermal pad (DAP) connection must be soldered down to the PCB ground plane. This pad acts as a heat-sink connection and an electrical ground connection for the regulator. The integrity of this solder connection has a direct bearing on the total effective $R_{\theta JA}$ of the application. Thermal reliefs in this area are not recommended.
7. **Provide wide paths for VIN, VOUT, SW, and PGND.** Making these paths as wide and direct as possible reduces any voltage drops on the input or output paths of the converter and maximizes efficiency. Thermal reliefs in this area are not recommended.
8. **Provide enough PCB area for proper heat-sinking.** As stated in the *Maximum Ambient Temperature* section, enough copper area must be used to ensure a low $R_{\theta JA}$, commensurate with the maximum load current and ambient temperature. The top and bottom PCB layers must be made with two ounce copper and no less than one ounce. Use an array of heat-sinking vias to connect the thermal pad (DAP) to the ground plane on the bottom PCB layer. If the PCB design uses multiple copper layers (recommended), these thermal vias can also be connected to the inner layer heat-spreading ground planes.
9. **Keep switch area small.** Keep the copper area connecting the SW pin to the inductor as short and wide as possible. At the same time, the total area of this node must be minimized to help reduce radiated EMI.

See the following PCB layout resources for additional important guidelines:

- *Layout Guidelines for Switching Power Supplies Application Report*
- *Simple Switcher PCB Layout Guidelines Application Report*
- *Construction Your Power Supply- Layout Considerations Seminar*
- *Low Radiated EMI Layout Made Simple with LM4360x and LM4600x Application Report*

Copyright © 2020, Texas Instruments Incorporated

## Layout Guidelines (continued)

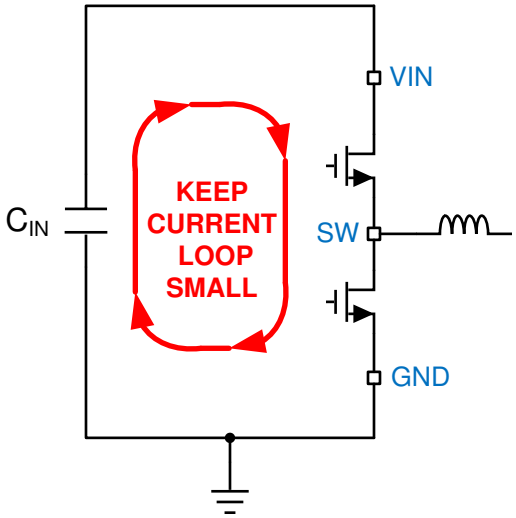


**Figure 42. Current Loops With Fast Edges**

### 11.1.1 Ground and Thermal Considerations

As mentioned above, TI recommends using one of the middle layers as a solid ground plane. A ground plane provides shielding for sensitive circuits and traces. It also provides a quiet reference potential for the control circuitry. Connect the AGND and PGND pins to the ground planes using vias next to the bypass capacitors. PGND pins are connected directly to the source of the low-side MOSFET switch and also connected directly to the grounds of the input and output capacitors. The PGND net contains noise at the switching frequency and can bounce due to load variations. The PGND trace, as well as the VIN and SW traces, must be constrained to one side of the ground planes. The other side of the ground plane contains much less noise and must be used for sensitive routes.

TI recommends providing adequate device heat sinking by using the thermal pad (DAP) of the device as the primary thermal path. Use a minimum 4 × 3 array of 10-mil thermal vias to connect the DAP to the system ground plane heat sink. The vias must be evenly distributed under the DAP. Use as much copper as possible for system ground plane, on the top and bottom layers for the best heat dissipation. Use a four-layer board with the copper thickness for the four layers, starting from the top as: 2 oz / 1 oz / 1 oz / 2 oz. A four-layer board with enough copper thickness, and proper layout, provides low current conduction impedance, proper shielding, and lower thermal resistance.


Copyright © 2020, Texas Instruments Incorporated

## 11.2 Layout Example

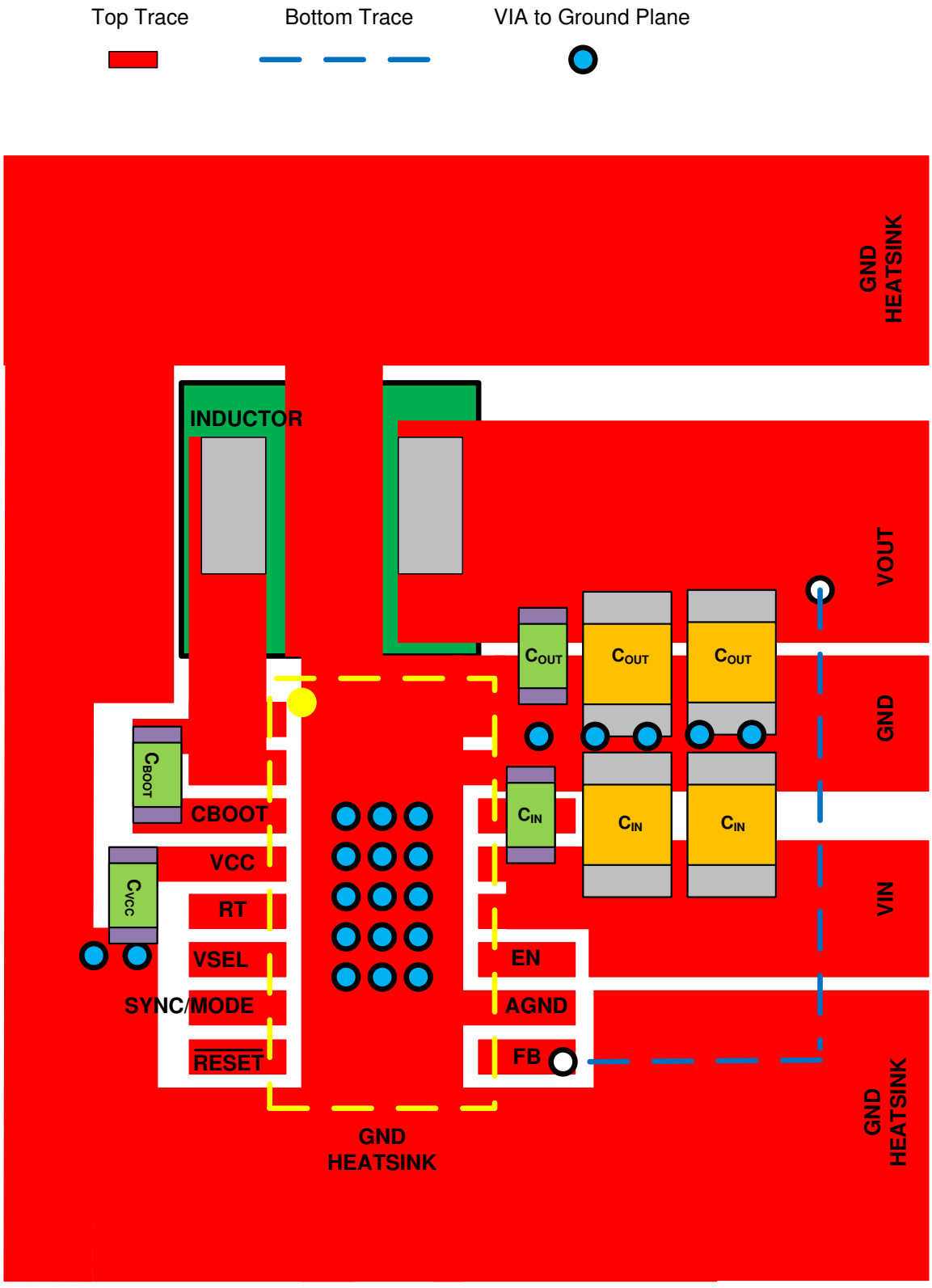


**Figure 43. Example Layout**

# 12 Device and Documentation Support

## 12.1 Documentation Support

### 12.1.1 Related Documentation

For related documentation see the following:

- Texas Instruments, *AN-2020 Thermal Design By Insight, Not Hindsight Application Report*
- Texas Instruments, *A Guide to Board Layout for Best Thermal Resistance for Exposed Pad Packages Application Report*
- Texas Instruments, *Semiconductor and IC Package Thermal Metrics Application Report*
- Texas Instruments, *Thermal Design Made Simple with LM43603 and LM43602 Application Report*
- Texas Instruments, *Using New Thermal Metrics Application Report*
- Texas Instruments, *Layout Guidelines for Switching Power Supplies Application Report*
- Texas Instruments, *Simple Switcher PCB Layout Guidelines Application Report*
- Texas Instruments, *Constructing Your Power Supply-layout Considerations Seminar*
- Texas Instruments, *Low Radiated EMI Layout Made Simple with LM4360x and LM4600x Application Report*

## 12.2 Receiving Notification of Documentation Updates

To receive notification of documentation updates, navigate to the device product folder on ti.com. In the upper right corner, click on *Alert me* to register and receive a weekly digest of any product information that has changed. For change details, review the revision history included in any revised document.

## 12.3 Support Resources

TI E2E™ support forums are an engineer's go-to source for fast, verified answers and design help — straight from the experts. Search existing answers or ask your own question to get the quick design help you need.

Linked content is provided "AS IS" by the respective contributors. They do not constitute TI specifications and do not necessarily reflect TI's views; see TI's Terms of Use.

## 12.4 Trademarks

PowerPAD, E2E are trademarks of Texas Instruments.
All other trademarks are the property of their respective owners.

## 12.5 Electrostatic Discharge Caution



These devices have limited built-in ESD protection. The leads should be shorted together or the device placed in conductive foam during storage or handling to prevent electrostatic damage to the MOS gates.

## 12.6 Glossary

SLYZ022 — *TI Glossary*.

This glossary lists and explains terms, acronyms, and definitions.

# 13 Mechanical, Packaging, and Orderable Information

The following pages include mechanical, packaging, and orderable information. This information is the most current data available for the designated devices. This data is subject to change without notice and revision of this document. For browser-based versions of this data sheet, refer to the left-hand navigation.


Copyright © 2020, Texas Instruments Incorporated

## PACKAGING INFORMATION

| Orderable Device | Status (1) | Package Type | Package Drawing | Pins | Package Qty | Eco Plan (2) | Lead finish/ Ball material (6) | MSL Peak Temp (3) | Op Temp (°C) | Device Marking (4/5) | Samples |
|---|---|---|---|---|---|---|---|---|---|---|---|
| LM63610DQPWPRQ1 | PREVIEW | HTSSOP | PWP | 16 | 2000 | Green (RoHS & no Sb/Br) | NIPDAU | Level-3-260C-168 HR | -50 to 125 | 63610DQ | |

(1) The marketing status values are defined as follows:
**ACTIVE:** Product device recommended for new designs.
**LIFEBUY:** TI has announced that the device will be discontinued, and a lifetime-buy period is in effect.
**NRND:** Not recommended for new designs. Device is in production to support existing customers, but TI does not recommend using this part in a new design.
**PREVIEW:** Device has been announced but is not in production. Samples may or may not be available.
**OBSOLETE:** TI has discontinued the production of the device.

(2) **RoHS:** TI defines "RoHS" to mean semiconductor products that are compliant with the current EU RoHS requirements for all 10 RoHS substances, including the requirement that RoHS substance do not exceed 0.1% by weight in homogeneous materials. Where designed to be soldered at high temperatures, "RoHS" products are suitable for use in specified lead-free processes. TI may reference these types of products as "Pb-Free".
**RoHS Exempt:** TI defines "RoHS Exempt" to mean products that contain lead but are compliant with EU RoHS pursuant to a specific EU RoHS exemption.
**Green:** TI defines "Green" to mean the content of Chlorine (Cl) and Bromine (Br) based flame retardants meet JS709B low halogen requirements of <=1000ppm threshold. Antimony trioxide based flame retardants must also meet the <=1000ppm threshold requirement.

(3) MSL, Peak Temp. - The Moisture Sensitivity Level rating according to the JEDEC industry standard classifications, and peak solder temperature.

(4) There may be additional marking, which relates to the logo, the lot trace code information, or the environmental category on the device.

(5) Multiple Device Markings will be inside parentheses. Only one Device Marking contained in parentheses and separated by a "~" will appear on a device. If a line is indented then it is a continuation of the previous line and the two combined represent the entire Device Marking for that device.

(6) Lead finish/Ball material - Orderable Devices may have multiple material finish options. Finish options are separated by a vertical ruled line. Lead finish/Ball material values may wrap to two lines if the finish value exceeds the maximum column width.

**Important Information and Disclaimer:**The information provided on this page represents TI's knowledge and belief as of the date that it is provided. TI bases its knowledge and belief on information provided by third parties, and makes no representation or warranty as to the accuracy of such information. Efforts are underway to better integrate information from third parties. TI has taken and continues to take reasonable steps to provide representative and accurate information but may not have conducted destructive testing or chemical analysis on incoming materials and chemicals. TI and TI suppliers consider certain information to be proprietary, and thus CAS numbers and other limited information may not be available for release.

In no event shall TI's liability arising out of such information exceed the total purchase price of the TI part(s) at issue in this document sold by TI to Customer on an annual basis.

## IMPORTANT NOTICE AND DISCLAIMER

TI PROVIDES TECHNICAL AND RELIABILITY DATA (INCLUDING DATASHEETS), DESIGN RESOURCES (INCLUDING REFERENCE DESIGNS), APPLICATION OR OTHER DESIGN ADVICE, WEB TOOLS, SAFETY INFORMATION, AND OTHER RESOURCES “AS IS” AND WITH ALL FAULTS, AND DISCLAIMS ALL WARRANTIES, EXPRESS AND IMPLIED, INCLUDING WITHOUT LIMITATION ANY IMPLIED WARRANTIES OF MERCHANTABILITY, FITNESS FOR A PARTICULAR PURPOSE OR NON-INFRINGEMENT OF THIRD PARTY INTELLECTUAL PROPERTY RIGHTS.

These resources are intended for skilled developers designing with TI products. You are solely responsible for (1) selecting the appropriate TI products for your application, (2) designing, validating and testing your application, and (3) ensuring your application meets applicable standards, and any other safety, security, or other requirements. These resources are subject to change without notice. TI grants you permission to use these resources only for development of an application that uses the TI products described in the resource. Other reproduction and display of these resources is prohibited. No license is granted to any other TI intellectual property right or to any third party intellectual property right. TI disclaims responsibility for, and you will fully indemnify TI and its representatives against, any claims, damages, costs, losses, and liabilities arising out of your use of these resources.

TI’s products are provided subject to TI’s Terms of Sale (www.ti.com/legal/termsofsale.html) or other applicable terms available either on ti.com or provided in conjunction with such TI products. TI’s provision of these resources does not expand or otherwise alter TI’s applicable warranties or warranty disclaimers for TI products.

Mailing Address: Texas Instruments, Post Office Box 655303, Dallas, Texas 75265
Copyright © 2020, Texas Instruments Incorporated