LM61440 3-V to 36-V, 4-A, Low-Noise Synchronous Step-Down Converter

1 Features

- High efficiency power conversion at all loads
  - Synchronous Rectification
  - 8-µA standby current with V_{IN}=13.5 V, V_{OUT}=3.3 V, no load
  - Frequency foldback in light load for improved efficiency with Auto Mode
  - Low MOSFET ON-Resistance
    $R_{DS_ON_HS}$ = 41 mΩ (typical)
    $R_{DS_ON_LS}$ = 21 mΩ (typical)
  - Optional external bias input
- Low EMI
  - Adjustable SW node rise time
  - Frequency adjust or synchronize over 200 kHz – 2.2 MHz range
  - FPWM when synchronized for constant frequency at light loads
  - 4 mm × 3.5 mm low-EMI VQFN-HR package (with wettable flanks) and pinout
- Wide Conversion Range
  - Input voltage: 3 V to 36 V
  - Output voltage adjustable from 1 V to 95% of V_{IN}
  - DC load current: 0 A to 4 A
  - t_{ON_MIN} = 50 ns (typical)
  - t_{OFF_MIN} = 70 ns (typical)
- PGood output with filter and delayed release
- Built-in compensation, soft start, current limits, hiccup protection, thermal shutdown, and UVLO

2 Applications

- AC Inverter and Servo Drive Control Module
- Ultrasound Imaging Scanner/Probe
- Test & Measurement Instrumentation
- General purpose wide-V_{IN} step down applications

3 Description

The LM61440 is a general-purpose synchronous step-down buck converter providing adjustable output voltage and 0 to 4 A DC load current from a supply voltage ranging from 3.0 V to 36 V. The LM61440 is designed to achieve high efficiency and high performance. Auto-mode enables frequency foldback when operating with light loads, allowing an unloaded current consumption of only 8 µA (typical) and high efficiency with light loads. Together with very low MOSFET ON resistances and optional external bias input, exceptional efficiency is achieved over entire load range. It also targets minimal EMI by adjustable SW node rise time and VQFN-HR package featuring low ringing and optimal-layout-friendly pinout. Switching frequency can be set or synchronized between 200 kHz and 2.2 MHz to avoid noise sensitive frequency bands, and for improved efficiency at low operating frequency or smaller solution size at high frequency. The device also provides an open-drain PGood output and comprehensive protection features. Electrical characteristics are specified over a junction temperature range of –40°C to +150°C.

Device Information(1)

PART NUMBER	PACKAGE	BODY SIZE (NOM)
LM61440	VQFN-HR (14)	4.00 mm × 3.50 mm

(1) For all available packages, see the orderable addendum at the end of the data sheet.

ADVANCE INFORMATION

Simplified Schematic

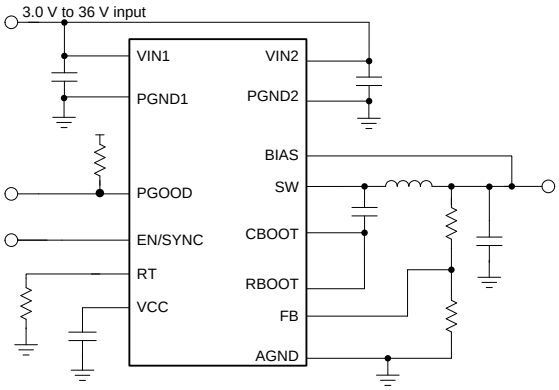

Efficiency V_{IN}=13.5 V F_{SW}=400 kHz

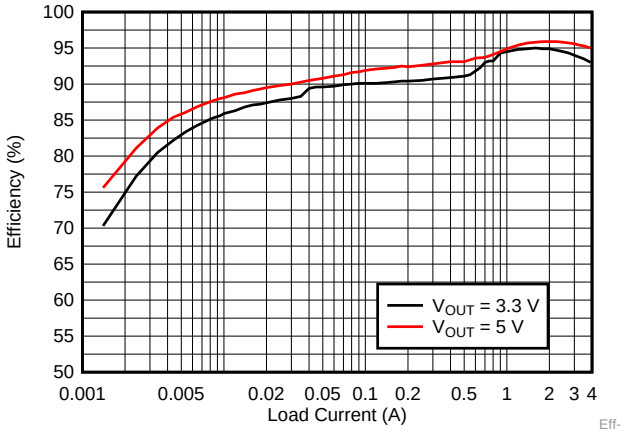

An IMPORTANT NOTICE at the end of this data sheet addresses availability, warranty, changes, use in safety-critical applications, intellectual property matters and other important disclaimers. ADVANCE INFORMATION for pre-production products; subject to change without notice.

Table of Contents

1 **Features** 1
2 **Applications** 1
3 **Description** 1
4 **Revision History** 2
5 **Device and Documentation Support** 3
5.1 Receiving Notification of Documentation Updates 3
5.2 Community Resources 3
5.3 Trademarks 3
5.4 Electrostatic Discharge Caution 3
5.5 Glossary 3
6 **Mechanical, Packaging, and Orderable Information** 3

4 Revision History

NOTE: Page numbers for previous revisions may differ from page numbers in the current version.

DATE	REVISION	NOTES
May 2019	*	Initial release

ADVANCE INFORMATION

Copyright © 2019, Texas Instruments Incorporated

5 Device and Documentation Support

5.1 Receiving Notification of Documentation Updates

To receive notification of documentation updates, navigate to the device product folder on ti.com. In the upper right corner, click on *Alert me* to register and receive a weekly digest of any product information that has changed. For change details, review the revision history included in any revised document.

5.2 Community Resources

The following links connect to TI community resources. Linked contents are provided "AS IS" by the respective contributors. They do not constitute TI specifications and do not necessarily reflect TI's views; see TI's Terms of Use.

TI E2E™ Online Community ***TI's Engineer-to-Engineer (E2E) Community.*** Created to foster collaboration among engineers. At e2e.ti.com, you can ask questions, share knowledge, explore ideas and help solve problems with fellow engineers.

Design Support ***TI's Design Support*** Quickly find helpful E2E forums along with design support tools and contact information for technical support.

5.3 Trademarks

E2E is a trademark of Texas Instruments.
All other trademarks are the property of their respective owners.

5.4 Electrostatic Discharge Caution



This integrated circuit can be damaged by ESD. Texas Instruments recommends that all integrated circuits be handled with appropriate precautions. Failure to observe proper handling and installation procedures can cause damage.

ESD damage can range from subtle performance degradation to complete device failure. Precision integrated circuits may be more susceptible to damage because very small parametric changes could cause the device not to meet its published specifications.

5.5 Glossary

SLYZ022 — *TI Glossary*.

This glossary lists and explains terms, acronyms, and definitions.

6 Mechanical, Packaging, and Orderable Information

The following pages include mechanical, packaging, and orderable information. This information is the most current data available for the designated devices. This data is subject to change without notice and revision of this document. For browser-based versions of this data sheet, refer to the left-hand navigation.

ADVANCE INFORMATION

Copyright © 2019, Texas Instruments Incorporated

PACKAGING INFORMATION

Orderable Device	Status (1)	Package Type	Package Drawing	Pins	Package Qty	Eco Plan (2)	Lead/Ball Finish (6)	MSL Peak Temp (3)	Op Temp (°C)	Device Marking (4/5)	Samples
PLM61440AANRJRT	PREVIEW	VQFN-HR	RJR	14	250	TBD	Call TI	Call TI	-40 to 150		

(1) The marketing status values are defined as follows:
ACTIVE: Product device recommended for new designs.
LIFEBUY: TI has announced that the device will be discontinued, and a lifetime-buy period is in effect.
NRND: Not recommended for new designs. Device is in production to support existing customers, but TI does not recommend using this part in a new design.
PREVIEW: Device has been announced but is not in production. Samples may or may not be available.
OBSOLETE: TI has discontinued the production of the device.

(2) **RoHS:** TI defines "RoHS" to mean semiconductor products that are compliant with the current EU RoHS requirements for all 10 RoHS substances, including the requirement that RoHS substance do not exceed 0.1% by weight in homogeneous materials. Where designed to be soldered at high temperatures, "RoHS" products are suitable for use in specified lead-free processes. TI may reference these types of products as "Pb-Free".
RoHS Exempt: TI defines "RoHS Exempt" to mean products that contain lead but are compliant with EU RoHS pursuant to a specific EU RoHS exemption.
Green: TI defines "Green" to mean the content of Chlorine (Cl) and Bromine (Br) based flame retardants meet JS709B low halogen requirements of <=1000ppm threshold. Antimony trioxide based flame retardants must also meet the <=1000ppm threshold requirement.

(3) MSL, Peak Temp. - The Moisture Sensitivity Level rating according to the JEDEC industry standard classifications, and peak solder temperature.

(4) There may be additional marking, which relates to the logo, the lot trace code information, or the environmental category on the device.

(5) Multiple Device Markings will be inside parentheses. Only one Device Marking contained in parentheses and separated by a "~" will appear on a device. If a line is indented then it is a continuation of the previous line and the two combined represent the entire Device Marking for that device.

(6) Lead/Ball Finish - Orderable Devices may have multiple material finish options. Finish options are separated by a vertical ruled line. Lead/Ball Finish values may wrap to two lines if the finish value exceeds the maximum column width.

Important Information and Disclaimer: The information provided on this page represents TI's knowledge and belief as of the date that it is provided. TI bases its knowledge and belief on information provided by third parties, and makes no representation or warranty as to the accuracy of such information. Efforts are underway to better integrate information from third parties. TI has taken and continues to take reasonable steps to provide representative and accurate information but may not have conducted destructive testing or chemical analysis on incoming materials and chemicals. TI and TI suppliers consider certain information to be proprietary, and thus CAS numbers and other limited information may not be available for release.

In no event shall TI's liability arising out of such information exceed the total purchase price of the TI part(s) at issue in this document sold by TI to Customer on an annual basis.

OTHER QUALIFIED VERSIONS OF LM61440 :

- Automotive: LM61440-Q1

NOTE: Qualified Version Definitions:

- Automotive - Q100 devices qualified for high-reliability automotive applications targeting zero defects

IMPORTANT NOTICE AND DISCLAIMER

TI PROVIDES TECHNICAL AND RELIABILITY DATA (INCLUDING DATASHEETS), DESIGN RESOURCES (INCLUDING REFERENCE DESIGNS), APPLICATION OR OTHER DESIGN ADVICE, WEB TOOLS, SAFETY INFORMATION, AND OTHER RESOURCES “AS IS” AND WITH ALL FAULTS, AND DISCLAIMS ALL WARRANTIES, EXPRESS AND IMPLIED, INCLUDING WITHOUT LIMITATION ANY IMPLIED WARRANTIES OF MERCHANTABILITY, FITNESS FOR A PARTICULAR PURPOSE OR NON-INFRINGEMENT OF THIRD PARTY INTELLECTUAL PROPERTY RIGHTS.

These resources are intended for skilled developers designing with TI products. You are solely responsible for (1) selecting the appropriate TI products for your application, (2) designing, validating and testing your application, and (3) ensuring your application meets applicable standards, and any other safety, security, or other requirements. These resources are subject to change without notice. TI grants you permission to use these resources only for development of an application that uses the TI products described in the resource. Other reproduction and display of these resources is prohibited. No license is granted to any other TI intellectual property right or to any third party intellectual property right. TI disclaims responsibility for, and you will fully indemnify TI and its representatives against, any claims, damages, costs, losses, and liabilities arising out of your use of these resources.

TI’s products are provided subject to TI’s Terms of Sale (www.ti.com/legal/termsofsale.html) or other applicable terms available either on ti.com or provided in conjunction with such TI products. TI’s provision of these resources does not expand or otherwise alter TI’s applicable warranties or warranty disclaimers for TI products.

Mailing Address: Texas Instruments, Post Office Box 655303, Dallas, Texas 75265
Copyright © 2019, Texas Instruments Incorporated