# LM614 Quad Operational Amplifier and Adjustable Reference

**Check for Samples: LM614**

## FEATURES

**Op Amp**

- **Low Operating Current: 450µA**
- **Wide Supply Voltage Range: 4V to 36V**
- **Wide Common-Mode Range: $V^-$ to ($V^+$ − 1.8V)**
- **Wide Differential Input Voltage: ±36V**

**Reference**

- **Adjustable Output Voltage: 1.2V to 5.0V**
- **Initial Tolerance: ±2.0%**
- **Wide Operating Current Range: 17µA to 20mA**
- **Tolerant of Load Capacitance**

## APPLICATIONS

- **Transducer Bridge Driver and Signal Processing**
- **Process and Mass Flow Control Systems**
- **Power Supply Voltage Monitor**
- **Buffered Voltage References for A/D's**

## DESCRIPTION

The LM614 consists of four op-amps and a programmable voltage reference in a 16-pin package. The op-amp out-performs most single-supply op-amps by providing higher speed and bandwidth along with low supply current. This device was specifically designed to lower cost and board space requirements in transducer, test, measurement and data acquisition systems.

Combining a stable voltage reference with four wide output swing op-amps makes the LM614 ideal for single supply transducers, signal conditioning and bridge driving where large common-mode-signals are common. The voltage reference consists of a reliable band-gap design that maintains low dynamic output impedance (1Ω typical), initial tolerance (2.0%), and the ability to be programmed from 1.2V to 5.0V via two external resistors. The voltage reference is very stable even when driving large capacitive loads, as are commonly encountered in CMOS data acquisition systems.

As a member of TI's new Super-Block™ family, the LM614 is a space-saving monolithic alternative to a multichip solution, offering a high level of integration without sacrificing performance.

### Connection Diagram

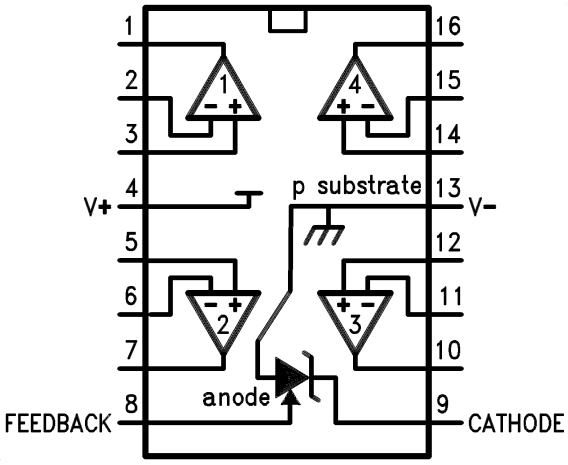


Please be aware that an important notice concerning availability, standard warranty, and use in critical applications of Texas Instruments semiconductor products and disclaimers thereto appears at the end of this data sheet.

Super-Block is a trademark of dcl_owner.
All other trademarks are the property of their respective owners.

PRODUCTION DATA information is current as of publication date. Products conform to specifications per the terms of the Texas Instruments standard warranty. Production processing does not necessarily include testing of all parameters.

Copyright © 1998–2013, Texas Instruments Incorporated

These devices have limited built-in ESD protection. The leads should be shorted together or the device placed in conductive foam during storage or handling to prevent electrostatic damage to the MOS gates.

## Absolute Maximum Ratings(1)(2)

| | | |
|---|---|---|
| Voltage on Any Pins except $V_R$ (referred to $V^-$ pin) | | 36V (Max)(3)<br>−0.3V (Min)(4) |
| Current through Any Input Pin & $V_R$ Pin | | ±20 |
| Differential Input Voltage | LM614I | ±36V |
| | LM614C | ±32V |
| Storage Temperature Range | | $-65°C \le T_J \le +150°C$ |
| Maximum Junction Temperature | | 150°C |
| Thermal Resistance, Junction-to-Ambient(5) | | 150°C |
| Soldering Information (Soldering, 10 sec.) | | 220°C |
| ESD Tolerance(6) | | ±1kV |

(1) Absolute maximum ratings indicate limits beyond which damage to the component may occur. Electrical specifications do not apply when operating the device beyond its rated operating conditions.
(2) If Military/Aerospace specified devices are required, please contact the Texas Instruments Sales Office/ Distributors for availability and specifications.
(3) Input voltage above V+ is allowed.
(4) More accurately, it is excessive current flow, with resulting excess heating, that limits the voltages on all pins. When any pin is pulled a diode drop below V−, a parasitic NPN transistor turns ON. No latch-up will occur as long as the current through that pin remains below the Maximum Rating. Operation is undefined and unpredictable when any parasitic diode or transistor is conducting.
(5) Junction temperature may be calculated using TJ = TA + P DθjA. The given thermal resistance is worst-case for packages in sockets in still air. For packages soldered to copper-clad board with dissipation from one comparator or reference output transistor, nominal θjA is 90°C/W for the DW package.
(6) Human body model, 100 pF discharged through a 1.5 kΩ resistor.

## Operating Temperature Range

| | |
|---|---|
| LM614I | $-40°C \le T_J \le +85°C$ |
| LM614C | $0°C \le T_J \le +70°C$ |

## Electrical Characteristics

These specifications apply for $V^-$ = GND = 0V, $V^+$ = 5V, $V_{CM} = V_{OUT}$ = 2.5V, $I_R$ = 100µA, FEEDBACK pin shorted to GND, unless otherwise specified. Limits in standard typeface are for $T_J$ = 25°C; limits in **Boldface type** apply over the **Operating Temperature Range**.

| Symbol | Parameter | Conditions | Typ(1) | LM614I LM614C Limits(2) | Units |
|---|---|---|---|---|---|
| $I_S$ | Total Supply Current | $R_{LOAD} = \infty$,<br>$4V \le V^+ \le 36V$ (32V for LM614C) | 450<br>**550** | 1000<br>**1070** | µA max<br>µA max |
| $V_S$ | Supply Voltage Range | | 2.2<br>**2.9** | 2.8<br>**3** | V min<br>V min |
| | | | 46<br>**43** | 32<br>**32** | V max<br>V max |
| **OPERATIONAL AMPLIFIER** | | | | | |
| $V_{OS1}$ | $V_{OS}$ Over Supply | $4V \le V^+ \le 36V$<br>($4V \le V^+ \le 32V$ for LM614C) | 1.5<br>**2.0** | 5.0<br>**7.0** | mV max<br>mV max |
| $V_{OS2}$ | $V_{OS}$ Over $V_{CM}$ | $V_{CM}$ = 0V through $V_{CM}$ =<br>($V^+ - 1.8V$), $V^+$ = 30V | 1.0<br>**1.5** | 5.0<br>**7.0** | mV max<br>mV max |
| $\frac{V_{OS3}}{\Delta T}$ | Average $V_{OS}$ Drift | See (2) | **15** | | µV/°C max |
| $I_B$ | Input Bias Current | | 10<br>**11** | 35<br>**40** | nA max<br>nA max |
| $I_{OS}$ | Input Offset Current | | 0.2<br>**0.3** | 4<br>**5** | nA max<br>nA max |

(1) Typical values in standard typeface are for TJ = 25°C; values in boldface type apply for the full operating temperature range. These values represent the most likely parametric norm.
(2) All limits are ensured at room temperature (standard type face) or at operating temperature extremes **(bold type face)**.


Copyright © 1998–2013, Texas Instruments Incorporated

## Electrical Characteristics (continued)

These specifications apply for $V^-$ = GND = 0V, $V^+$ = 5V, $V_{CM}$ = $V_{OUT}$ = 2.5V, $I_R$ = 100µA, FEEDBACK pin shorted to GND, unless otherwise specified. Limits in standard typeface are for $T_J$ = 25°C; limits in **Boldface type** apply over the **Operating Temperature Range**.

| Symbol | Parameter | Conditions | Typ[1] | LM614I LM614C Limits[2] | Units |
|---|---|---|---|---|---|
| $\frac{I_{OS1}}{\Delta T}$ | Average Offset Drift Current | | **4** | | pA/°C |
| $R_{IN}$ | Input Resistance | Differential | 1800 | | MΩ |
| | | Common-Mode | 3800 | | MΩ |
| $C_{IN}$ | Input Capacitance | Common-Mode Input | 5.7 | | pF |
| $e_n$ | Voltage Noise | f = 100 Hz, Input Referred | 74 | | nV/√Hz |
| $I_n$ | Current Noise | f = 100 Hz, Input Referred | 58 | | fA/√Hz |
| CMRR | Common-Mode | $V^+$ = 30V, 0V ≤ $V_{CM}$ ≤ ($V^+$ − 1.8V), | 95 | 75 | dB min |
| | Rejection Ratio | CMRR = 20 log ($\Delta V_{CM}/\Delta V_{OS}$) | **90** | **70** | dB min |
| PSRR | Power Supply | 4V ≤ $V^+$ ≤ 30V, $V_{CM}$ = $V^+$/2, | 110 | 75 | dB min |
| | Rejection Ratio | PSRR = 20 log ($\Delta V^+/\Delta V_{OS}$) | **100** | **70** | dB min |
| $A_V$ | Open Loop Voltage Gain | $R_L$ = 10 kΩ to GND, $V^+$ = 30V, 5V ≤ $V_{OUT}$ ≤ 25V | 500<br>**50** | 94<br>**40** | V/mV min |
| SR | Slew Rate | $V^+$ = 30V[3] | ±0.70<br>**±0.65** | ±0.50<br>**±0.45** | V/µs |
| GBW | Gain Bandwidth | $C_L$ = 50 pF | 0.8<br>**0.52** | | MHz MHz |
| $V_{O1}$ | Output Voltage Swing High | $R_L$ = 10 kΩ to GND<br>$V^+$ = 36V (32V for LM614C) | $V^+$ − 1.4<br>**$V^+$ − 1.6** | $V^+$ − 1.8<br>**$V^+$ − 1.9** | V min<br>V min |
| $V_{O2}$ | Output Voltage Swing Low | $R_L$ = 10 kΩ to $V^+$<br>$V^+$ = 36V (32V for LM614C) | $V^-$ + 0.8<br>**$V^-$ + 0.9** | $V^-$ + 0.95<br>**$V^-$ + 1.0** | V max<br>V max |
| $I_{OUT}$ | Output Source | $V_{OUT}$ = 2.5V, $V_{+IN}$ = 0V, $V_{-IN}$ = −0.3V | 25<br>**15** | 16<br>**13** | mA min<br>mA min |
| $I_{SINK}$ | Output Sink Current | $V_{OUT}$ = 1.6V, $V_{+IN}$ = 0V, $V_{-IN}$ = 0.3V | 17<br>**9** | 13<br>**8** | mA min<br>mA min |
| $I_{SHORT}$ | Short Circuit Current | $V_{OUT}$ = 0V, $V_{+IN}$ = 3V, $V_{-IN}$ = 2V, Source | 30<br>**40** | 50<br>**60** | mA max<br>mA max |
| | | $V_{OUT}$ = 5V, $V_{+IN}$ = 2V, $V_{-IN}$ = 3V, Sink | 30<br>**32** | 70<br>**90** | mA max<br>mA max |
| **VOLTAGE REFERENCE** | | | | | |
| $V_R$ | Voltage Reference | See [4] | 1.244 | 1.2191<br>1.2689<br>(±2.0%) | V min<br>V max |
| $\frac{\Delta V_R}{\Delta T}$ | Average Temperature Drift | See [5] | **10** | **150** | PPM/°C max |
| $\frac{\Delta V_R}{\Delta T_J}$ | Hysteresis | See [6] | **3.2** | | µV/°C |
| $\frac{\Delta V_R}{\Delta I_R}$ | $V_R$ Change with Current | $V_{R(100\ \mu A)} - V_{R(17\ \mu A)}$ | 0.05<br>**0.1** | 1<br>**1.1** | mV max<br>mV max |
| | | $V_{R(10\ mA)} - V_{R(100\ \mu A)}$[7] | 1.5<br>**2.0** | 5<br>**5.5** | mV max<br>mV max |

(3) Slew rate is measured with op amp in a voltage follower configuration. For rising slew rate, the input voltage is driven from 5V to 25V, and the output voltage transition is sampled at 10V and @20V. For falling slew rate, the input voltage is driven from 25V to 5V, and the output voltage transition is sampled at 20V and 10V.

(4) $V_R$ is the Cathode-feedback voltage, nominally 1.244V.

(5) Average reference drift is calculated from the measurement of the reference voltage at 25°C and at the temperature extremes. The drift, in ppm/°C, is $10^6 \cdot \Delta V_R/(V_{R[25°C]} \cdot \Delta T_J)$, where $\Delta V_R$ is the lowest value subtracted from the highest, $V_{R[25°C]}$ is the value at 25°C, and $\Delta T_J$ is the temperature range. This parameter is ensured by design and sample testing.

(6) Hysteresis is the change in $V_R$ caused by a change in $T_J$, after the reference has been “dehysterized”. To dehysterize the reference; that is minimize the hysteresis to the typical value, cycle its junction temperature in the following pattern, spiraling in toward 25°C: 25°C, 85°C, −40°C, 70°C, 0°C, 25°C.

(7) Low contact resistance is required for accurate measurement.

Copyright © 1998–2013, Texas Instruments Incorporated

## Electrical Characteristics (continued)

These specifications apply for $V^-$ = GND = 0V, $V^+$ = 5V, $V_{CM} = V_{OUT}$ = 2.5V, $I_R$ = 100µA, FEEDBACK pin shorted to GND, unless otherwise specified. Limits in standard typeface are for $T_J$ = 25°C; limits in **Boldface type** apply over the **Operating Temperature Range**.

| Symbol | Parameter | Conditions | Typ[1] | LM614I LM614C Limits[2] | Units |
|---|---|---|---|---|---|
| R | Resistance | $\Delta V_{R(10 \rightarrow 0.1\ mA)}$/9.9 mA | **0.2** | **0.56** | Ω max |
| | | $\Delta V_{R(100 \rightarrow 17\ \mu A)}$/83 µA | **0.6** | **13** | Ω max |
| $\frac{\Delta V_R}{AV_{RO}}$ | $V_R$ Change with High $V_{RO}$ | $V_{R(Vro = Vr)} - V_{R(Vro = 5.0V)}$ (3.76V between Anode and FEEDBACK) | 2.5<br>**2.8** | 7<br>**10** | mV max<br>mV max |
| $\frac{\Delta V_R}{\Delta V+}$ | $V_R$ Change with $V^+$ Change | $V_{R(V+ = 5V)} - V_{R(V+ = 36V)}$ ($V^+$ = 32V for LM614C) | 0.1<br>**0.1** | 1.2<br>**1.3** | mV max<br>mV max |
| | | $V_{R(V+ = 5V)} - V_{R(V+ = 3V)}$ | 0.01<br>**0.01** | 1<br>**1.5** | mV max<br>mV max |
| $I_{FB}$ | FEEDBACK Bias Current | $V_{ANODE} \leq V_{FB} \leq 5.06V$ | 22<br>**29** | 50<br>**55** | nA max<br>nA max |
| $e_n$ | Voltage Noise | BW = 10 Hz to 10 kHz, $V_{RO} = V_R$ | 30 | | $\mu V_{RMS}$ |


Copyright © 1998–2013, Texas Instruments Incorporated

## Typical Performance Characteristics (Reference)

$T_J$ = 25°C, FEEDBACK pin shorted to $V^-$ = 0V, unless otherwise noted

**Reference Voltage vs Temperature on 5 Representative Units**

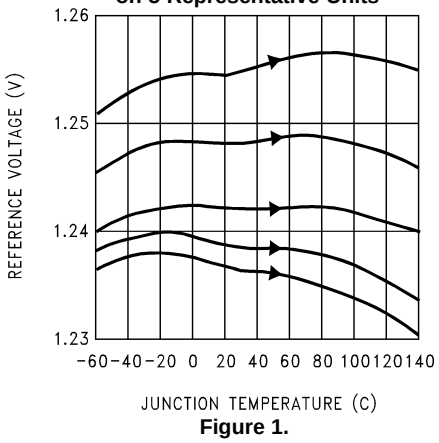


**Figure 1.**

**Reference Voltage Drift**

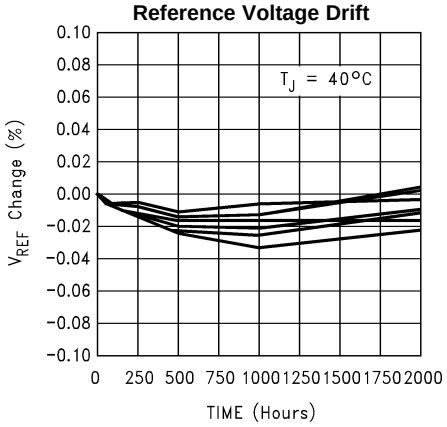


**Figure 2.**

**Accelerated Reference Voltage Drift vs. Time**

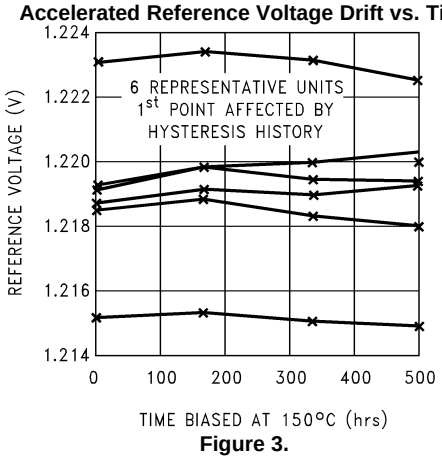


**Figure 3.**

**Reference Voltage vs. Current and Temperature**

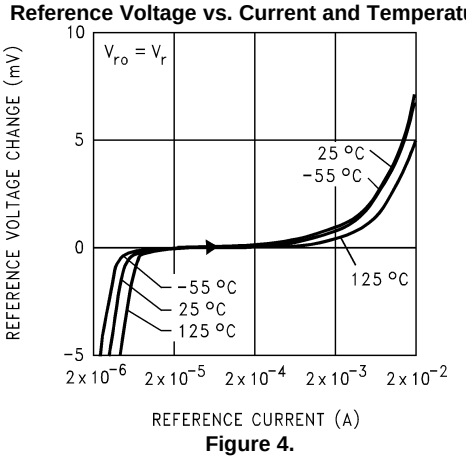


**Figure 4.**

**Reference Voltage vs. Current and Temperature**

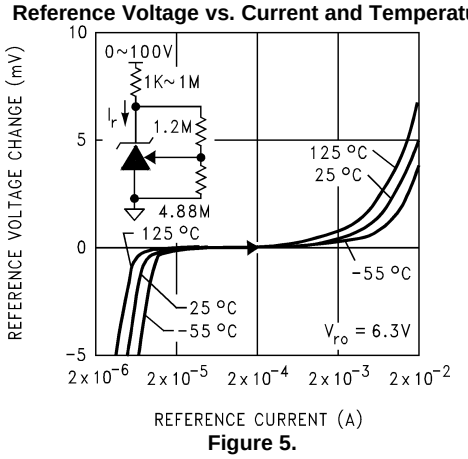


**Figure 5.**

**Reference Voltage vs. Reference Current**

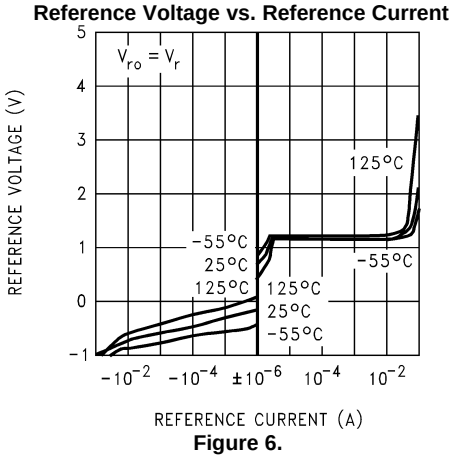


**Figure 6.**

Copyright © 1998–2013, Texas Instruments Incorporated

## Typical Performance Characteristics (Reference) (continued)

$T_J$ = 25°C, FEEDBACK pin shorted to $V^-$ = 0V, unless otherwise noted

**Reference Voltage vs. Reference Current**

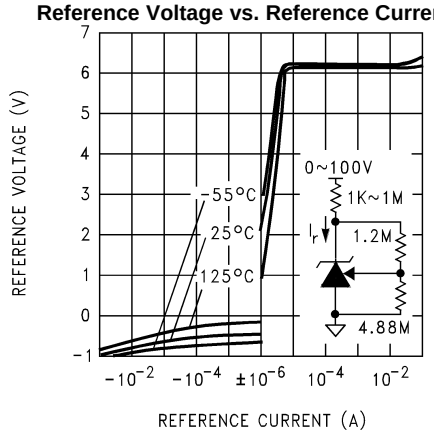


**Figure 7.**

**Reference AC Stability Range**

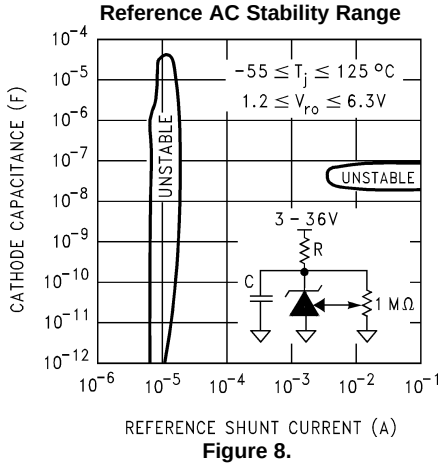


**Figure 8.**

**FEEDBACK Current vs. FEEDBACK-to-Anode Voltage**

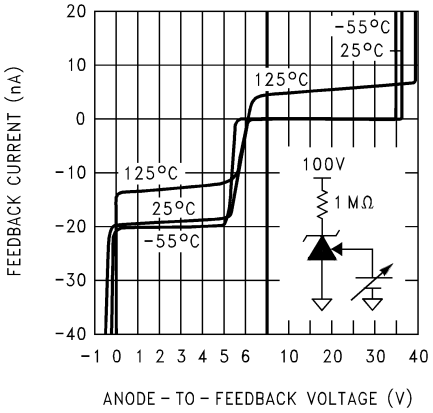


**Figure 9.**

**FEEDBACK Current vs. FEEDBACK-to-Anode Voltage**

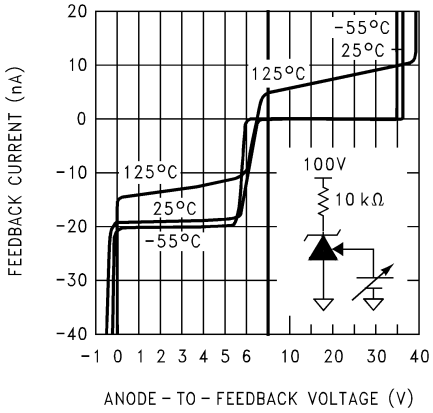


**Figure 10.**

**Reference Noise Voltage vs. Frequency**

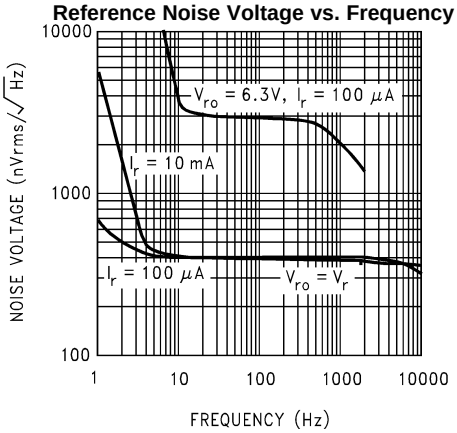


**Figure 11.**

**Reference Small-Signal Resistance vs. Frequency**

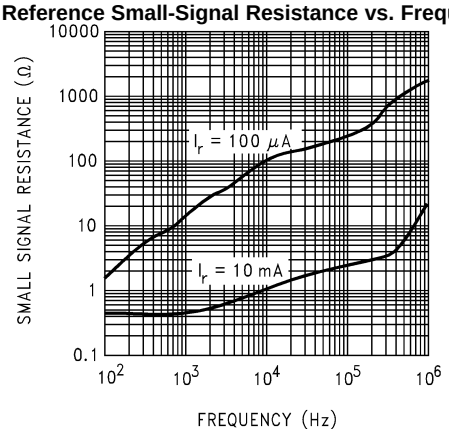


**Figure 12.**


Copyright © 1998–2013, Texas Instruments Incorporated

## Typical Performance Characteristics (Reference) (continued)

$T_J$ = 25°C, FEEDBACK pin shorted to $V^-$ = 0V, unless otherwise noted

**Reference Power-Up Time**

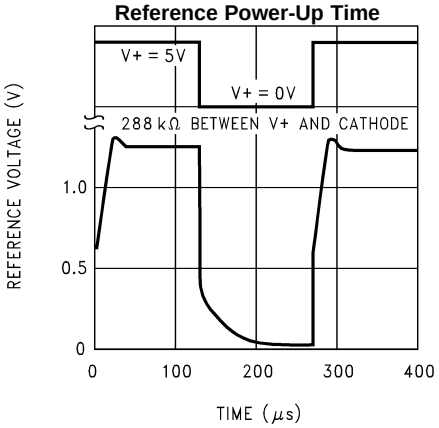


**Figure 13.**

**Reference Voltage with FEEDBACK Voltage Step**

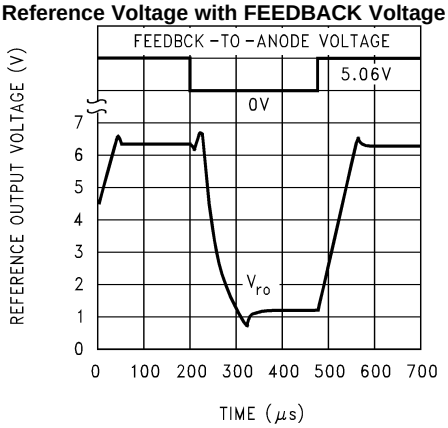


**Figure 14.**

**Reference Voltage with 100~12 µA Current Step**

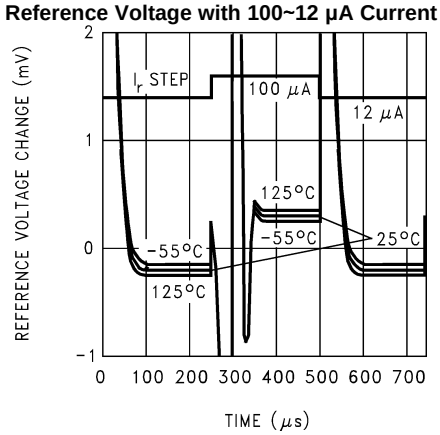


**Figure 15.**

**Reference Step Response for 100 µA ~ 10 mA Current Step**

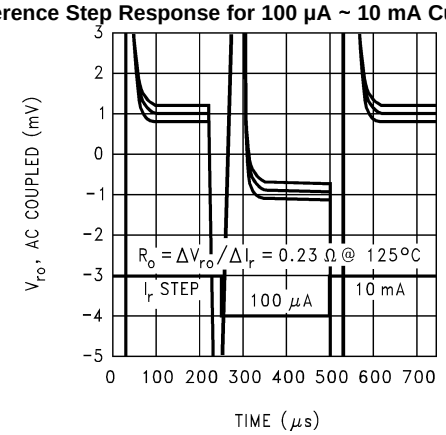


**Figure 16.**

**Reference Voltage Change with Supply Voltage Step**

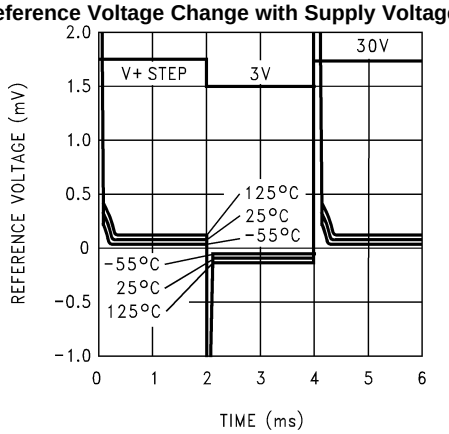


**Figure 17.**

Copyright © 1998–2013, Texas Instruments Incorporated

## Typical Performance Characteristics (Op Amps)

$V^+$ = 5V, $V^-$ = GND = 0V, $V_{CM}$ = $V^+$/2, $V_{OUT}$ = $V^+$/2, $T_J$ = 25°C, unless otherwise noted

**Input Common-Mode Voltage Range vs. Temperature**

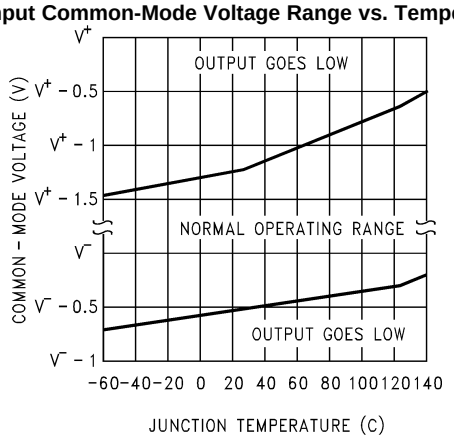


**Figure 18.**

**$V_{OS}$ vs. Junction Temperature on 9 Representative Units**

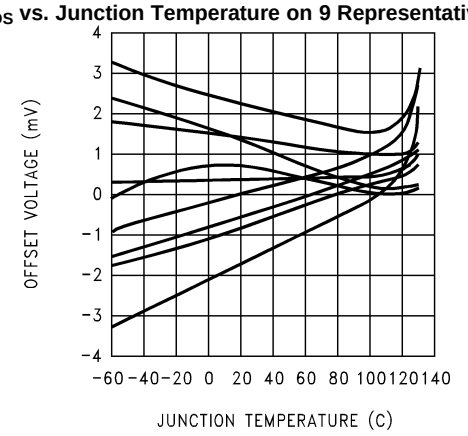


**Figure 19.**

**Input Bias Current vs. Common-Mode Voltage**

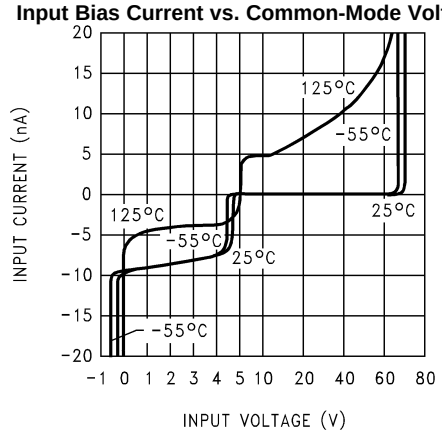


**Figure 20.**

**Slew Rate vs. Temperature and Output Sink Current**

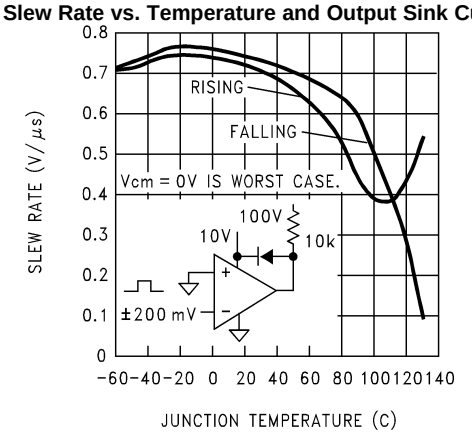


**Figure 21.**

**Large-Signal Step Response**

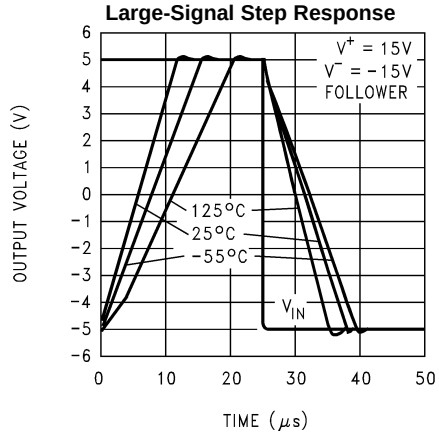


**Figure 22.**

**Output Voltage Swing vs. Temp. and Current**

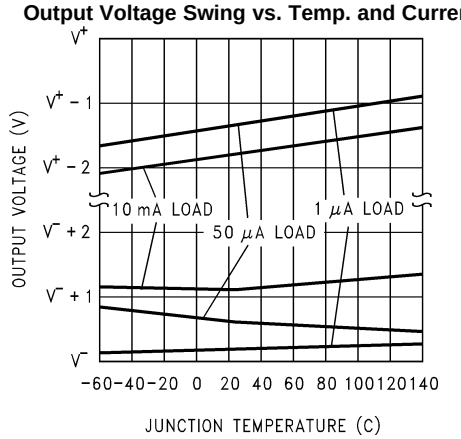


**Figure 23.**


Copyright © 1998–2013, Texas Instruments Incorporated

## Typical Performance Characteristics (Op Amps) (continued)

$V^+ = 5V$, $V^- = GND = 0V$, $V_{CM} = V^+/2$, $V_{OUT} = V^+/2$, $T_J = 25°C$, unless otherwise noted

**Output Source Current vs. Output Voltage and Temp.**

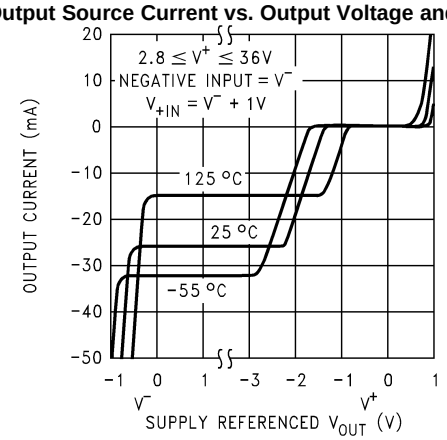


**Figure 24.**

**Output Sink Current vs. Output Voltage and Temp.**

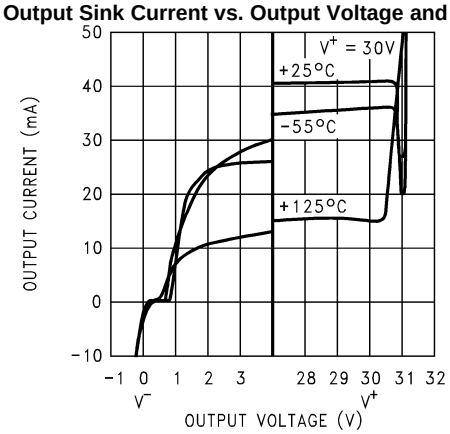


**Figure 25.**

**Output Swing, Large Signal**

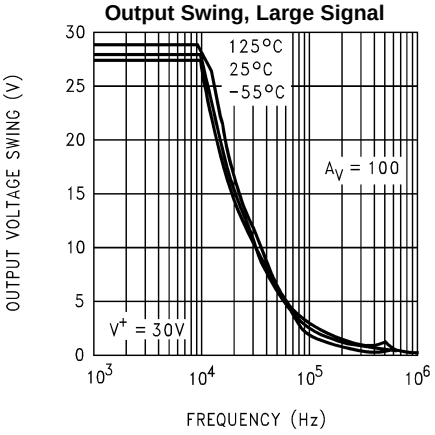


**Figure 26.**

**Output Impedance vs. Frequency and Gain**

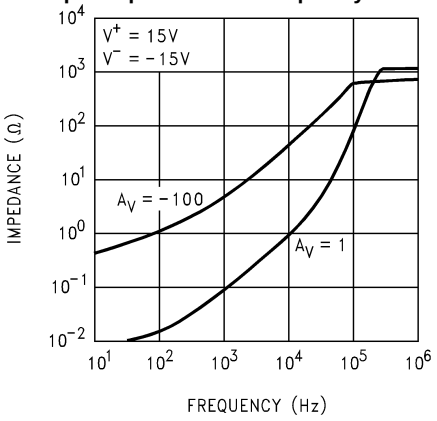


**Figure 27.**

**Small-Signal Pulse Response vs. Temp.**

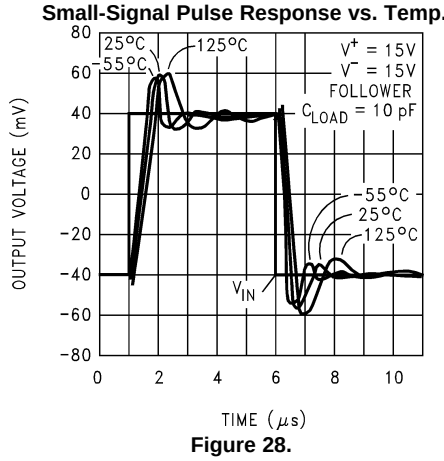


**Figure 28.**

**Small-Signal Pulse Response vs. Load**

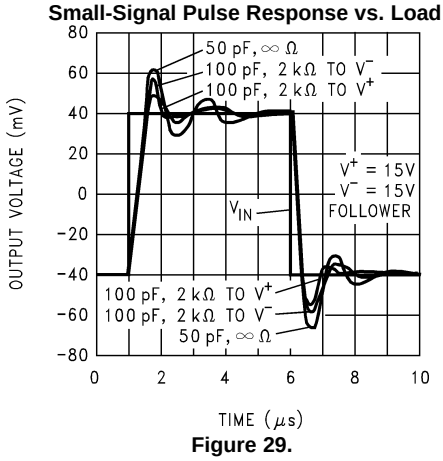


**Figure 29.**

Copyright © 1998–2013, Texas Instruments Incorporated

## Typical Performance Characteristics (Op Amps) (continued)

$V^+$ = 5V, $V^-$ = GND = 0V, $V_{CM}$ = $V^+$/2, $V_{OUT}$ = $V^+$/2, $T_J$ = 25°C, unless otherwise noted

**Op Amp Voltage Noise vs. Frequency**

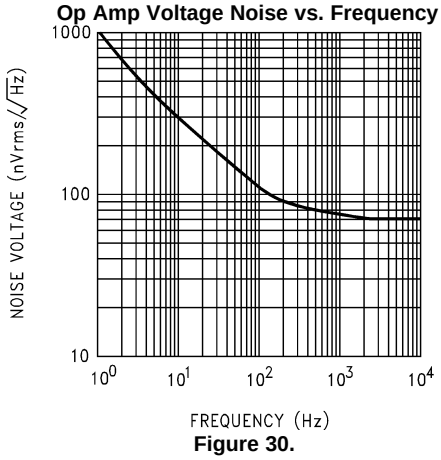


**Figure 30.**

**Op Amp Current Noise vs. Frequency**

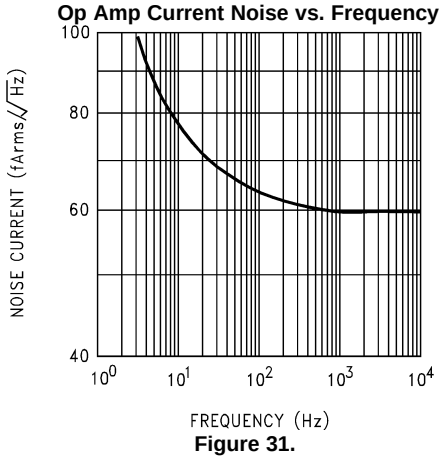


**Figure 31.**

**Small-Signal Voltage Gain vs. Frequency and Temperature**

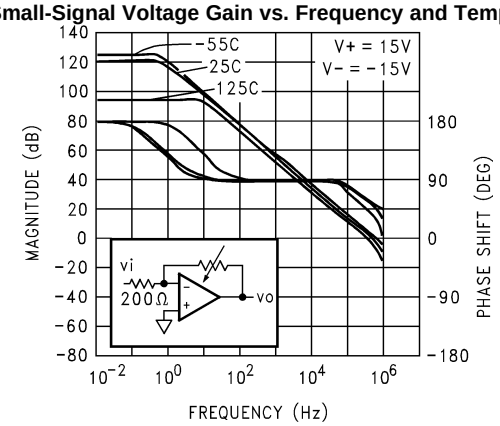


**Figure 32.**

**Small-Signal Voltage Gain vs. Frequency and Load**

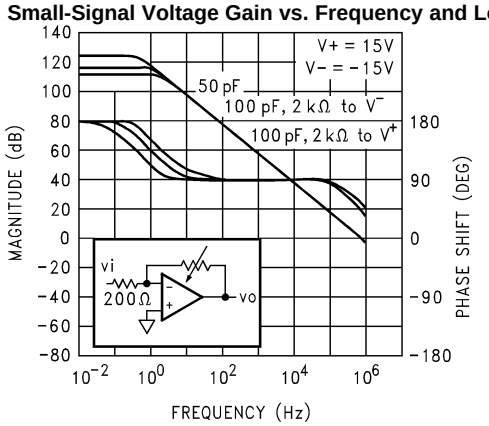


**Figure 33.**

**Follower Small-Signal Frequency Response**

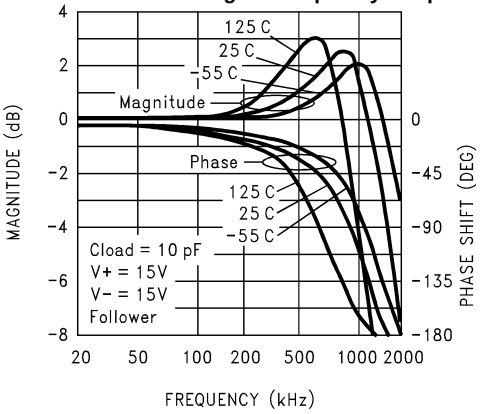


**Figure 34.**

**Common-Mode Input Voltage Rejection Ratio**

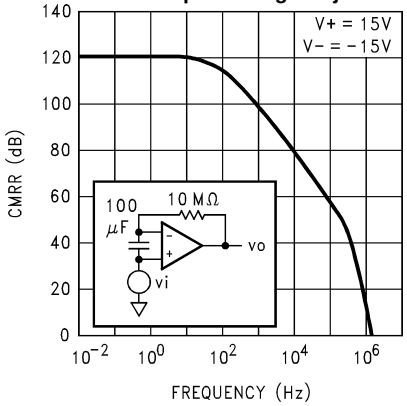


**Figure 35.**


Copyright © 1998–2013, Texas Instruments Incorporated

## Typical Performance Characteristics (Op Amps) (continued)

$V^+$ = 5V, $V^-$ = GND = 0V, $V_{CM}$ = $V^+/2$, $V_{OUT}$ = $V^+/2$, $T_J$ = 25°C, unless otherwise noted

**Power Supply Current vs. Power Supply Voltage**

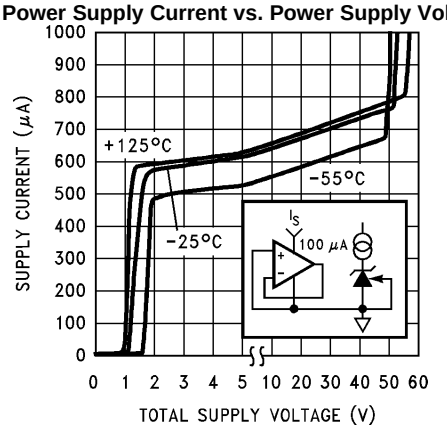


**Figure 36.**

**Positive Power Supply Voltage Rejection Ratio**

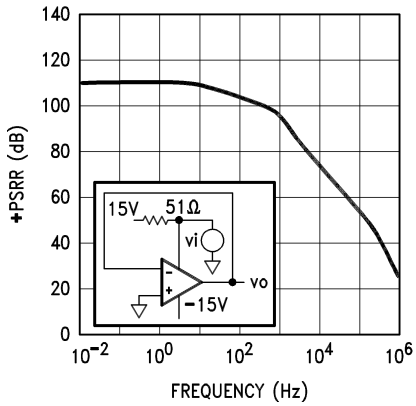


**Figure 37.**

**Negative Power Supply Voltage Rejection Ratio**

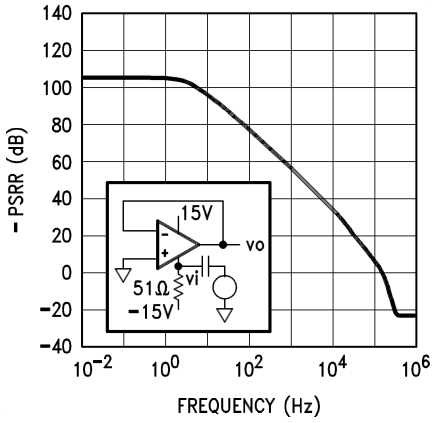


**Figure 38.**

**Input Offset Current vs. Junction Temperature**

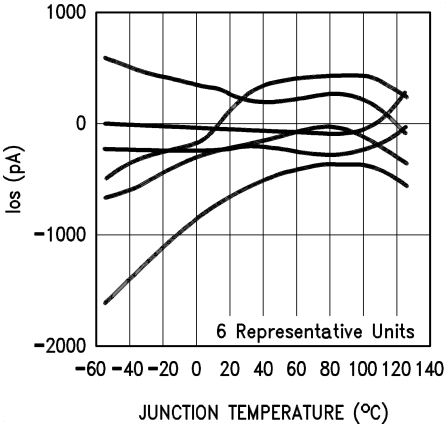


**Figure 39.**

**Input Bias Current vs. Junction Temperature**

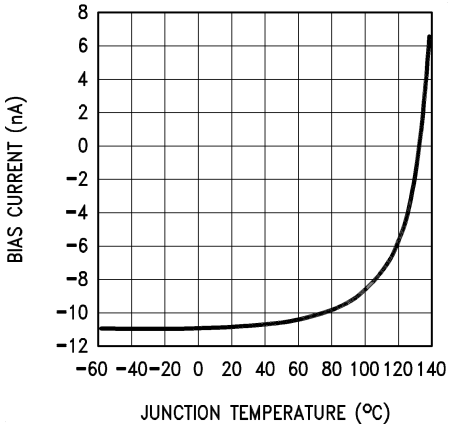


**Figure 40.**

Copyright © 1998–2013, Texas Instruments Incorporated

## Typical Performance Distributions

**Average $V_{OS}$ Drift Industrial Temperature Range**

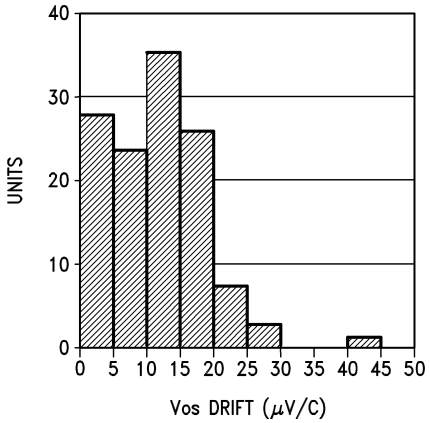


**Figure 41.**

**Average $V_{OS}$ Drift Commercial Temperature Range**

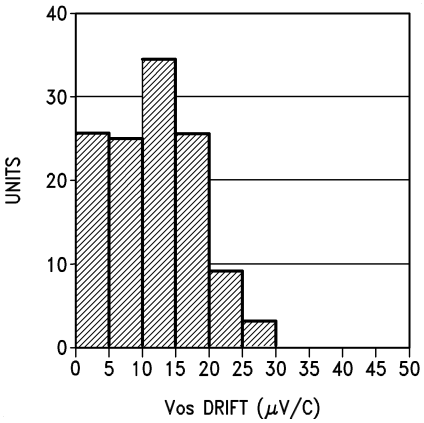


**Figure 42.**

**Average $I_{OS}$ Drift Industrial Temperature Range**

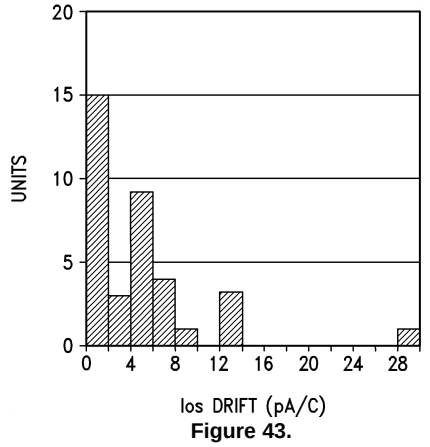


**Figure 43.**

**Average $I_{OS}$ Drift Commercial Temperature Range**

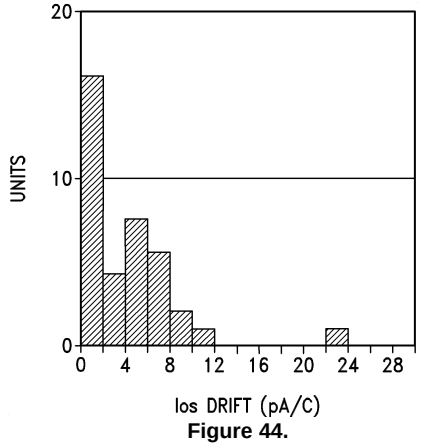


**Figure 44.**

**Voltage Reference Broad-BandNoise Distribution**

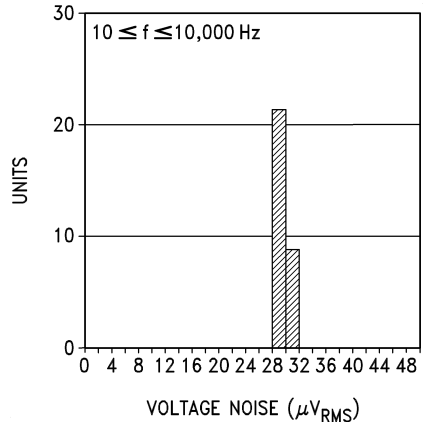


**Figure 45.**

**Op Amp Voltage Noise Distribution**

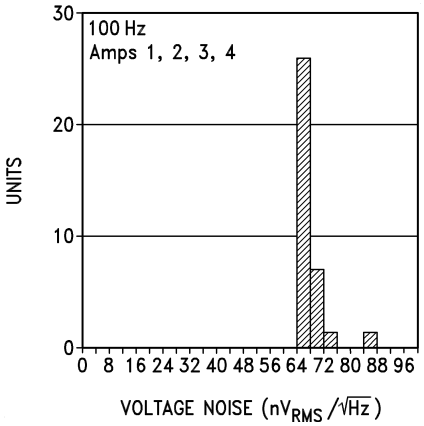


**Figure 46.**


Copyright © 1998–2013, Texas Instruments Incorporated

## Typical Performance Distributions (continued)

**Op Amp Current Noise Distribution**

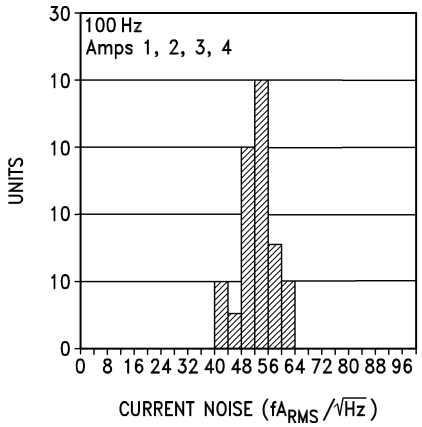


**Figure 47.**

# APPLICATION INFORMATION

## VOLTAGE REFERENCE

### Reference Biasing

The voltage reference is of a shunt regulator topology that models as a simple zener diode. With current $I_r$ flowing in the "forward" direction there is the familiar diode transfer function. $I_r$ flowing in the reverse direction forces the reference voltage to be developed from cathode to anode. The cathode may swing from a diode drop below $V^-$ to the reference voltage or to the avalanche voltage of the parallel protection diode, nominally 7V. A 5.0V reference with $V^+$ = 3V is allowed.

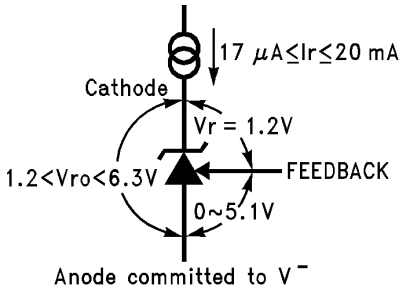


**Figure 48. Voltages Associated with Reference (Current Source $I_r$ is External)**

The reference equivalent circuit reveals how $V_r$is held at the constant 1.2V by feedback, and how the FEEDBACK pin passes little current.

To generate the required reverse current, typically a resistor is connected from a supply voltage higher than the reference voltage. Varying that voltage, and so varying $I_r$, has small effect with the equivalent series resistance of less than an ohm at the higher currents. Alternatively, an active current source, such as the LM134 series, may generate $I_r$.

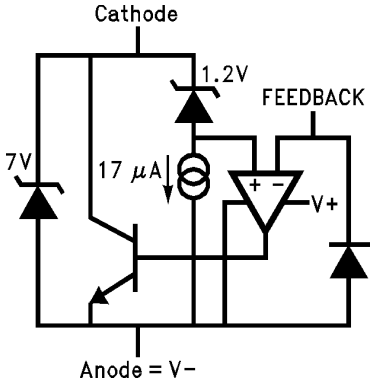


**Figure 49. Reference Equivalent Circuit**

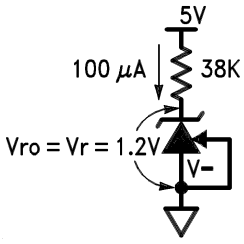


**Figure 50. 1.2V Reference**


Copyright © 1998–2013, Texas Instruments Incorporated

Capacitors in parallel with the reference are allowed. See Reference AC Stability Range typical curve for capacitance values—from 20 µA to 3 mA any capacitor value is stable. With the reference's wide stability range with resistive and capacitive loads, a wide range of RC filter values will perform noise filtering.

### Adjustable Reference

The FEEDBACK pin allows the reference output voltage, $V_{ro}$, to vary from 1.24V to 5.0V. The reference attempts to hold $V_r$ at 1.24V. If $V_r$ is above 1.24V, the reference will conduct current from Cathode to Anode; FEEDBACK current always remains low. If FEEDBACK is connected to Anode, then $V_{ro} = V_r = 1.24V$. For higher voltages FEEDBACK is held at a constant voltage above Anode—say 3.76V for $V_{ro} = 5V$. Connecting a resistor across the constant $V_r$ generates a current $I=V_r/R1$ flowing from Cathode into FEEDBACK node. A Thevenin equivalent 3.76V is generated from FEEDBACK to Anode with R2=3.76/I. For a 1% error, use R1 such that I is greater than one hundred times the FEEDBACK bias current. For example, keep I ≥ 5.5µA.

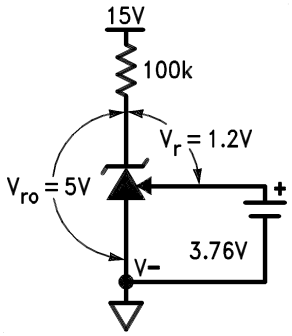


**Figure 51. Thevenin Equivalent of Reference with 5V Output**

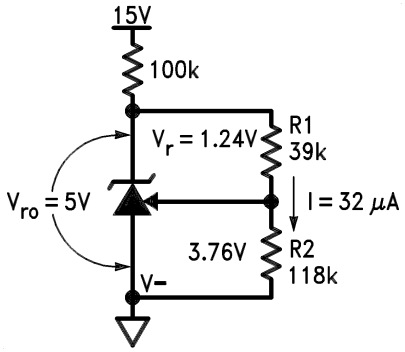


R1 = Vr/I = 1.24/32µ = 39k
R2 = R1 {(Vro/Vr) − 1} = 39k {(5/1.24) − 1)} = 118k

**Figure 52. Resistors R1 and R2 Program Reference Output Voltage to be 5V**

Understanding that $V_r$ is fixed and that voltage sources, resistors, and capacitors may be tied to the FEEDBACK pin, a range of $V_r$ temperature coefficients may be synthesized.

Copyright © 1998–2013, Texas Instruments Incorporated

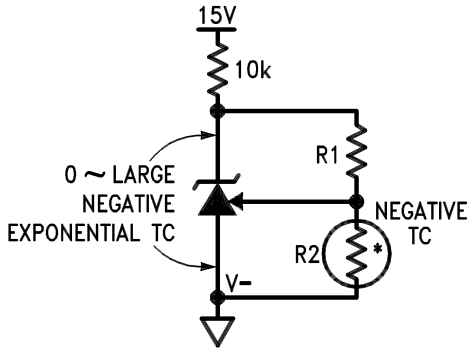


**Figure 53. Output Voltage has Negative Temperature Coefficient (TC) if R2 has Negative TC**

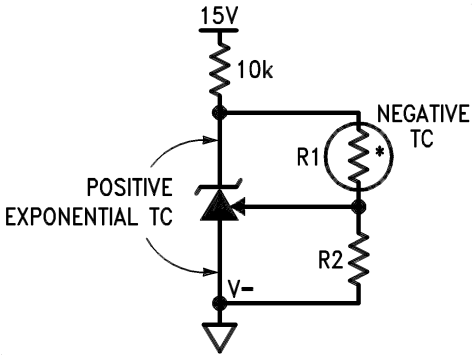


**Figure 54. Output Voltage has Positive TC if R1 has Negative TC**

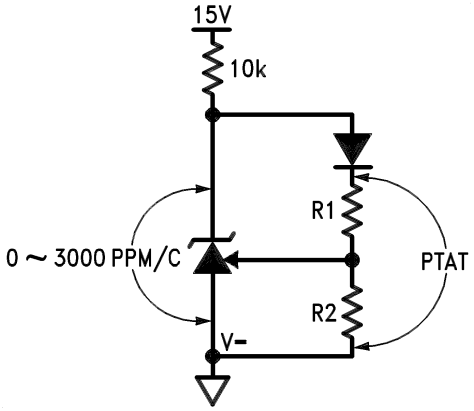


**Figure 55. Diode in Series with R1 Causes Voltage across R1 and R2 to be Proportional to Absolute Temperature (PTAT)**

Connecting a resistor across Cathode-to-FEEDBACK creates a 0 TC current source, but a range of TCs may be synthesized.


Copyright © 1998–2013, Texas Instruments Incorporated

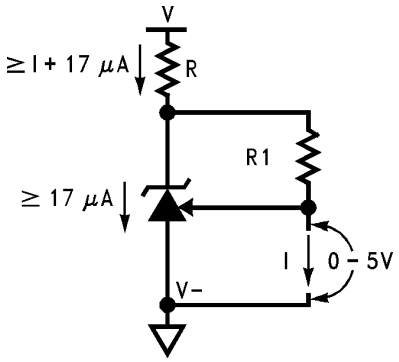


I = Vr/R1 = 1.24/R1

**Figure 56. Current Source is Programmed by R1**

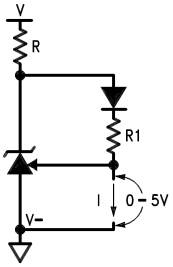


**Figure 57. Proportional-to-Absolute-Temperature Current Source**

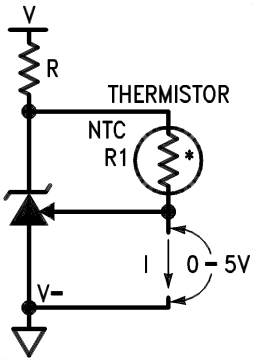


**Figure 58. Negative-TC Current Source**

### Hysteresis

The reference voltage depends, slightly, on the thermal history of the die. Competitive micro-power products vary—always check the data sheet for any given device. Do not assume that no specification means no hysteresis.

Copyright © 1998–2013, Texas Instruments Incorporated

## OPERATIONAL AMPLIFIERS

Any amp or the reference may be biased in any way with no effect on the other amps or reference, except when a substrate diode conducts (see Electrical Characteristics). One amp input may be outside the common-mode range, another amp may be operated as a comparator, another with all terminals floating with no effect on the others (tying inverting input to output and non-inverting input to $V^-$ on unused amps is preferred). Choosing operating points that cause oscillation, such as driving too large a capacitive load, is best avoided.

### Op Amp Output Stage

These op amps, like their LM124 series, have flexible and relatively wide-swing output stages. There are simple rules to optimize output swing, reduce cross-over distortion, and optimize capacitive drive capability:

1. Output Swing: Unloaded, the 42µA pull-down will bring the output within 300 mV of $V^-$ over the military temperature range. If more than 42µA is required, a resistor from output to $V^-$ will help. Swing across any load may be improved slightly if the load can be tied to $V^+$, at the cost of poorer sinking open-loop voltage gain
2. Cross-over Distortion: The LM614 has lower cross-over distortion (a 1 $V_{BE}$ deadband versus 3 $V_{BE}$ for the LM124), and increased slew rate as shown in the characteristic curves. A resistor pull-up or pull-down will force class-A operation with only the PNP or NPN output transistor conducting, eliminating cross-over distortion
3. Capacitive Drive: Limited by the output pole caused by the output resistance driving capacitive loads, a pull-down resistor conducting 1 mA or more reduces the output stage NPN $r_e$ until the output resistance is that of the current limit 25Ω. 200pF may then be driven without oscillation.

### Op Amp Input Stage

The lateral PNP input transistors, unlike most op amps, have $BV_{EBO}$ equal to the absolute maximum supply voltage. Also, they have no diode clamps to the positive supply nor across the inputs. These features make the inputs look like high impedances to input sources producing large differential and common-mode voltages.

### Typical Applications

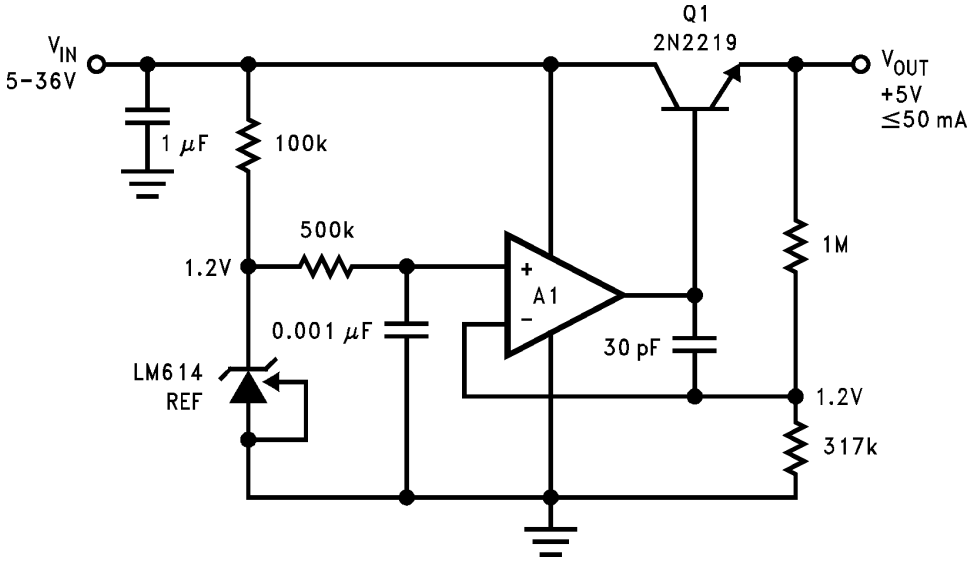


**Figure 59. Simple Low Quiescent Drain Voltage Regulator. Total supply current approximately 320µA, when $V_{IN}$ = +5V.**


Copyright © 1998–2013, Texas Instruments Incorporated

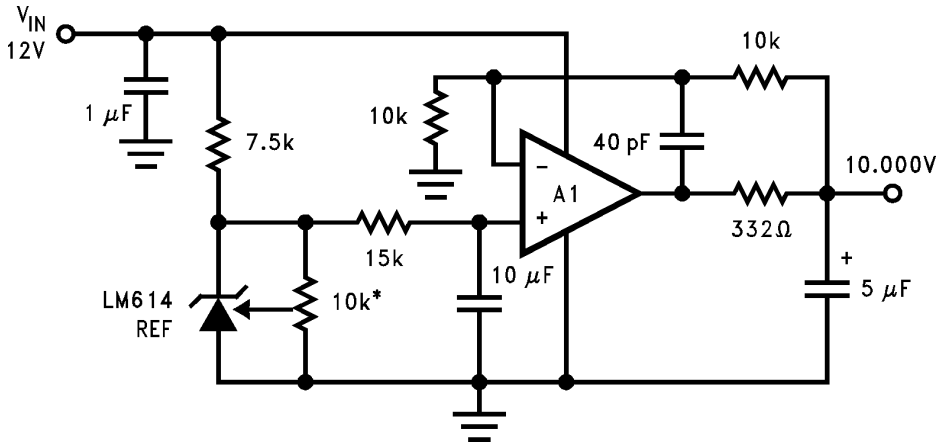


*10k must be low
t.c. trimpot.

**Figure 60. Ultra Low Noise 10.00V Reference.**
**Total output noise is typically 14μ$V_{RMS}$.**

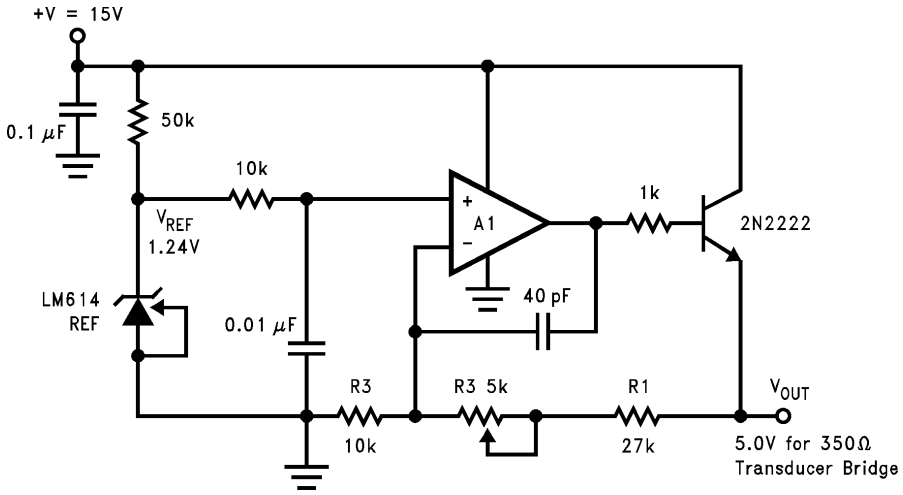


$V_{OUT} = (R_1 / Pe + 1)\ V_{REF}$
$R_1$, $R_2$ should be 1% metal film
$P_\beta$ should be low T.C. trim pot

**Figure 61. Slow Rise Time Upon Power-Up, Adjustable Transducer Bridge Driver.**
**Rise time is approximately 1ms.**

Copyright © 1998–2013, Texas Instruments Incorporated

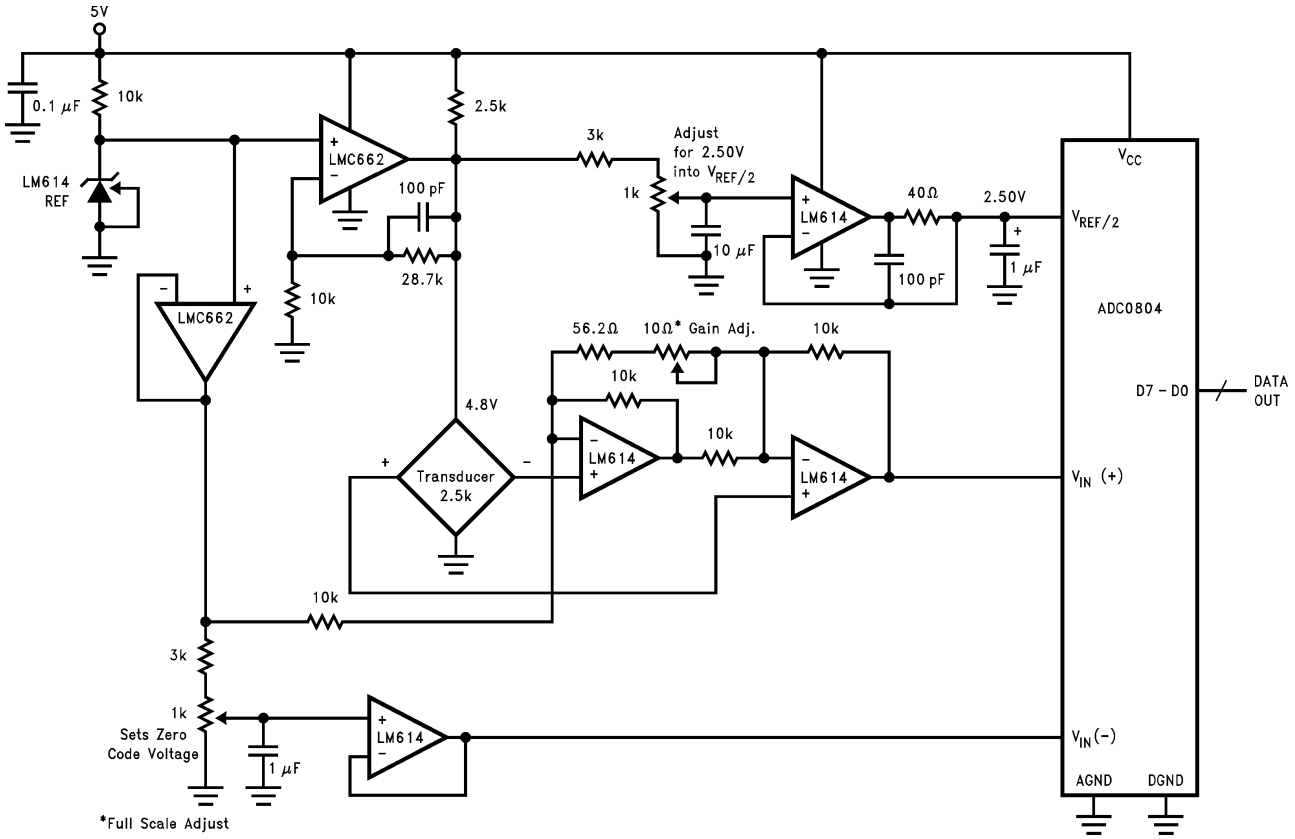


(1) Set zero code voltage, then adjust 10Ω gain adjust pot for full scale.

**Figure 62. Transducer Data Acquisition System.**


Copyright © 1998–2013, Texas Instruments Incorporated

## Simplified Schematic Diagrams

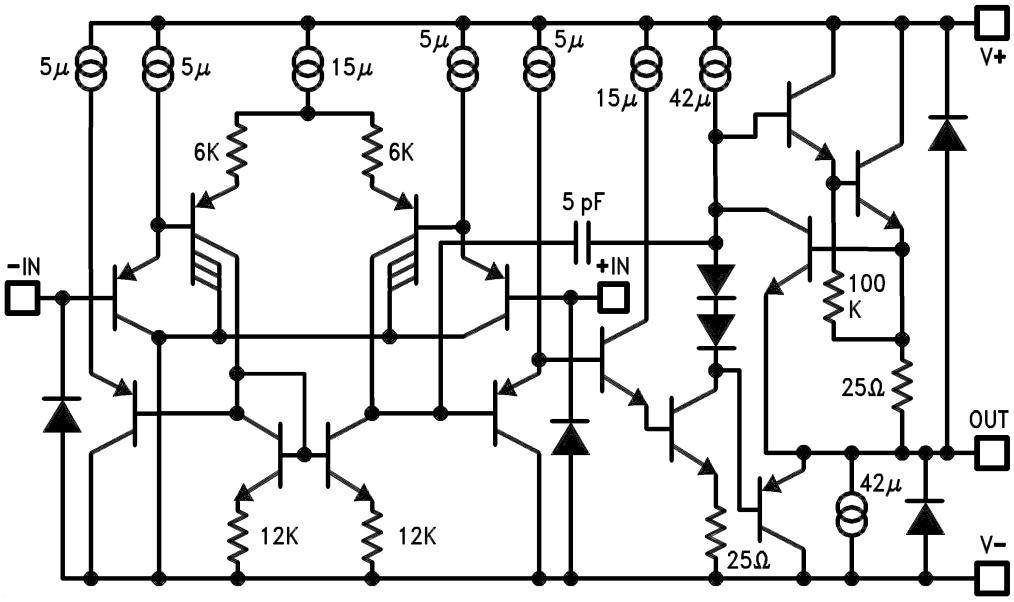


**Figure 63. Op Amp**

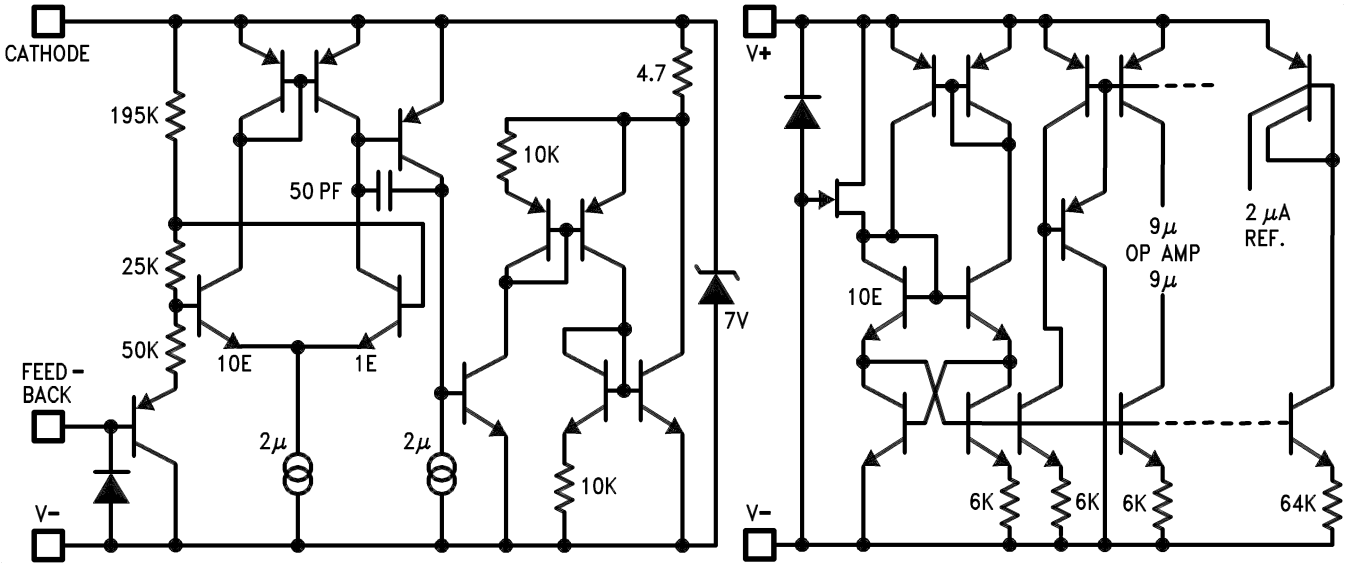


**Figure 64. Reference / Bias**

## REVISION HISTORY

| Changes from Revision B (March 2013) to Revision C | Page |
|---|---|
| • Changed layout of National Data Sheet to TI format | 21 |


Copyright © 1998–2013, Texas Instruments Incorporated

## PACKAGING INFORMATION

| Orderable Device | Status (1) | Package Type | Package Drawing | Pins | Package Qty | Eco Plan (2) | Lead/Ball Finish (6) | MSL Peak Temp (3) | Op Temp (°C) | Device Marking (4/5) | Samples |
|---|---|---|---|---|---|---|---|---|---|---|---|
| LM614 MDC | ACTIVE | DIESALE | Y | 0 | 100 | Green (RoHS & no Sb/Br) | Call TI | Level-1-NA-UNLIM | -40 to 85 | | Samples |
| LM614CWM/NOPB | ACTIVE | SOIC | DW | 16 | 45 | Green (RoHS & no Sb/Br) | CU SN | Level-3-260C-168 HR | 0 to 70 | LM614CWM | Samples |
| LM614IWM | LIFEBUY | SOIC | DW | 16 | 45 | TBD | Call TI | Call TI | 0 to 70 | LM614IWM | |
| LM614IWM/NOPB | ACTIVE | SOIC | DW | 16 | 45 | Green (RoHS & no Sb/Br) | CU SN | Level-3-260C-168 HR | 0 to 70 | LM614IWM | Samples |

(1) The marketing status values are defined as follows:
**ACTIVE:** Product device recommended for new designs.
**LIFEBUY:** TI has announced that the device will be discontinued, and a lifetime-buy period is in effect.
**NRND:** Not recommended for new designs. Device is in production to support existing customers, but TI does not recommend using this part in a new design.
**PREVIEW:** Device has been announced but is not in production. Samples may or may not be available.
**OBSOLETE:** TI has discontinued the production of the device.

(2) Eco Plan - The planned eco-friendly classification: Pb-Free (RoHS), Pb-Free (RoHS Exempt), or Green (RoHS & no Sb/Br) - please check http://www.ti.com/productcontent for the latest availability information and additional product content details.
**TBD:** The Pb-Free/Green conversion plan has not been defined.
**Pb-Free (RoHS):** TI's terms "Lead-Free" or "Pb-Free" mean semiconductor products that are compatible with the current RoHS requirements for all 6 substances, including the requirement that lead not exceed 0.1% by weight in homogeneous materials. Where designed to be soldered at high temperatures, TI Pb-Free products are suitable for use in specified lead-free processes.
**Pb-Free (RoHS Exempt):** This component has a RoHS exemption for either 1) lead-based flip-chip solder bumps used between the die and package, or 2) lead-based die adhesive used between the die and leadframe. The component is otherwise considered Pb-Free (RoHS compatible) as defined above.
**Green (RoHS & no Sb/Br):** TI defines "Green" to mean Pb-Free (RoHS compatible), and free of Bromine (Br) and Antimony (Sb) based flame retardants (Br or Sb do not exceed 0.1% by weight in homogeneous material)

(3) MSL, Peak Temp. - The Moisture Sensitivity Level rating according to the JEDEC industry standard classifications, and peak solder temperature.

(4) There may be additional marking, which relates to the logo, the lot trace code information, or the environmental category on the device.

(5) Multiple Device Markings will be inside parentheses. Only one Device Marking contained in parentheses and separated by a "~" will appear on a device. If a line is indented then it is a continuation of the previous line and the two combined represent the entire Device Marking for that device.

(6) Lead/Ball Finish - Orderable Devices may have multiple material finish options. Finish options are separated by a vertical ruled line. Lead/Ball Finish values may wrap to two lines if the finish value exceeds the maximum column width.

**Important Information and Disclaimer:**The information provided on this page represents TI's knowledge and belief as of the date that it is provided. TI bases its knowledge and belief on information provided by third parties, and makes no representation or warranty as to the accuracy of such information. Efforts are underway to better integrate information from third parties. TI has taken and continues to take reasonable steps to provide representative and accurate information but may not have conducted destructive testing or chemical analysis on incoming materials and chemicals. TI and TI suppliers consider certain information to be proprietary, and thus CAS numbers and other limited information may not be available for release.

In no event shall TI's liability arising out of such information exceed the total purchase price of the TI part(s) at issue in this document sold by TI to Customer on an annual basis.

DW (R–PDSO–G16) PLASTIC SMALL OUTLINE

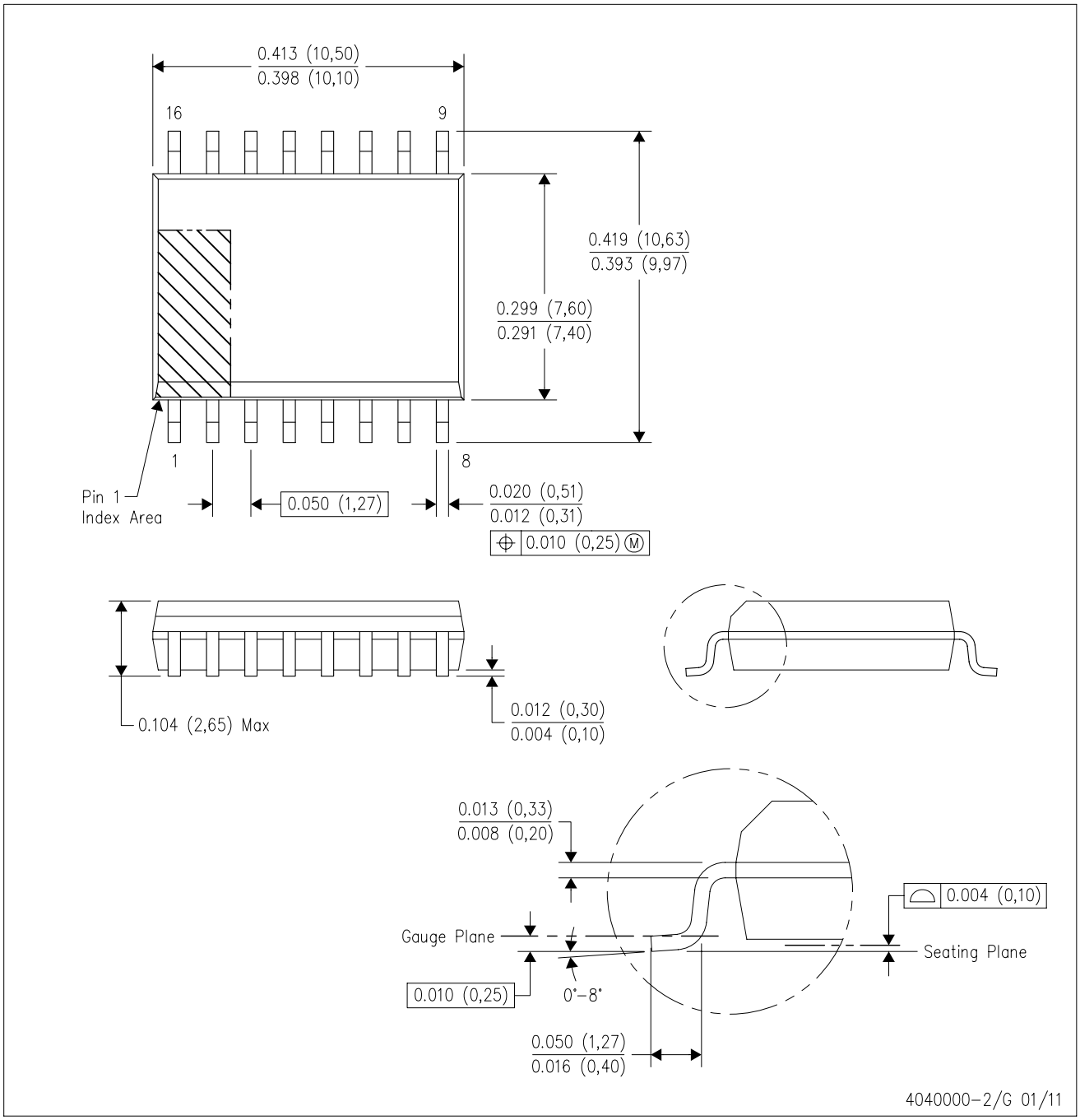


NOTES:
A. All linear dimensions are in inches (millimeters). Dimensioning and tolerancing per ASME Y14.5M–1994.
B. This drawing is subject to change without notice.
C. Body dimensions do not include mold flash or protrusion not to exceed 0.006 (0,15).
D. Falls within JEDEC MS–013 variation AA.

## IMPORTANT NOTICE

Texas Instruments Incorporated and its subsidiaries (TI) reserve the right to make corrections, enhancements, improvements and other changes to its semiconductor products and services per JESD46, latest issue, and to discontinue any product or service per JESD48, latest issue. Buyers should obtain the latest relevant information before placing orders and should verify that such information is current and complete. All semiconductor products (also referred to herein as “components”) are sold subject to TI’s terms and conditions of sale supplied at the time of order acknowledgment.

TI warrants performance of its components to the specifications applicable at the time of sale, in accordance with the warranty in TI’s terms and conditions of sale of semiconductor products. Testing and other quality control techniques are used to the extent TI deems necessary to support this warranty. Except where mandated by applicable law, testing of all parameters of each component is not necessarily performed.

TI assumes no liability for applications assistance or the design of Buyers’ products. Buyers are responsible for their products and applications using TI components. To minimize the risks associated with Buyers’ products and applications, Buyers should provide adequate design and operating safeguards.

TI does not warrant or represent that any license, either express or implied, is granted under any patent right, copyright, mask work right, or other intellectual property right relating to any combination, machine, or process in which TI components or services are used. Information published by TI regarding third-party products or services does not constitute a license to use such products or services or a warranty or endorsement thereof. Use of such information may require a license from a third party under the patents or other intellectual property of the third party, or a license from TI under the patents or other intellectual property of TI.

Reproduction of significant portions of TI information in TI data books or data sheets is permissible only if reproduction is without alteration and is accompanied by all associated warranties, conditions, limitations, and notices. TI is not responsible or liable for such altered documentation. Information of third parties may be subject to additional restrictions.

Resale of TI components or services with statements different from or beyond the parameters stated by TI for that component or service voids all express and any implied warranties for the associated TI component or service and is an unfair and deceptive business practice. TI is not responsible or liable for any such statements.

Buyer acknowledges and agrees that it is solely responsible for compliance with all legal, regulatory and safety-related requirements concerning its products, and any use of TI components in its applications, notwithstanding any applications-related information or support that may be provided by TI. Buyer represents and agrees that it has all the necessary expertise to create and implement safeguards which anticipate dangerous consequences of failures, monitor failures and their consequences, lessen the likelihood of failures that might cause harm and take appropriate remedial actions. Buyer will fully indemnify TI and its representatives against any damages arising out of the use of any TI components in safety-critical applications.

In some cases, TI components may be promoted specifically to facilitate safety-related applications. With such components, TI’s goal is to help enable customers to design and create their own end-product solutions that meet applicable functional safety standards and requirements. Nonetheless, such components are subject to these terms.

No TI components are authorized for use in FDA Class III (or similar life-critical medical equipment) unless authorized officers of the parties have executed a special agreement specifically governing such use.

Only those TI components which TI has specifically designated as military grade or “enhanced plastic” are designed and intended for use in military/aerospace applications or environments. Buyer acknowledges and agrees that any military or aerospace use of TI components which have ***not*** been so designated is solely at the Buyer's risk, and that Buyer is solely responsible for compliance with all legal and regulatory requirements in connection with such use.

TI has specifically designated certain components as meeting ISO/TS16949 requirements, mainly for automotive use. In any case of use of non-designated products, TI will not be responsible for any failure to meet ISO/TS16949.

| **Products** | | **Applications** | |
|---|---|---|---|
| Audio | www.ti.com/audio | Automotive and Transportation | www.ti.com/automotive |
| Amplifiers | amplifier.ti.com | Communications and Telecom | www.ti.com/communications |
| Data Converters | dataconverter.ti.com | Computers and Peripherals | www.ti.com/computers |
| DLP® Products | www.dlp.com | Consumer Electronics | www.ti.com/consumer-apps |
| DSP | dsp.ti.com | Energy and Lighting | www.ti.com/energy |
| Clocks and Timers | www.ti.com/clocks | Industrial | www.ti.com/industrial |
| Interface | interface.ti.com | Medical | www.ti.com/medical |
| Logic | logic.ti.com | Security | www.ti.com/security |
| Power Mgmt | power.ti.com | Space, Avionics and Defense | www.ti.com/space-avionics-defense |
| Microcontrollers | microcontroller.ti.com | Video and Imaging | www.ti.com/video |
| RFID | www.ti-rfid.com | | |
| OMAP Applications Processors | www.ti.com/omap | **TI E2E Community** | e2e.ti.com |
| Wireless Connectivity | www.ti.com/wirelessconnectivity | | |

Mailing Address: Texas Instruments, Post Office Box 655303, Dallas, Texas 75265
Copyright © 2016, Texas Instruments Incorporated