LM5145EVM-HD-20A High Density Evaluation Module

The LM5145EVM-HD-20A 100-W high density evaluation module (EVM) is a synchronous buck DC-DC regulator that employs synchronous rectification to achieve high conversion efficiency in a small footprint. It operates over a wide input voltage range of 24 V to 72 V providing a regulated 5-V output. The output voltage has better than 1% setpoint accuracy and is adjustable using an external resistor or voltage source, permitting the user to customize the output voltage from 3.3 V to 8 V as needed.

The module design uses the LM5145 75-V synchronous buck controller with wide input voltage (wide V_{IN}) range, wide duty cycle range, voltage-mode PWM control loop, integrated high-side and low-side MOSFET gate drivers, cycle-by-cycle overcurrent protection, precision enable, and power supply tracking features. The EVM's free-running switching frequency is 220 kHz and is synchronizable to a higher or lower frequency if required. Moreover, a synchronization output signal (SYNCOUT) 180° phase-shifted relative to the internal clock is available for master-slave configurations. VCC voltage rail UVLO protects the converter at low input voltage conditions, and the EN/UVLO pin supports adjustable input UVLO for application specific power-up and power-down requirements.

The LM5145 is available in a 20-pin VQFN package with 3.5-mm × 4.5-mm footprint to enable DC-DC solutions with high density and low component count. Please consult the *LM5145 6-V to 75-V Synchronous Buck DC-DC Controller With Wide Duty Cycle Range* data sheet for more information. Use the LM5145 with WEBENCH® Power Designer to create a custom regulator design. Furthermore, the user can download the *LM5145 Quickstart Calculator* to optimize component selection and examine predicted efficiency performance across line and load ranges.

Contents

1 High Density EVM Description 3
1.1 Typical Applications 3
1.2 Features and Electrical Performance 3
2 EVM Performance Specifications 4
3 Application Circuit Diagram 5
4 EVM Photo 6
5 Test Setup and Procedure 6
5.1 Test Setup 6
5.2 Test Equipment 8
5.3 Recommended Test Setup 8
5.4 Test Procedure 8
6 Test Data and Performance Curves 9
6.1 Conversion Efficiency 9
6.2 Operating Waveforms 10
6.3 Thermal Performance 16
7 EVM Documentation 17
7.1 Schematic 17
7.2 Bill of Materials 18
7.3 PCB Layout 19
7.4 Assembly Drawings 21
8 Device and Documentation Support 22
8.1 Device Support 22
8.2 Documentation Support 22

List of Figures

1 LM5145 Synchronous Buck Regulator Simplified Schematic 5

Copyright © 2017, Texas Instruments Incorporated

2 LM5145 EVM Photo 6
3 EVM Test Setup 7
4 Conversion Efficiency, FPWM Mode (SYNCIN Tied High) 9
5 Conversion Efficiency, Diode Emulation Mode Enabled (SYNCIN Tied Low) 9
6 SW Node Voltage and Output Ripple, I_{OUT} = 20 A, V_{IN} = 48 V 10
7 SW Node and SYNCOUT Voltages, V_{IN} = 48 V 10
8 Load Transient Response, V_{IN} = 48 V, FPWM, 10 A to 20 A at 1 A/µs 11
9 Load Transient Response, V_{IN} = 48 V, FPWM, 0 A to 20 A at 1 A/µs 11
10 Input Voltage Rising Transient from 12 V to 72 V, I_{OUT} = 10 A (ENABLE Terminal Tied High) 12
11 Input Voltage Falling Transient From 72 V to 12 V, I_{OUT} = 10 A (ENABLE Terminal Tied High) 12
12 ENABLE ON, V_{IN} = 48 V, I_{OUT} = 20 A Resistive 13
13 ENABLE OFF, V_{IN} = 48 V, I_{OUT} = 20 A Resistive 13
14 Start-Up, V_{IN} = 48 V, I_{OUT} = 20 A Resistive 14
15 Shutdown, V_{IN} = 48 V, I_{OUT} = 20 A Resistive 14
16 Pre-Biased Start-up, V_{IN} = 48 V, I_{OUT} = 0 A 15
17 Thermal Performance at V_{IN} = 48 V, I_{OUT} = 10 A, 200 LFM Airflow 16
18 Thermal Performance at V_{IN} = 48 V, I_{OUT} = 15 A, 200 LFM Airflow 16
19 EVM Schematic 17
20 Top Copper (Top View) 19
21 Layer 2 Copper (Top View) 19
22 Layer 3 Copper (Top View) 20
23 Bottom Copper (Top View) 20
24 Top Assembly 21
25 Bottom Assembly 21

List of Tables

1 Electrical Performance Specifications 4
2 EVM Connections 6
3 Bill of Materials 18

Trademarks

WEBENCH is a registered trademark of Texas Instruments.
All other trademarks are the property of their respective owners.

Copyright © 2017, Texas Instruments Incorporated

1 High Density EVM Description

The LM5145EVM-HD-20A high density EVM is designed to use a regulated or non-regulated high-voltage input rail ranging from 24 V to 72 V to produce a tightly-regulated output voltage of 5 V at load currents up to 20 A. This wide V_{IN} range DC-DC solution offers outsized voltage rating and operating margin to withstand supply rail voltage transients.

The free-running switching frequency is 220 kHz and is synchronizable to an external clock signal at a higher or lower frequency. A high-current edge connector is available to connect VIN, VOUT, and GND power terminals. The power-train passive components selected for this EVM, including buck inductor and ceramic input and output capacitors, are available from multiple component vendors.

1.1 Typical Applications

- Distributed point-of-load (POL) regulator modules
- Industrial and commercial vehicles
- Battery-powered drones
- Network and computing voltage regulators
- RF power amplification, PoE, and IP camera systems

1.2 Features and Electrical Performance

- Tightly-regulated output voltage of 5 V with better than ±1% setpoint accuracy
- Wide input voltage operating range of 24 V to 72 V
- Full load current of 20 A available with recommended airflow of 200 LFM
- Switching frequency of 220 kHz externally synchronizable up or down
- Ultra-high power conversion efficiency across wide load current range
  - Full load efficiency of 94% and 92.5% at V_{IN} = 24 V and 48 V, respectively
  - 93% efficiency at half-rated load, V_{IN} = 48 V
- 24-mA no-load supply current at V_{IN} = 48 V
- Input π-stage EMI filter with resistive damping
  - Meets EN55022 / CISPR 22 EMI standards
- Voltage-mode control architecture provides fast line and load transient response
  - PWM line feedforward
  - Forced PWM (FPWM) or diode emulation mode operation
  - 94dB, 6.5-MHz voltage-loop error amplifier
- Integrated high-side and low-side power MOSFET gate drivers
  - 2.3-A and 3.5-A sink/source drive current capability
  - 14-ns adaptive dead-time control reduces power dissipation and MOSFET temperature rise
- Overcurrent protection (OCP) with valley current sensing using low-side MOSFET $R_{DS(on)}$
- Monotonic prebias output voltage start-up
- User-adjustable soft-start time set to 4 ms by 47-nF capacitor connected between SS/TRK and AGND
  - Option for output voltage tracking using master track signal connected to SS/TRK
- SYNCOUT signal 180° out-of-phase with internal clock
- PGOOD indicator with 20-kΩ pullup resistor to VCC
- Selectable forced-PWM (FPWM) or diode emulation (DEM) modes using SYNCIN pin
- Resistor-programmable input voltage UVLO with customizable hysteresis for applications with wide turnon and turnoff voltage difference
  - Input UVLO set to turn on and off at V_{IN} of 22 V and 19 V, respectively
- Fully assembled, tested, and proven PCB layout with 50-mm × 30-mm total footprint

Copyright © 2017, Texas Instruments Incorporated

2 EVM Performance Specifications

Table 1. Electrical Performance Specifications

PARAMETER	TEST CONDITIONS		MIN	TYP	MAX	UNIT
INPUT CHARACTERISTICS						
Input voltage range, V_{IN}	Operating		24	48	72	V
Input voltage turnon, $V_{IN(ON)}$	Adjusted using EN/UVLO divider resistors			22		V
Input voltage turnoff, $V_{IN(OFF)}$				19		V
Input voltage hysteresis, $V_{IN(HYS)}$				3		V
Input current, no load, $I_{IN(NL)}$	I_{OUT} = 0 A	V_{IN} = 24 V		26		mA
		V_{IN} = 48 V		24		mA
		V_{IN} = 72 V		20		mA
Input current, disabled, $I_{IN(OFF)}$	V_{EN} = 0 V	V_{IN} = 48 V		1		mA
OUTPUT CHARACTERISTICS						
Output voltage, V_{OUT} [1]			4.95	5.0	5.05	V
Output current, I_{OUT}	V_{IN} = 24 V to 75 V, Airflow = 200LFM [2]		0		20	A
Output voltage regulation, ΔV_{OUT}	Load regulation	I_{OUT} = 0 A to 20 A		0.2%		
	Line regulation	V_{IN} = 24 V to 72 V		0.2%		
Output voltage ripple, $V_{OUT(AC)}$	V_{IN} = 48 V, I_{OUT} = 10 A			25		mVrms
Output overcurrent protection, I_{OCP}	V_{IN} = 48 V			25		A
Soft-start time, t_{SS}	C_{SS} = 47 nF			4		ms
SYSTEM CHARACTERISTICS						
Switching frequency, $F_{SW(nom)}$	V_{IN} = 48 V			220		kHz
Half-load efficiency, η_{HALF} [1]	I_{OUT} = 10 A	V_{IN} = 24 V		95.5%		
		V_{IN} = 36 V		94.5%		
		V_{IN} = 48 V		94%		
		V_{IN} = 72 V		91%		
Full load efficiency, η_{FULL}	I_{OUT} = 20 A	V_{IN} = 24 V		94%		
		V_{IN} = 36 V		93.5%		
		V_{IN} = 48 V		92.5%		
		V_{IN} = 72 V		90.5%		
LM5145 junction temperature, T_J			–40		125	ºC

(1) The default output voltage of this EVM is 5 V. Efficiency and other performance metrics can change based on operating input voltage, load current, externally-connected output capacitance, and other parameters.

(2) The recommended airflow when operating at output currents greater than 10 A is 200 LFM.

Copyright © 2017, Texas Instruments Incorporated

3 Application Circuit Diagram

Figure 1 shows the schematic of an LM5145-based synchronous buck regulator (EMI filter stage not shown). Soft start (SS), current limit (ILIM), and UVLO (EN/UVLO) components are shown that are configurable as required by the specific application.

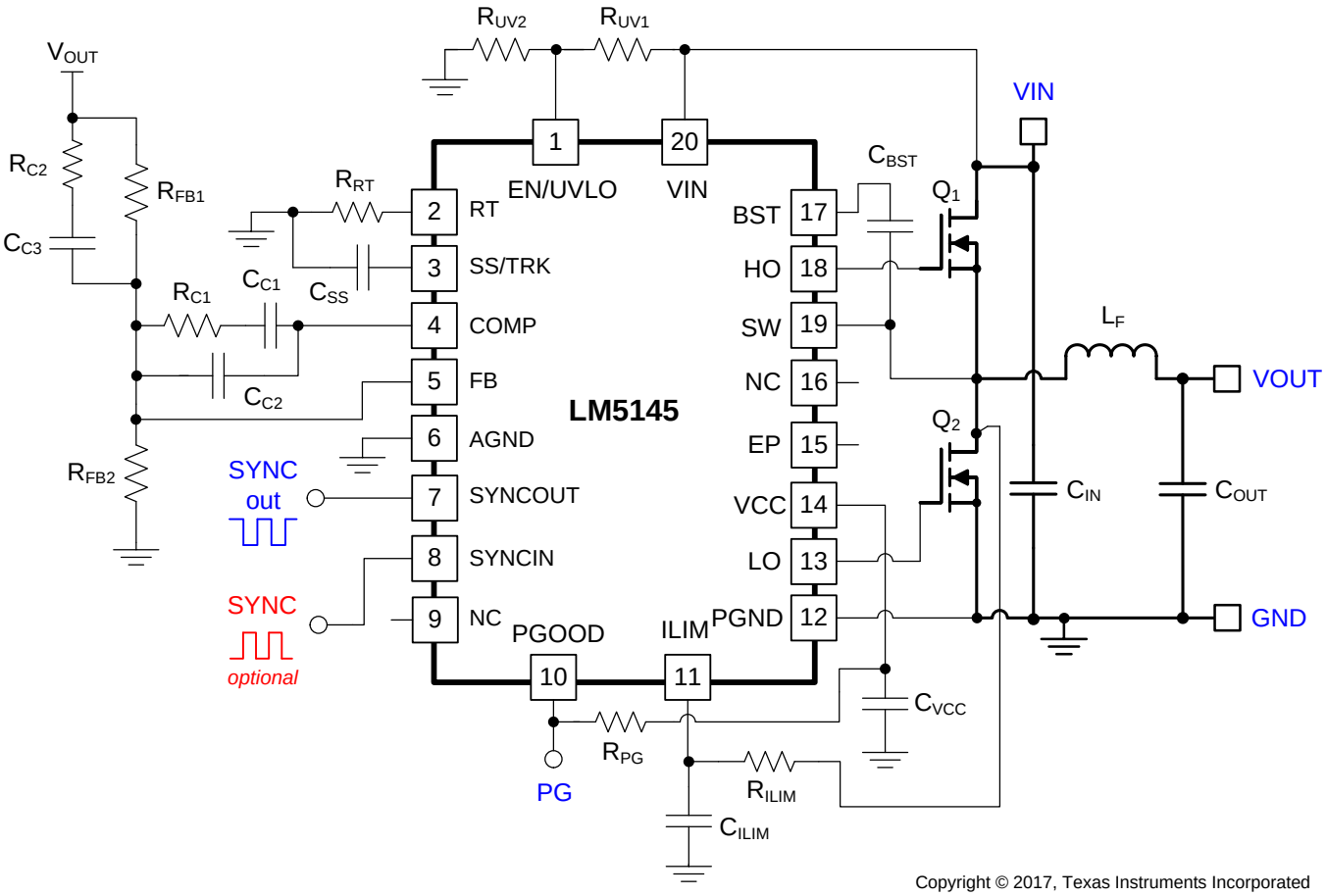

Figure 1. LM5145 Synchronous Buck Regulator Simplified Schematic

Copyright © 2017, Texas Instruments Incorporated

4 EVM Photo



Figure 2. LM5145 EVM Photo

CAUTION

Caution Hot surface.
Contact may cause burns.
Do not touch.

5 Test Setup and Procedure

5.1 Test Setup

Table 2. EVM Connections

LABEL	DESCRIPTION
VIN	Positive input voltage power and sense connection
GND	Negative input voltage and output voltage power and sense connection
VOUT	Positive output voltage positive power and sense connection
VCC	External bias supply connection (through a diode)
SYNCIN	Synchronization input
SYNCOUT	Synchronization output
PGOOD	Power Good output
TRIM	Trim input for output voltage adjust
SS/TRK	Tracking signal input
EN	ENABLE input – tie to GND to disable converter
AGND	Analog GND connection

Copyright © 2017, Texas Instruments Incorporated

Referencing the EVM connections described in Table 2, the recommended test setup to evaluate the LM5145EVM-HD-20A is shown in Figure 3. Working at an ESD-protected workstation, make sure that any wrist straps, boot straps, or mats are connected and referencing the user to earth ground before power is applied to the EVM.

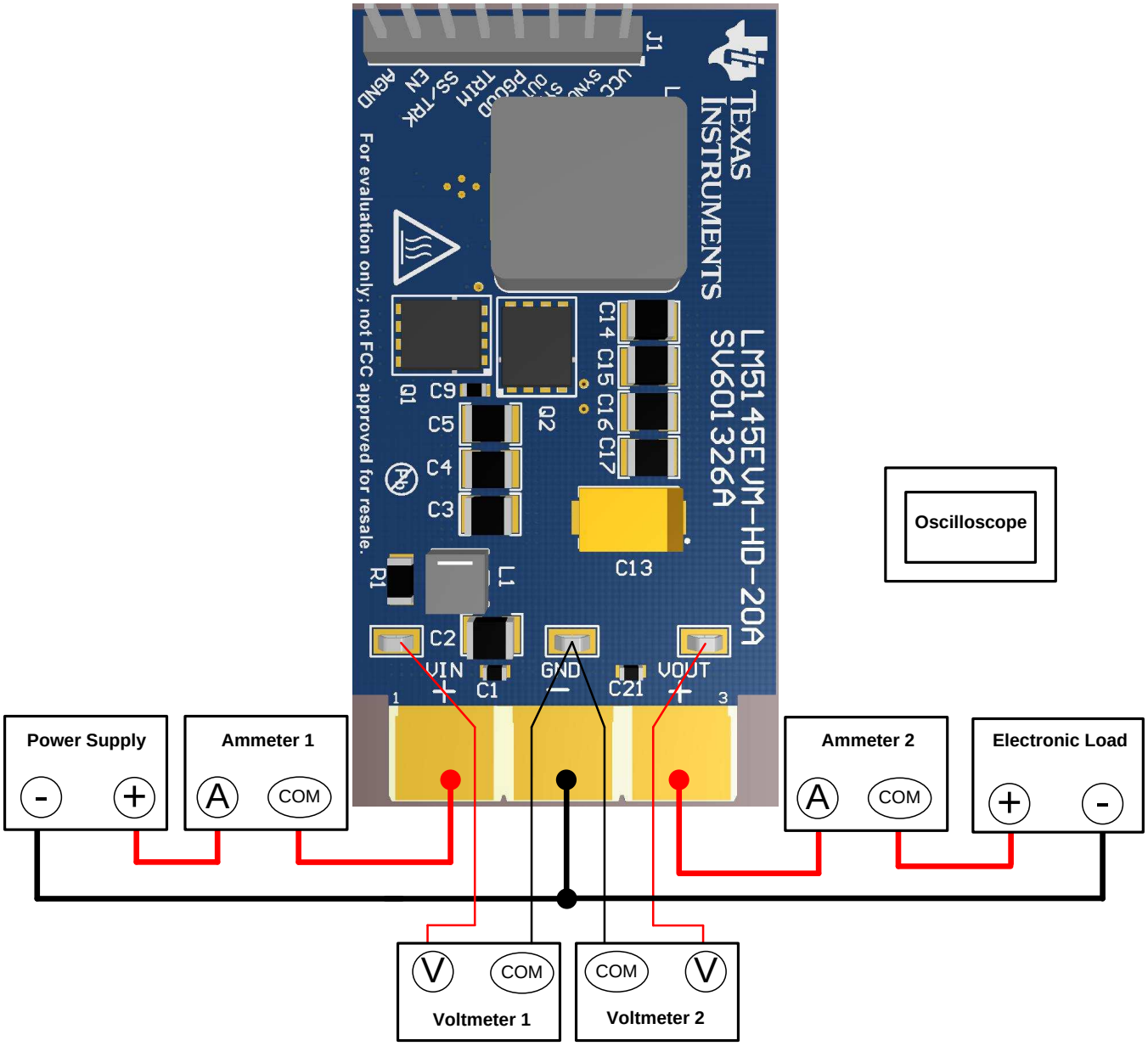

Figure 3. EVM Test Setup

CAUTION

Refer to the LM5145 datasheet, LM5145 Quickstart Calculator and WEBENCH® Power Designer for additional guidance pertaining to component selection and converter operation.

Copyright © 2017, Texas Instruments Incorporated

5.2 Test Equipment

Voltage Source: The input voltage source V_{IN} should be a 0–72-V variable DC source capable of supplying 10 A.

Multimeters:

- **Voltmeter 1:** Input voltage at VIN to GND. Set voltmeter to an input impedance of 100 MΩ.
- **Voltmeter 2:** Output voltage at VOUT to GND. Set voltmeter to an input impedance of 100 MΩ.
- **Ammeter 1:** Input current. Set ammeter to 1-second aperture time.
- **Ammeter 2:** Output current. Set ammeter to 1-second aperture time

Electronic Load: The load should be an electronic constant-resistance (CR) or constant-current (CC) mode load capable of 0 Adc to 20 Adc at 5 V. For a no-load input current measurement, disconnect the electronic load as it may draw a small residual current.

Oscilloscope: With the scope set to 20-MHz bandwidth and AC coupling, measure the output voltage ripple directly across an output capacitor with a short ground lead normally provided with the scope probe. Place the oscilloscope probe tip on the positive terminal of the output capacitor, holding the probe's ground barrel through the ground lead to the capacitor's negative terminal. TI does not recommend using a long-leaded ground connection because this may induce additional noise given a large ground loop. To measure other waveforms, adjust the oscilloscope as needed.

Safety: Always use caution when touching any circuits that may be live or energized.

5.3 Recommended Test Setup

5.3.1 Input Connections

- Prior to connecting the DC input source, set the current limit of the input supply to 0.1 A maximum. Ensure the input source is initially set to 0 V and connected to the VIN and GND connection points as shown in Figure 3. An additional input bulk capacitor is recommended to provide damping if long input lines are used.
- Connect voltmeter 1 at VIN and GND connection points to measure the input voltage.
- Connect ammeter 1 to measure the input current and set to at least 1-second aperture time.

5.3.2 Output Connections

- Connect an electronic load to VOUT and GND connections. Set the load to constant-resistance mode or constant-current mode at 0 A before applying input voltage.
- Connect voltmeter 2 at VOUT and GND connection points to measure the output voltage.
- Connect ammeter 2 to measure the output current.

5.4 Test Procedure

5.4.1 Line and Load Regulation, Efficiency

- Set up the EVM as described above.
- Set load to constant resistance or constant current mode and to sink 0 A.
- Increase input source from 0 V to 48 V; use voltmeter 1 to measure the input voltage.
- Increase the current limit of the input supply to 10A.
- Using voltmeter 2 to measure the output voltage, V_{OUT}, vary the load current from 0 to 20 A DC; V_{OUT} should remain within the load regulation specification.
- Set the load current to 10 A (50% rated load) and vary the input source voltage from 24 V to 72 V; V_{OUT} should remain within the line regulation specification.
- Decrease load to 0 A. Decrease input source voltage to 0 V.

Copyright © 2017, Texas Instruments Incorporated

6 Test Data and Performance Curves

Figure 4 through Figure 13 present typical performance curves for the LM5145EVM-HD-20A. Because actual performance data may be affected by measurement techniques and environmental variables, these curves are presented for reference and may differ from actual field measurements.

6.1 Conversion Efficiency

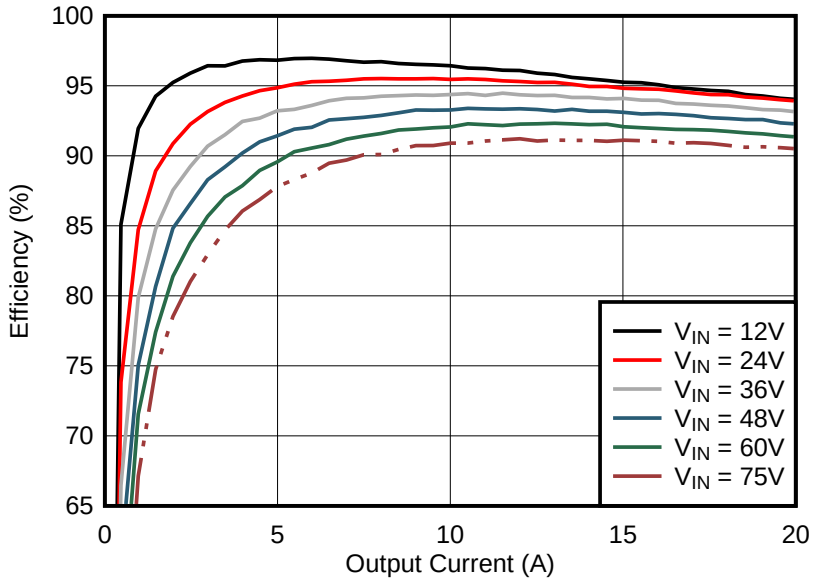

Figure 4. Conversion Efficiency, FPWM Mode (SYNCIN Tied High)

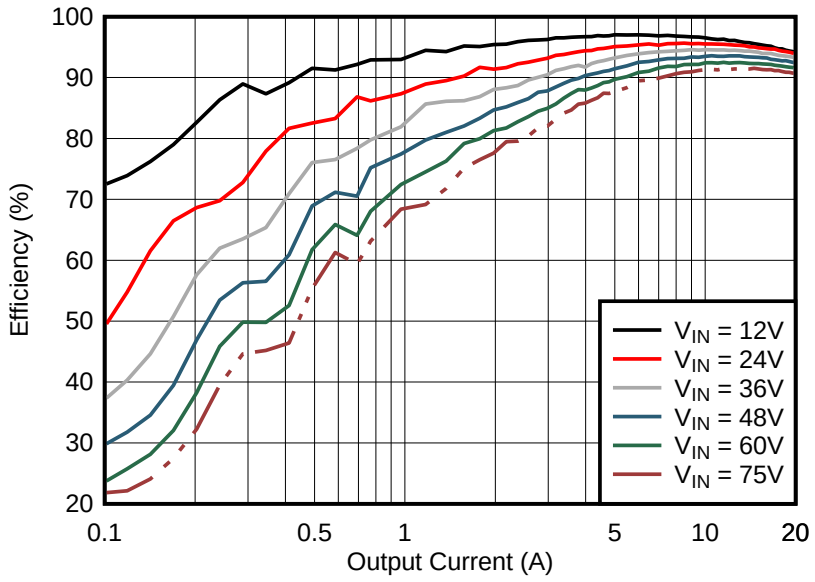

Figure 5. Conversion Efficiency, Diode Emulation Mode Enabled (SYNCIN Tied Low)

Copyright © 2017, Texas Instruments Incorporated

6.2 Operating Waveforms

6.2.1 Switching

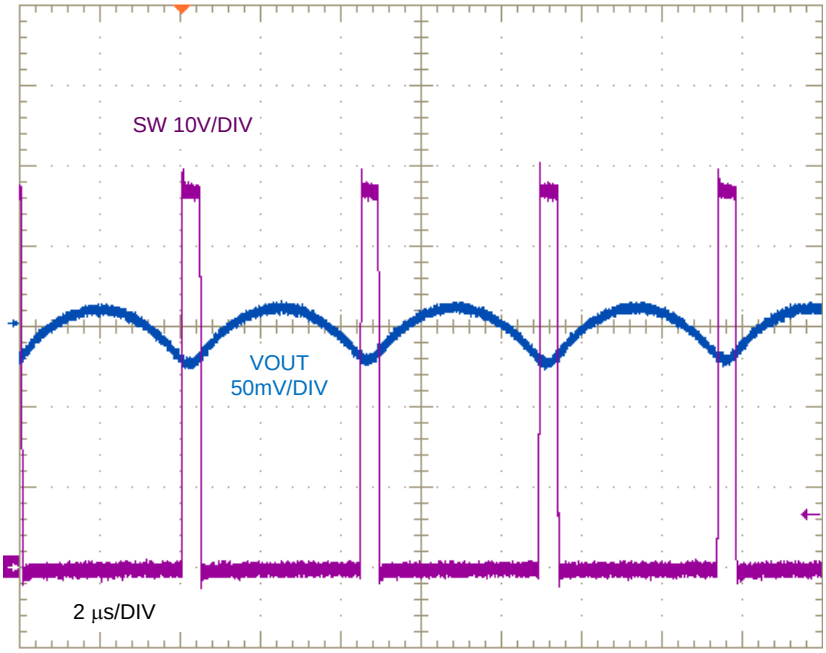

Figure 6. SW Node Voltage and Output Ripple, I_{OUT} = 20 A, V_{IN} = 48 V

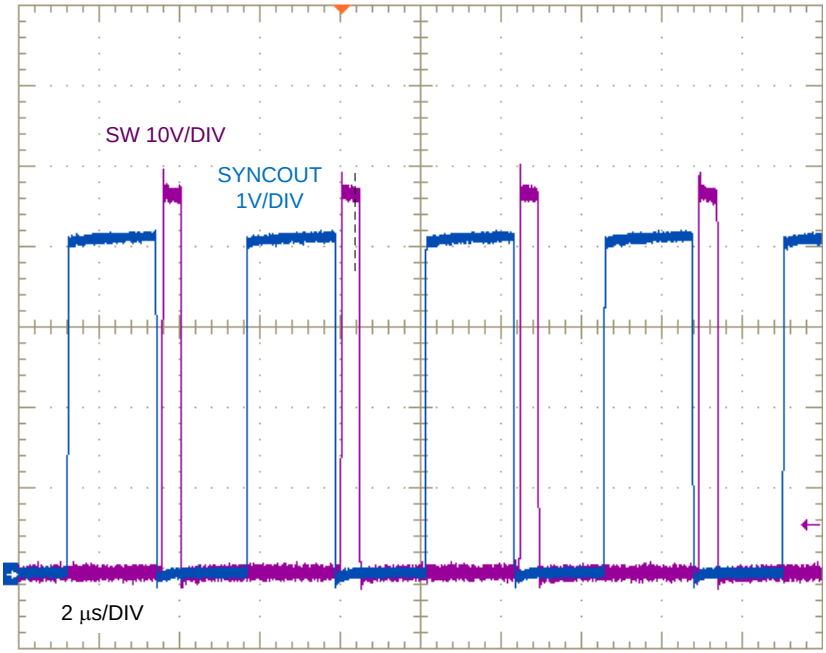

Figure 7. SW Node and SYNCOUT Voltages, V_{IN} = 48 V

Copyright © 2017, Texas Instruments Incorporated

6.2.2 Load Transient Response

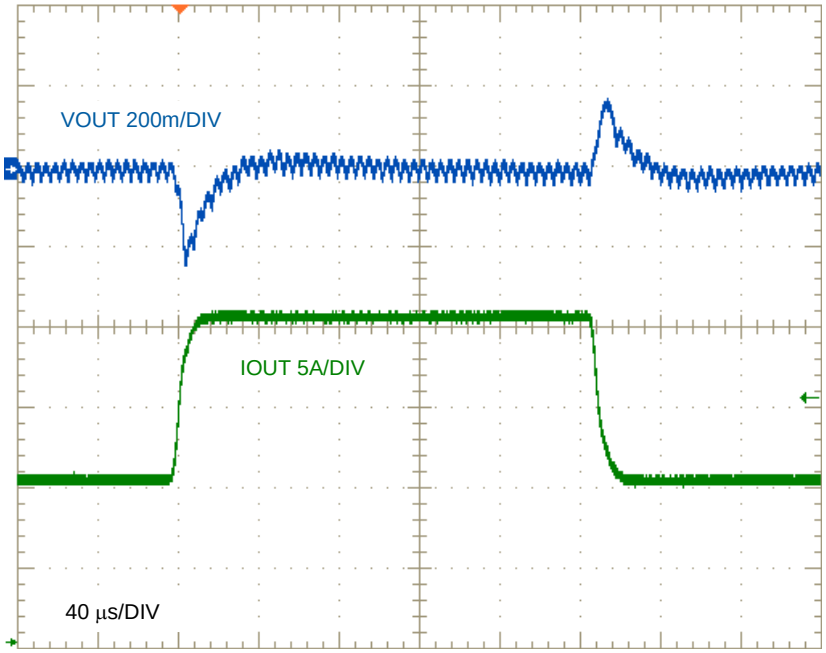

Figure 8. Load Transient Response, V_{IN} = 48 V, FPWM, 10 A to 20 A at 1 A/µs

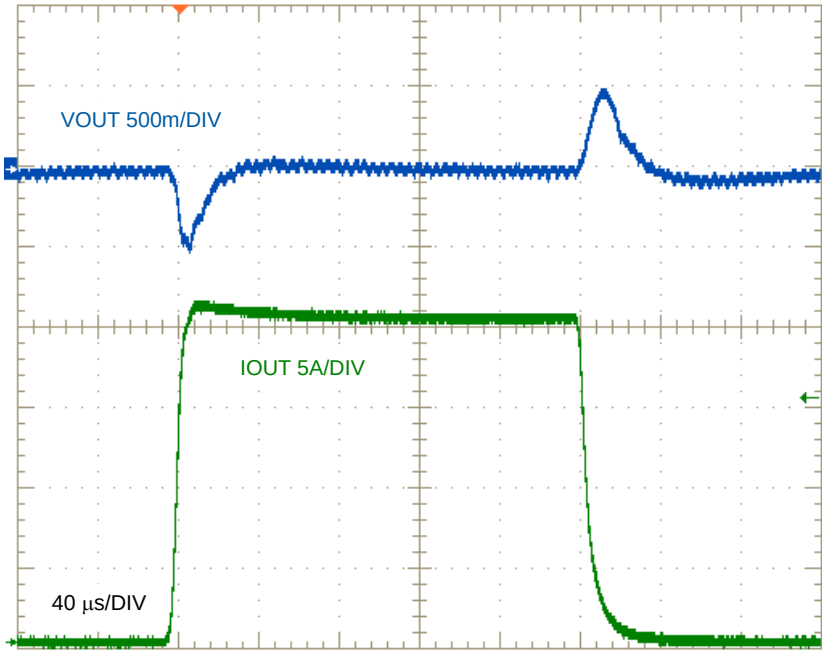

Figure 9. Load Transient Response, V_{IN} = 48 V, FPWM, 0 A to 20 A at 1 A/µs

Copyright © 2017, Texas Instruments Incorporated

6.2.3 Line Transient Response

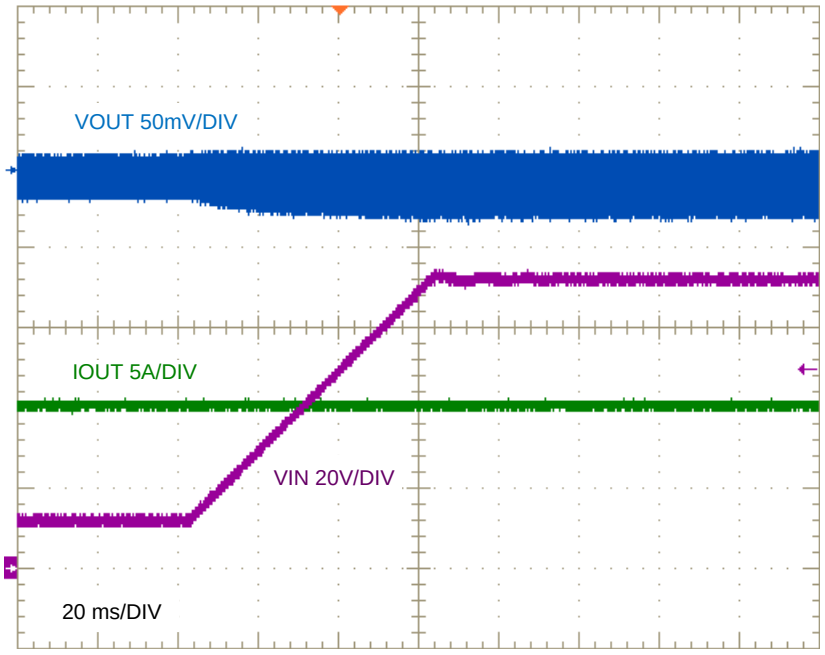

Figure 10. Input Voltage Rising Transient from 12 V to 72 V, I_{OUT} = 10 A (ENABLE Terminal Tied High)

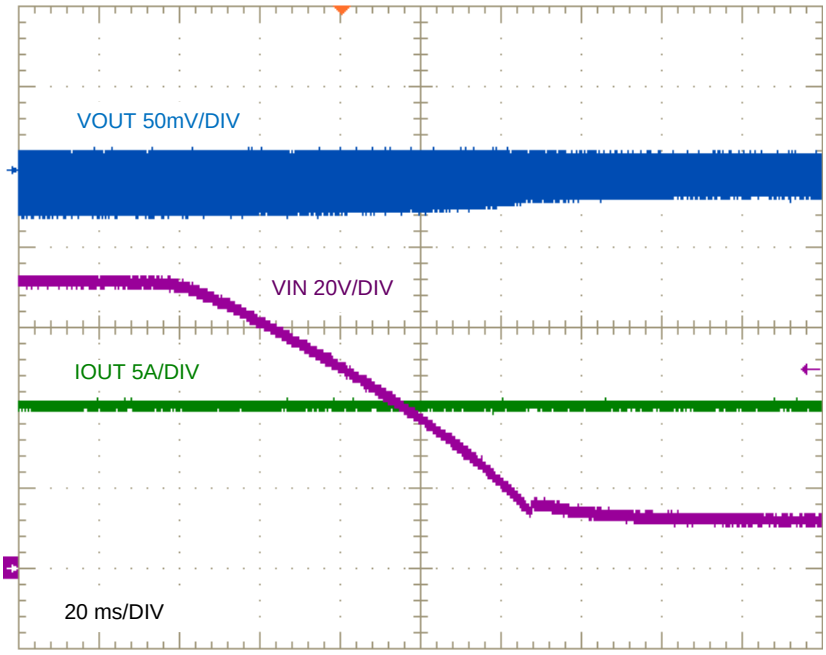

Figure 11. Input Voltage Falling Transient From 72 V to 12 V, I_{OUT} = 10 A (ENABLE Terminal Tied High)

Copyright © 2017, Texas Instruments Incorporated

6.2.4 ENABLE ON and OFF

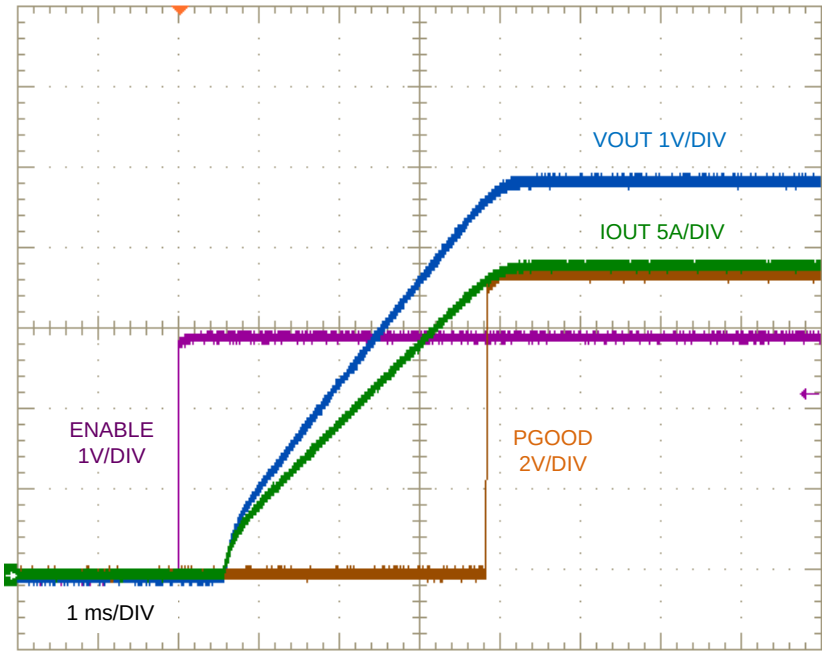

Figure 12. ENABLE ON, V_{IN} = 48 V, I_{OUT} = 20 A Resistive

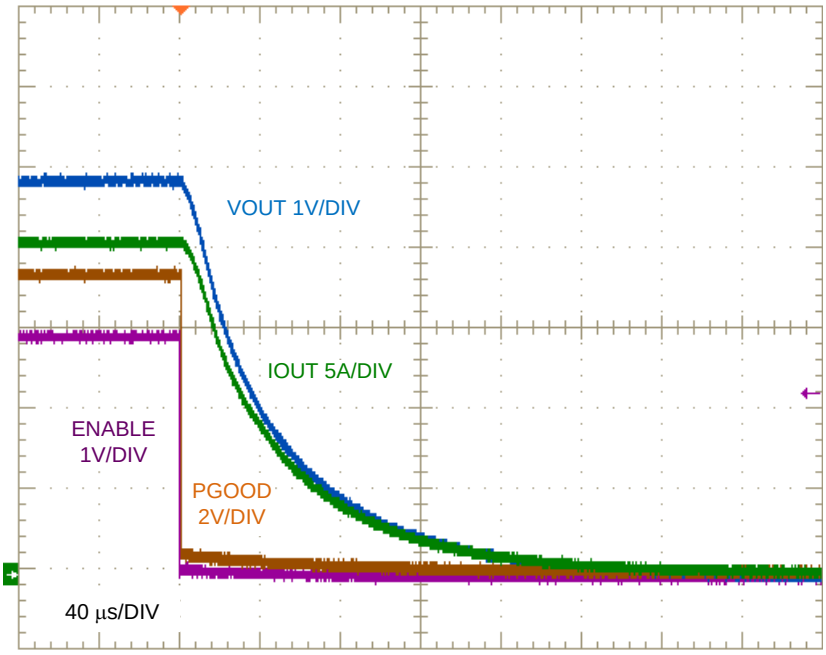

Figure 13. ENABLE OFF, V_{IN} = 48 V, I_{OUT} = 20 A Resistive

Copyright © 2017, Texas Instruments Incorporated

6.2.5 Start-Up

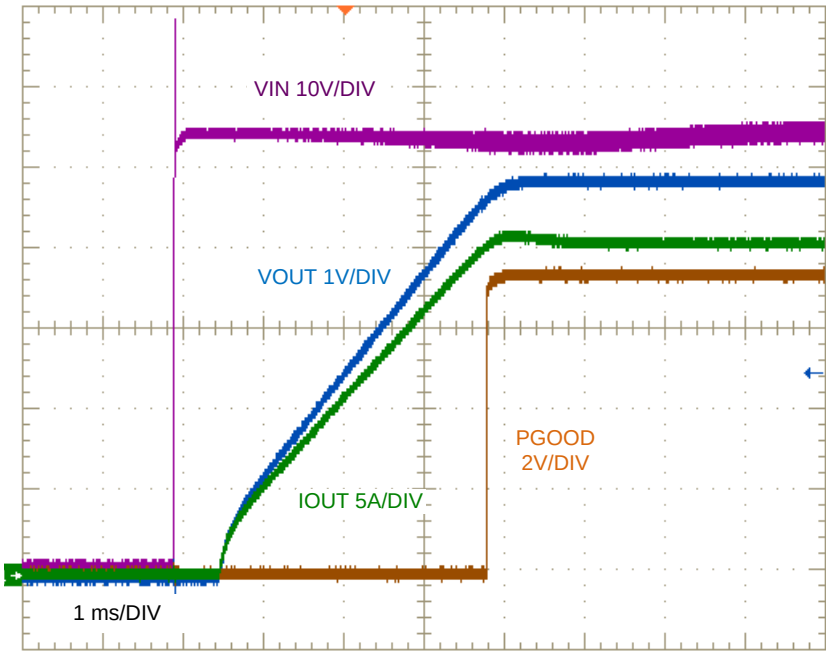

Figure 14. Start-Up, V_{IN} = 48 V, I_{OUT} = 20 A Resistive

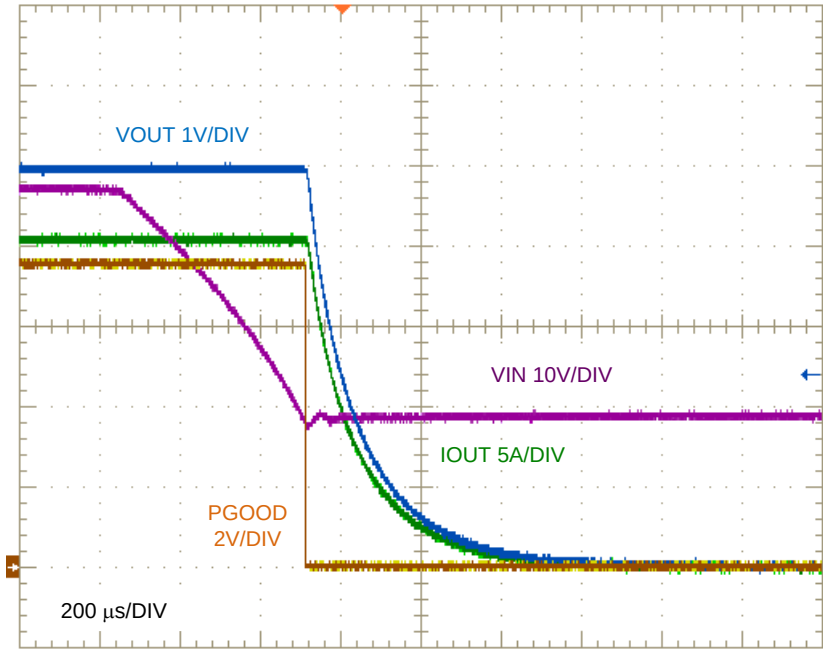

Figure 15. Shutdown, V_{IN} = 48 V, I_{OUT} = 20 A Resistive

Copyright © 2017, Texas Instruments Incorporated

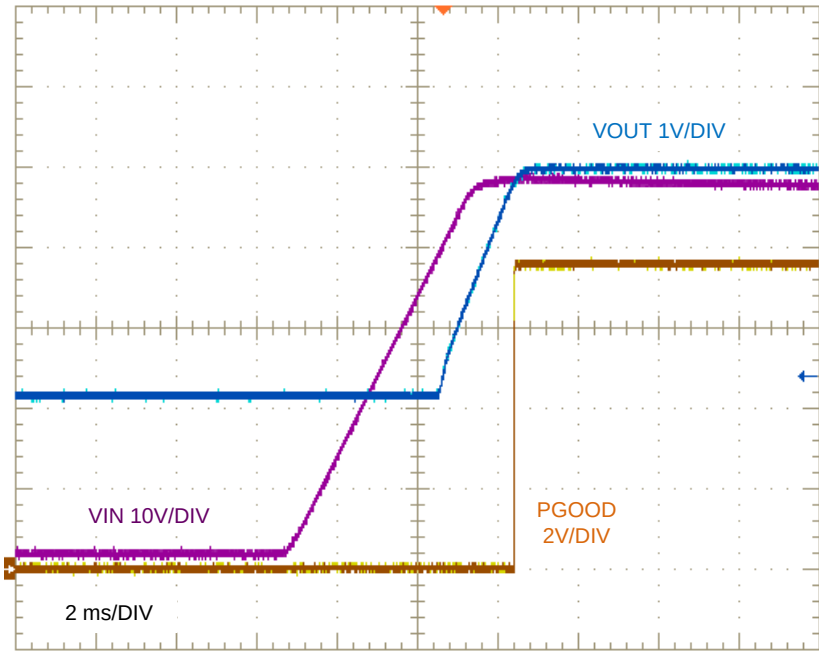

Figure 16. Pre-Biased Start-up, V_{IN} = 48 V, I_{OUT} = 0 A

Copyright © 2017, Texas Instruments Incorporated

6.3 Thermal Performance

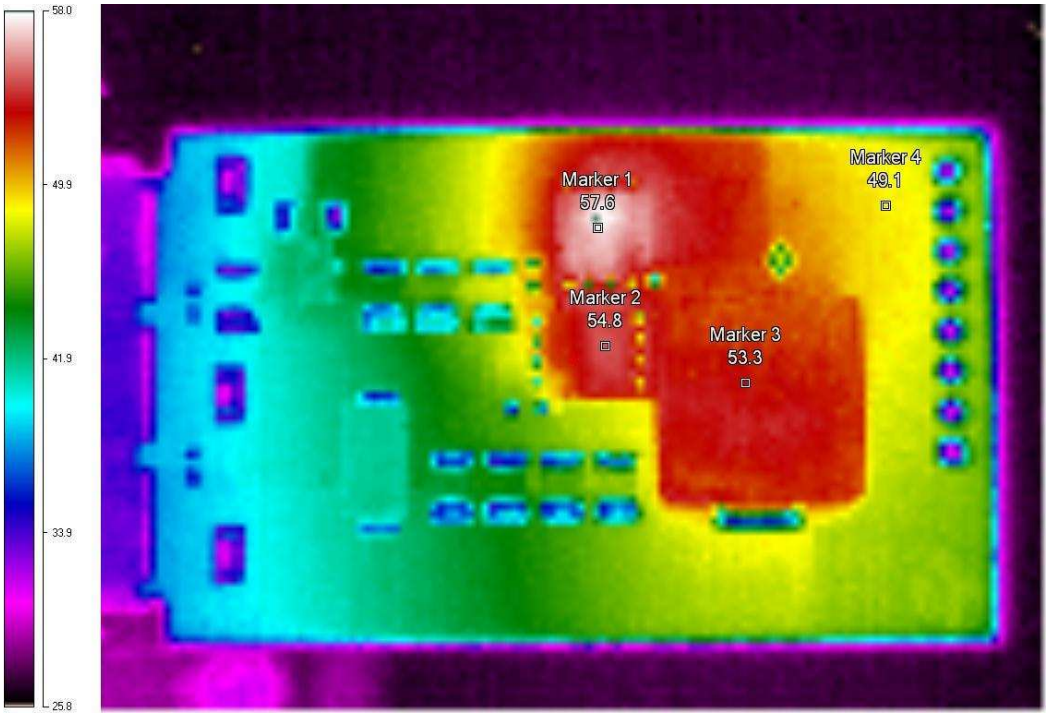

Figure 17. Thermal Performance at V_{IN} = 48 V, I_{OUT} = 10 A, 200 LFM Airflow

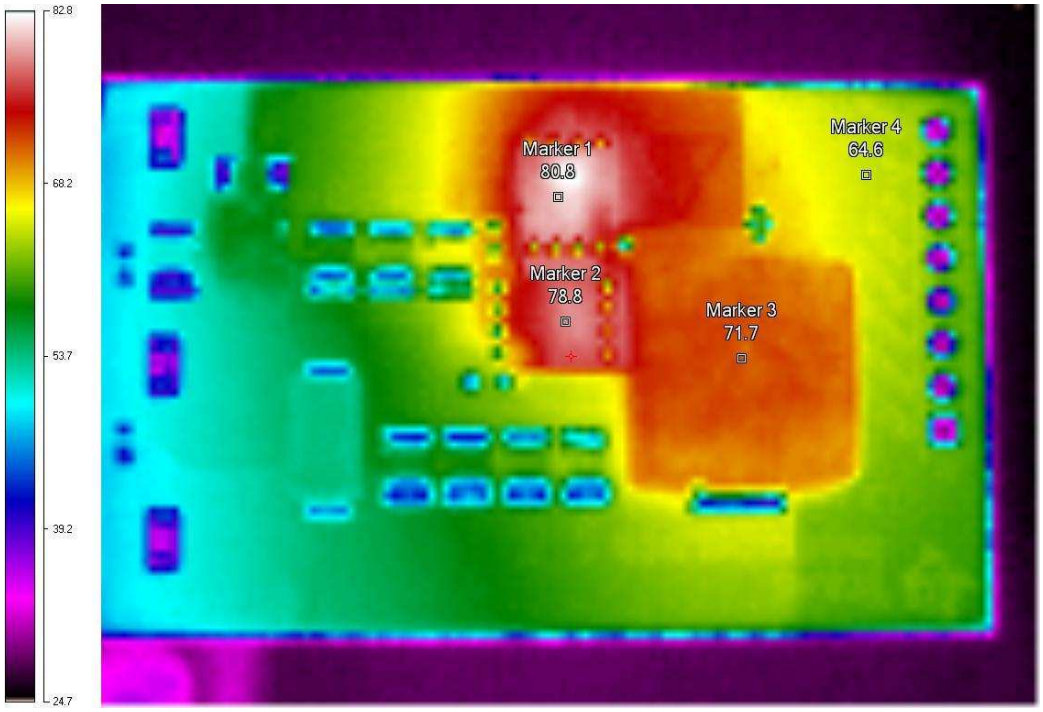

Figure 18. Thermal Performance at V_{IN} = 48 V, I_{OUT} = 15 A, 200 LFM Airflow

Copyright © 2017, Texas Instruments Incorporated

7 EVM Documentation

7.1 Schematic

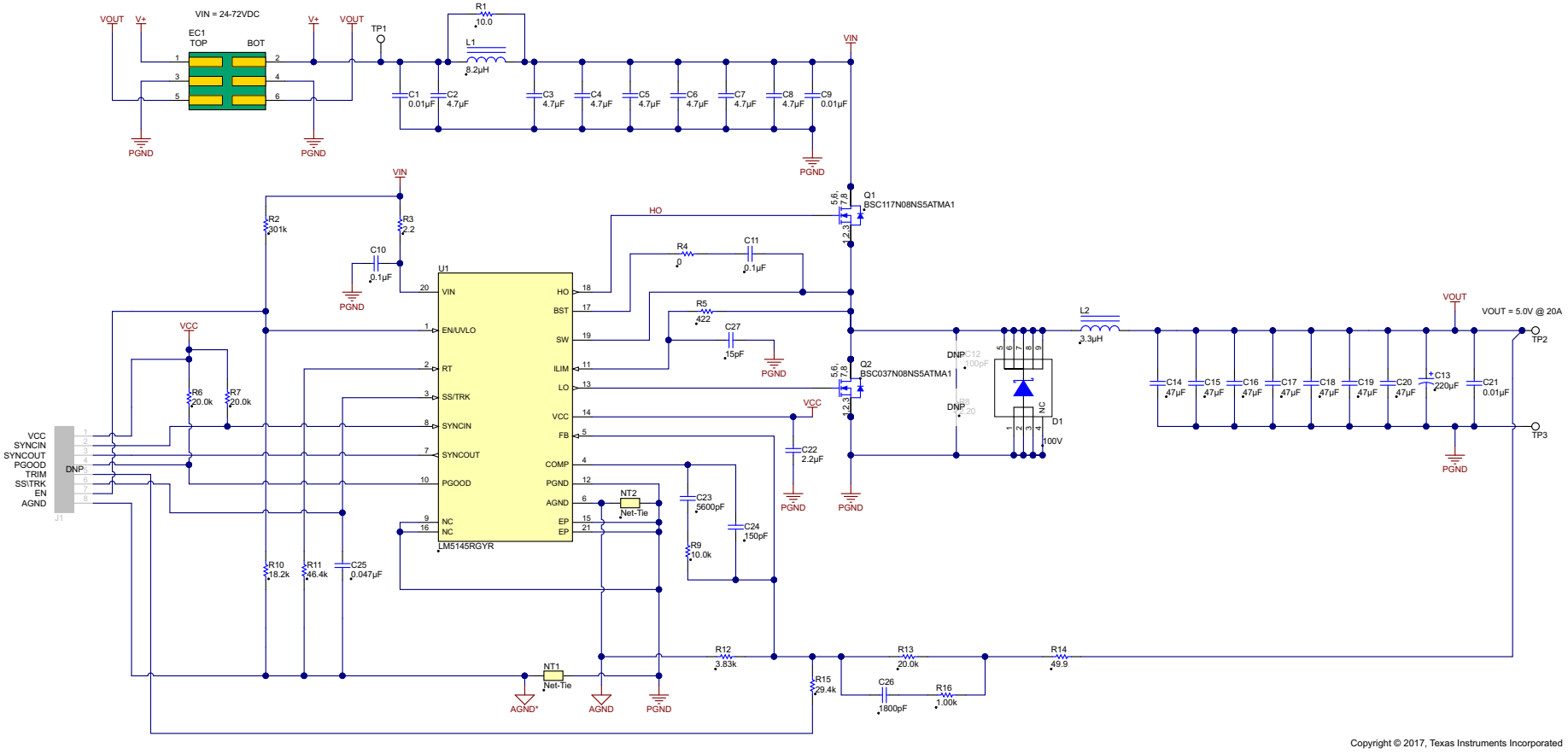

Figure 19. EVM Schematic

Copyright © 2017, Texas Instruments Incorporated

7.2 Bill of Materials

Table 3. Bill of Materials

COUNT	REF DES	DESCRIPTION	PART NUMBER	MFR
3	C1, C9, C21	Capacitor, Ceramic, 10nF, 100V, X7R, 0603	Std	Std
7	C2, C3, C4, C5, C6, C7, C8	Capacitor, Ceramic, 4.7µF, 100V, X7S, 1210	C3225X7S2A475M200AB	TDK
			GRJ32DC72A475KE11L	Murata
1	C10	Capacitor, Ceramic, 0.1µF, 100V, X7R, 0603	C1608X7R1A105K080AC	TDK
1	C11	Capacitor, Ceramic, 0.1µF, 25V, X7R, 0603	Std	Std
1	C13	Capacitor, Polymer Aluminum, 220µF, 6.3V, 7343, 10mΩ ESR	ECASD60J227M010K00	Murata
		Capacitor, Tant Polymer, 220µF, 10V, 7343, 18mΩ ESR	10TCE220MIL	Panasonic
7	C14, C15, C16, C17, C18, C19, C20	Capacitor, Ceramic, 47µF, 10V, X7R, 1210	GRM32ER71A476KE15L	Murata
			LMK325B7476MM-TR	Taiyo Yuden
			1210ZC476KAT2A	AVX
1	C22	Capacitor, Ceramic, 2.2µF, 16V, X7R, 0603	EMK107BB7225MA-T	Taiyo Yuden
		Capacitor, Ceramic, 2.2µF, 16V, X7S, 0603	GRM188C71C225KE11D	Murata
1	C23	Capacitor, Ceramic, 5.6nF, 16V, X7R, 10%, 0603	Std	Std
1	C24	Capacitor, Ceramic, 150pF, 16V, X7R, 10%, 0603	Std	Std
1	C25	Capacitor, Ceramic, 47nF, 16V, X7R, 10%, 0603	Std	Std
1	C26	Capacitor, Ceramic, 1.8nF, 16V, X7R, 10%, 0603	Std	Std
1	C27	Capacitor, Ceramic, 15pF, 100V, X7R, 10%, 0603	Std	Std
1	D1	Schottky Diode, 100V, 6A	ST	STPS6M100
1	L1	Inductor, 8.2µH ±20%, 60mΩ max, 3.4A Isat, 4mm max	XAL4040-822MEC	Coilcraft
1	L2	Inductor, 3.3µH ±20%, 3.75mΩ typ, 42A, 6.5mm max	CMLS136E-3R3MS	Cyntec
		Inductor, 3.3µH, 5.7mΩ typ, 32 A, 6.5mm max	744373965033	Würth Electronik
		Inductor, 3.0µH, 5.86mΩ typ, 37 A, 5mm max	XAL1350-302MED	Coilcraft
1	Q1	MOSFET, N-Channel, 80V, 12mΩ	BSC117N08NS5	Infineon
1	Q2	MOSFET, N-Channel, 80V, 4mΩ	BSC037N08NS5	Infineon
1	R1	Resistor, Chip, 10Ω, 1/8W, 5%, 1206	Std	Std
1	R2	Resistor, Chip, 301kΩ, 1/16W, 1%, 0805	Std	Std
1	R3	Resistor, Chip, 2.2Ω, 1/16W, 1%, 0603	Std	Std
1	R4	Resistor, Chip, 0Ω, 1/16W, 1%, 0603	Std	Std
1	R5	Resistor, Chip, 422Ω, 1/16W, 1%, 0603	Std	Std
3	R6, R7, R13	Resistor, Chip, 20kΩ, 1/16W, 1%, 0603	Std	Std
1	R9	Resistor, Chip, 10kΩ, 1/16W, 1%, 0603	Std	Std
1	R10	Resistor, Chip, 18.2kΩ, 1/16W, 1%, 0603	Std	Std
1	R11	Resistor, Chip, 46.4kΩ, 1/16W, 1%, 0603	Std	Std
1	R12	Resistor, Chip, 3.83kΩ, 1/16W, 1%, 0603	Std	Std
1	R14	Resistor, Chip, 49.9Ω, 1/16W, 1%, 0603	Std	Std
1	R15	Resistor, Chip, 29.4kΩ, 1/16W, 1%, 0603	Std	Std
1	R16	Resistor, Chip, 1kΩ, 1/16W, 1%, 0603	Std	Std
1	U1	IC, LM5145, Wide V_{IN} Synchronous Buck Controller, VQFN-20	LM5145RGYR	TI
1	PCB1	PCB, FR4, 4 layer, 2 oz, 50 mm x 30 mm	PCB	–
0	J1	Connector, SMT for VCC, SYNCIN, SYNCOUT, PGOOD, TRIM, SS/TRK, EN, AGND	PEC08SAAN	Sullins
0	J2	Connector for VIN, VOUT, GND	6651712-1	TE Connectivity
			1766685-1	

Copyright © 2017, Texas Instruments Incorporated

7.3 PCB Layout

Figure 20 through Figure 25 show the design of the LM5145 4-layer PCB with 2-oz copper thickness. The EVM is a two-sided design with plated edge terminals for VIN, VOUT and GND connections.

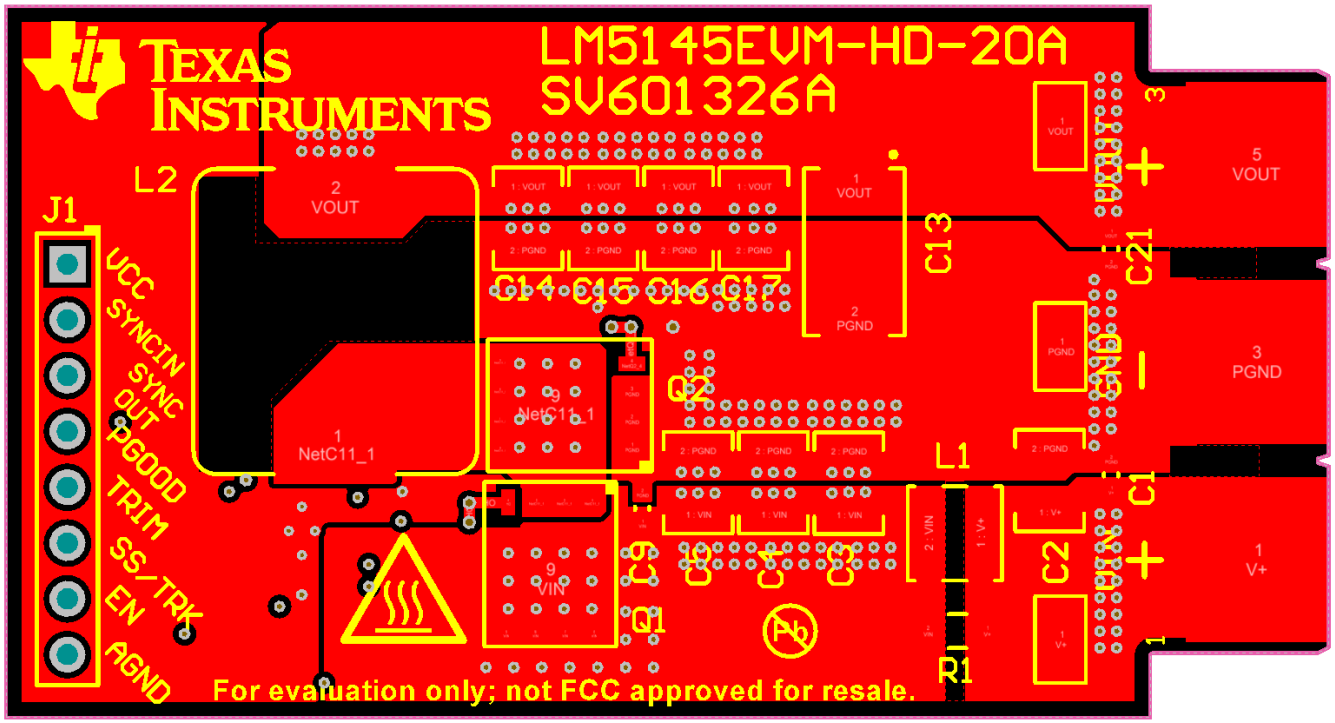

Figure 20. Top Copper (Top View)

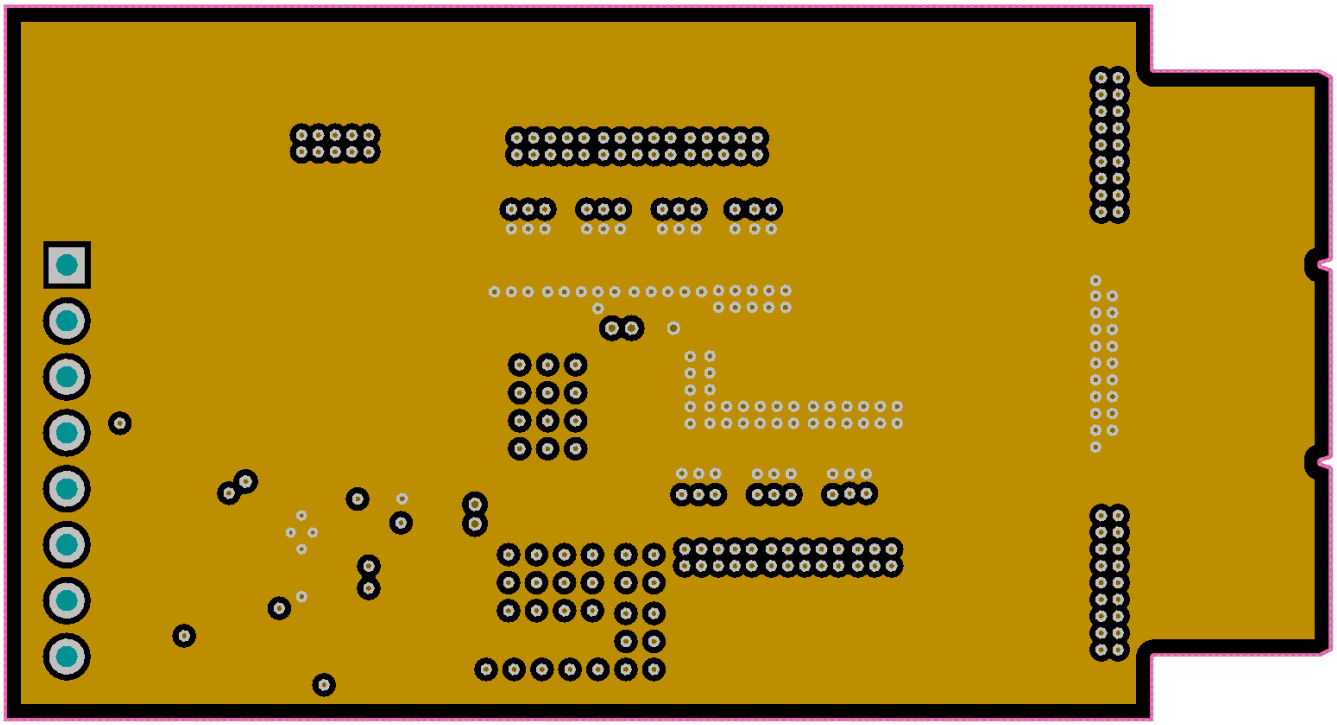

Figure 21. Layer 2 Copper (Top View)

Copyright © 2017, Texas Instruments Incorporated

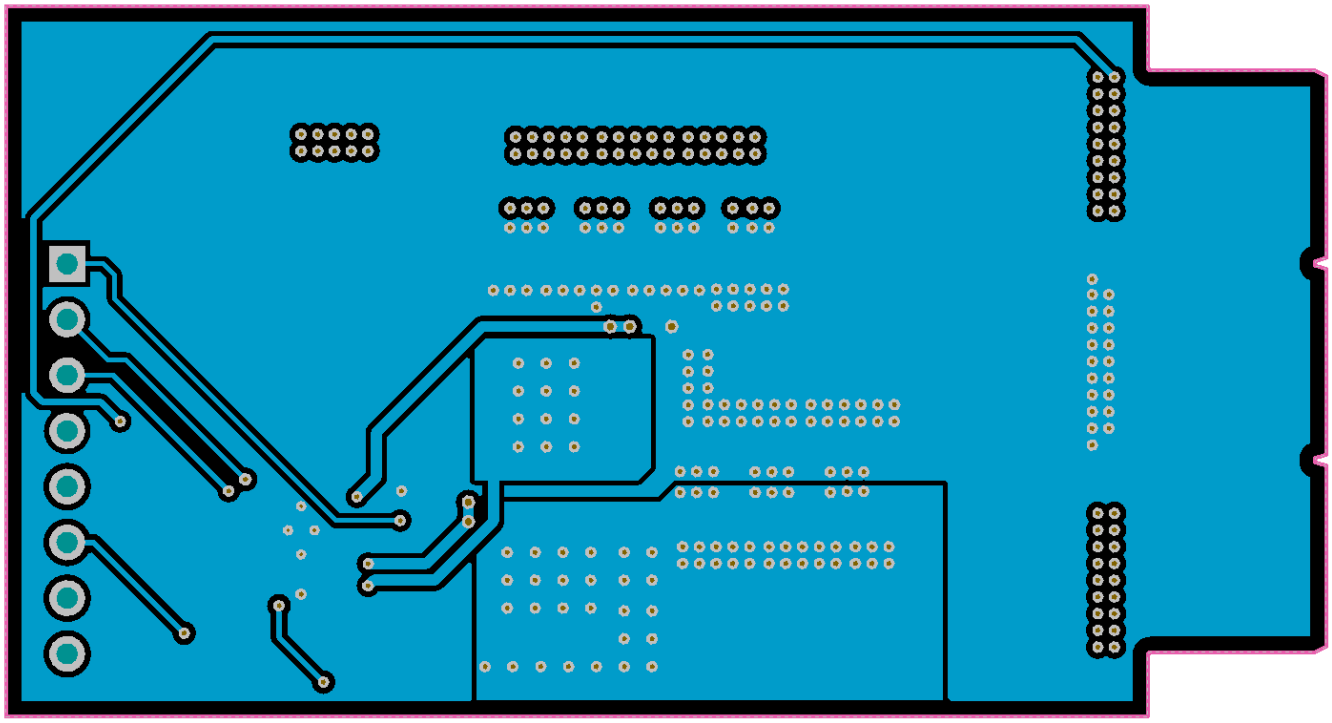

Figure 22. Layer 3 Copper (Top View)

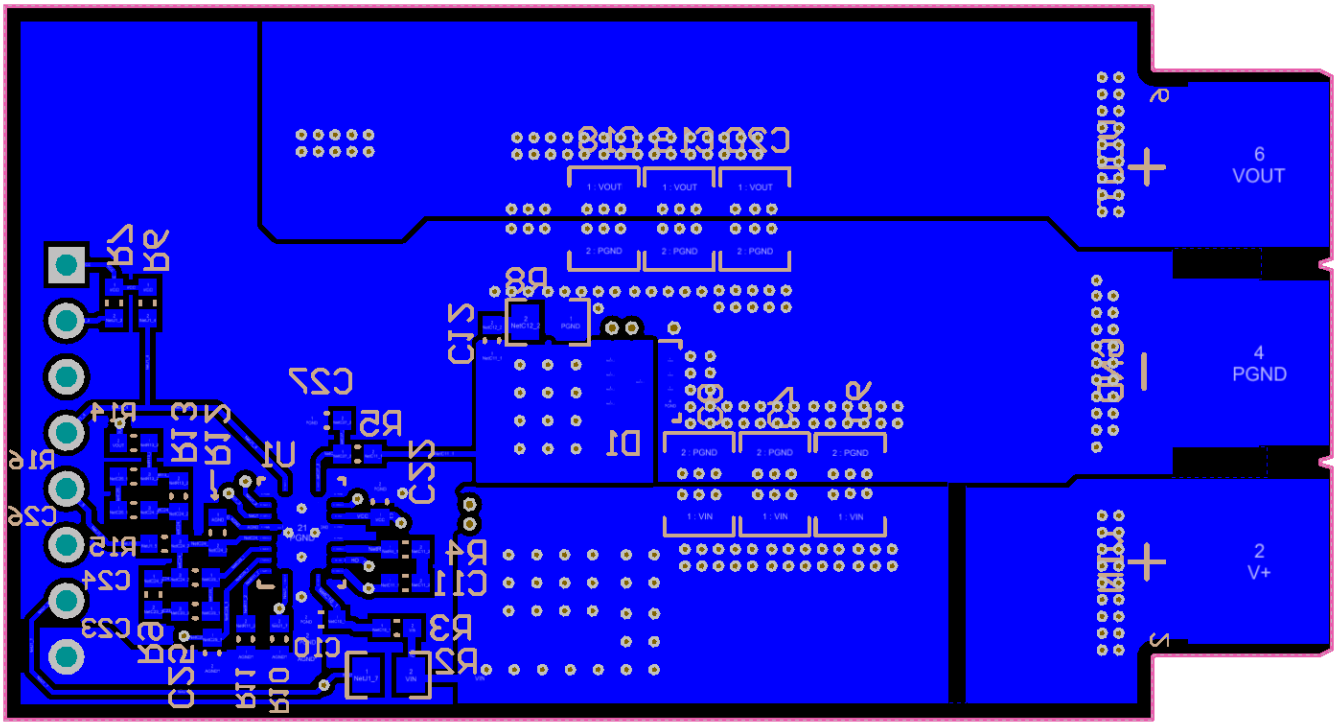

Figure 23. Bottom Copper (Top View)

Copyright © 2017, Texas Instruments Incorporated

7.4 Assembly Drawings

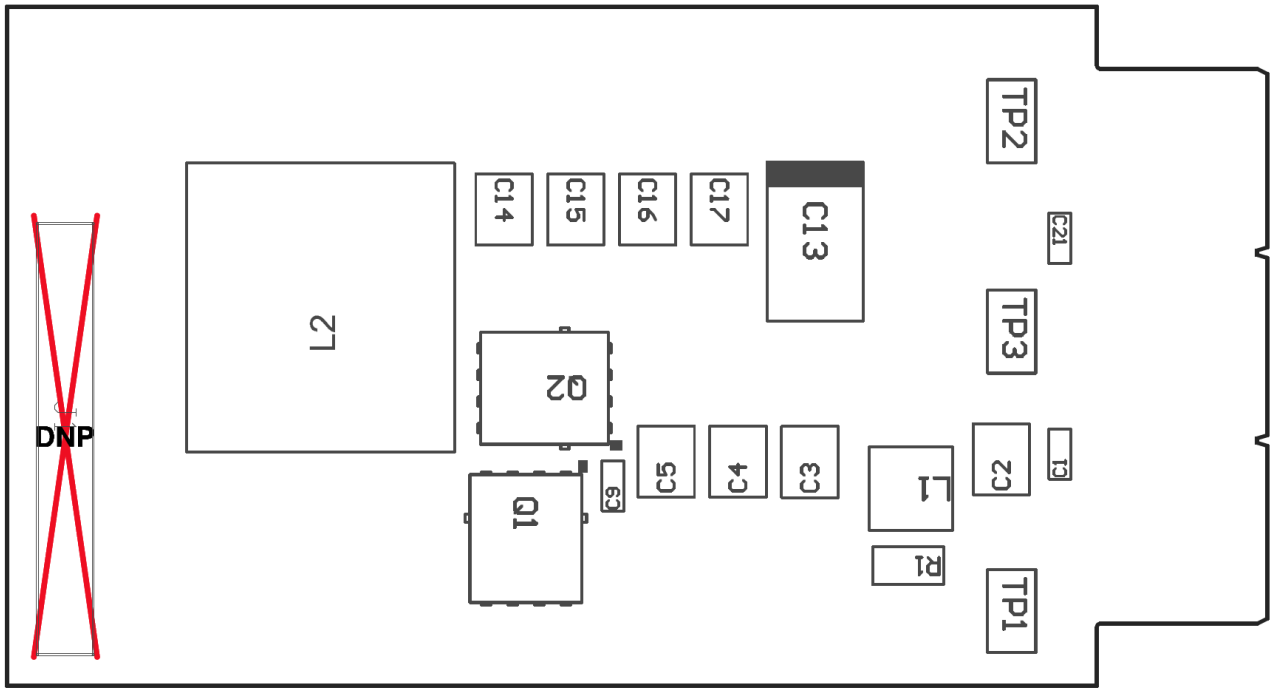

Figure 24. Top Assembly

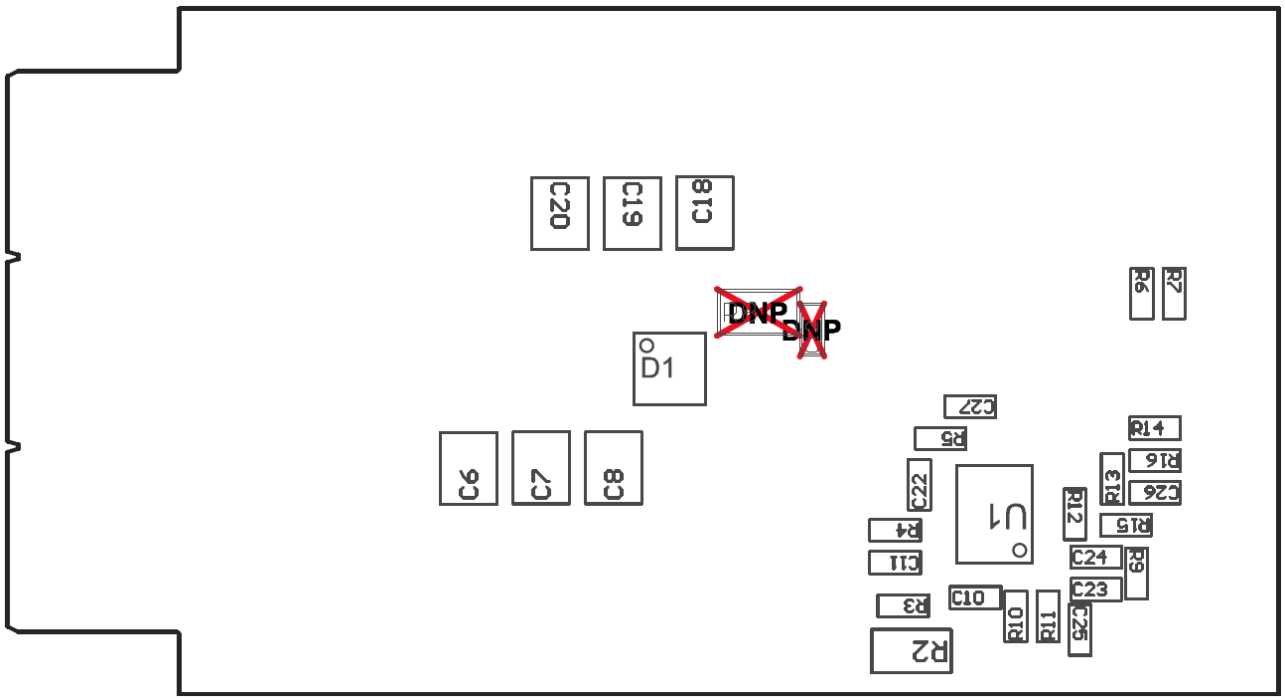

Figure 25. Bottom Assembly

Copyright © 2017, Texas Instruments Incorporated

8 Device and Documentation Support

8.1 Device Support

8.1.1 Third-Party Products Disclaimer

TI'S PUBLICATION OF INFORMATION REGARDING THIRD-PARTY PRODUCTS OR SERVICES DOES NOT CONSTITUTE AN ENDORSEMENT REGARDING THE SUITABILITY OF SUCH PRODUCTS OR SERVICES OR A WARRANTY, REPRESENTATION OR ENDORSEMENT OF SUCH PRODUCTS OR SERVICES, EITHER ALONE OR IN COMBINATION WITH ANY TI PRODUCT OR SERVICE.

8.1.2 Development Support

For development support see the following:

- For TI's reference design library, visit TI Designs
- For TI's WEBENCH Design Environments, visit the WEBENCH® Design Center
- LM5145 DC-DC Controller Quickstart Calculator and PSPICE simulation model

8.2 Documentation Support

8.2.1 Related Documentation

For related documentation see the following:

- *AN-1713 LM5116 Evaluation Board* (SNVA285)
- *Reduce Buck Converter EMI and Voltage Stress by Minimizing Inductive Parasitics* (SLYT682)
- *AN-2162 Simple Success with Conducted EMI from DC-DC Converters* (SNVA489)
- White Papers:
  - *Valuing Wide VIN, Low EMI Synchronous Buck Circuits for Cost-driven, Demanding Applications* (SLYY104)

8.2.1.1 PCB Layout Resources

- *AN-1149 Layout Guidelines for Switching Power Supplies* (SNVA021)
- *AN-1229 Simple Switcher PCB Layout Guidelines* (SNVA054)
- *Constructing Your Power Supply – Layout Considerations* (SLUP230)
- *Low Radiated EMI Layout Made SIMPLE with LM4360x and LM4600x* (SNVA721)
- Power House Blogs:
  - *High-Density PCB Layout of DC-DC Converters*

8.2.1.2 Thermal Design Resources

- *AN-2020 Thermal Design by Insight, Not Hindsight* (SNVA419)
- *AN-1520 A Guide to Board Layout for Best Thermal Resistance for Exposed Pad Packages* (SNVA183)
- *Semiconductor and IC Package Thermal Metrics* (SPRA953)
- *Thermal Design Made Simple with LM43603 and LM43602* (SNVA719)
- *PowerPAD Thermally Enhanced Package* (SLMA002)
- *PowerPAD Made Easy* (SLMA004)
- *Using New Thermal Metrics* (SBVA025)

Copyright © 2017, Texas Instruments Incorporated

Revision History

NOTE: Page numbers for previous revisions may differ from page numbers in the current version.

Changes from Original (May 2017) to A Revision	Page
• Added high temp logo, thermal performance plots, and new EVM photo	1

Copyright © 2017, Texas Instruments Incorporated

STANDARD TERMS FOR EVALUATION MODULES

1. *Delivery:* TI delivers TI evaluation boards, kits, or modules, including any accompanying demonstration software, components, and/or documentation which may be provided together or separately (collectively, an “EVM” or “EVMs”) to the User (“User”) in accordance with the terms set forth herein. User's acceptance of the EVM is expressly subject to the following terms.

   1.1 EVMs are intended solely for product or software developers for use in a research and development setting to facilitate feasibility evaluation, experimentation, or scientific analysis of TI semiconductors products. EVMs have no direct function and are not finished products. EVMs shall not be directly or indirectly assembled as a part or subassembly in any finished product. For clarification, any software or software tools provided with the EVM (“Software”) shall not be subject to the terms and conditions set forth herein but rather shall be subject to the applicable terms that accompany such Software

   1.2 EVMs are not intended for consumer or household use. EVMs may not be sold, sublicensed, leased, rented, loaned, assigned, or otherwise distributed for commercial purposes by Users, in whole or in part, or used in any finished product or production system.

2 *Limited Warranty and Related Remedies/Disclaimers*:

   2.1 These terms do not apply to Software. The warranty, if any, for Software is covered in the applicable Software License Agreement.

   2.2 TI warrants that the TI EVM will conform to TI's published specifications for ninety (90) days after the date TI delivers such EVM to User. Notwithstanding the foregoing, TI shall not be liable for a nonconforming EVM if (a) the nonconformity was caused by neglect, misuse or mistreatment by an entity other than TI, including improper installation or testing, or for any EVMs that have been altered or modified in any way by an entity other than TI, (b) the nonconformity resulted from User's design, specifications or instructions for such EVMs or improper system design, or (c) User has not paid on time. Testing and other quality control techniques are used to the extent TI deems necessary. TI does not test all parameters of each EVM. User's claims against TI under this Section 2 are void if User fails to notify TI of any apparent defects in the EVMs within ten (10) business days after delivery, or of any hidden defects with ten (10) business days after the defect has been detected.

   2.3 TI's sole liability shall be at its option to repair or replace EVMs that fail to conform to the warranty set forth above, or credit User's account for such EVM. TI's liability under this warranty shall be limited to EVMs that are returned during the warranty period to the address designated by TI and that are determined by TI not to conform to such warranty. If TI elects to repair or replace such EVM, TI shall have a reasonable time to repair such EVM or provide replacements. Repaired EVMs shall be warranted for the remainder of the original warranty period. Replaced EVMs shall be warranted for a new full ninety (90) day warranty period.

3 *Regulatory Notices:*

   3.1 *United States*

      3.1.1 *Notice applicable to EVMs not FCC-Approved:*

      FCC NOTICE: This kit is designed to allow product developers to evaluate electronic components, circuitry, or software associated with the kit to determine whether to incorporate such items in a finished product and software developers to write software applications for use with the end product. This kit is not a finished product and when assembled may not be resold or otherwise marketed unless all required FCC equipment authorizations are first obtained. Operation is subject to the condition that this product not cause harmful interference to licensed radio stations and that this product accept harmful interference. Unless the assembled kit is designed to operate under part 15, part 18 or part 95 of this chapter, the operator of the kit must operate under the authority of an FCC license holder or must secure an experimental authorization under part 5 of this chapter.

      3.1.2 *For EVMs annotated as FCC – FEDERAL COMMUNICATIONS COMMISSION Part 15 Compliant:*

      CAUTION

      This device complies with part 15 of the FCC Rules. Operation is subject to the following two conditions: (1) This device may not cause harmful interference, and (2) this device must accept any interference received, including interference that may cause undesired operation.

      Changes or modifications not expressly approved by the party responsible for compliance could void the user's authority to operate the equipment.

      FCC Interference Statement for Class A EVM devices

      NOTE: This equipment has been tested and found to comply with the limits for a Class A digital device, pursuant to part 15 of the FCC Rules. These limits are designed to provide reasonable protection against harmful interference when the equipment is operated in a commercial environment. This equipment generates, uses, and can radiate radio frequency energy and, if not installed and used in accordance with the instruction manual, may cause harmful interference to radio communications. Operation of this equipment in a residential area is likely to cause harmful interference in which case the user will be required to correct the interference at his own expense.

FCC Interference Statement for Class B EVM devices

NOTE: This equipment has been tested and found to comply with the limits for a Class B digital device, pursuant to part 15 of the FCC Rules. These limits are designed to provide reasonable protection against harmful interference in a residential installation. This equipment generates, uses and can radiate radio frequency energy and, if not installed and used in accordance with the instructions, may cause harmful interference to radio communications. However, there is no guarantee that interference will not occur in a particular installation. If this equipment does cause harmful interference to radio or television reception, which can be determined by turning the equipment off and on, the user is encouraged to try to correct the interference by one or more of the following measures:

- *Reorient or relocate the receiving antenna.*
- *Increase the separation between the equipment and receiver.*
- *Connect the equipment into an outlet on a circuit different from that to which the receiver is connected.*
- *Consult the dealer or an experienced radio/TV technician for help.*

3.2 *Canada*

3.2.1 *For EVMs issued with an Industry Canada Certificate of Conformance to RSS-210 or RSS-247*

Concerning EVMs Including Radio Transmitters:

This device complies with Industry Canada license-exempt RSSs. Operation is subject to the following two conditions:

(1) this device may not cause interference, and (2) this device must accept any interference, including interference that may cause undesired operation of the device.

Concernant les EVMs avec appareils radio:

Le présent appareil est conforme aux CNR d'Industrie Canada applicables aux appareils radio exempts de licence. L'exploitation est autorisée aux deux conditions suivantes: (1) l'appareil ne doit pas produire de brouillage, et (2) l'utilisateur de l'appareil doit accepter tout brouillage radioélectrique subi, même si le brouillage est susceptible d'en compromettre le fonctionnement.

Concerning EVMs Including Detachable Antennas:

Under Industry Canada regulations, this radio transmitter may only operate using an antenna of a type and maximum (or lesser) gain approved for the transmitter by Industry Canada. To reduce potential radio interference to other users, the antenna type and its gain should be so chosen that the equivalent isotropically radiated power (e.i.r.p.) is not more than that necessary for successful communication. This radio transmitter has been approved by Industry Canada to operate with the antenna types listed in the user guide with the maximum permissible gain and required antenna impedance for each antenna type indicated. Antenna types not included in this list, having a gain greater than the maximum gain indicated for that type, are strictly prohibited for use with this device.

Concernant les EVMs avec antennes détachables

Conformément à la réglementation d'Industrie Canada, le présent émetteur radio peut fonctionner avec une antenne d'un type et d'un gain maximal (ou inférieur) approuvé pour l'émetteur par Industrie Canada. Dans le but de réduire les risques de brouillage radioélectrique à l'intention des autres utilisateurs, il faut choisir le type d'antenne et son gain de sorte que la puissance isotrope rayonnée équivalente (p.i.r.e.) ne dépasse pas l'intensité nécessaire à l'établissement d'une communication satisfaisante. Le présent émetteur radio a été approuvé par Industrie Canada pour fonctionner avec les types d'antenne énumérés dans le manuel d'usage et ayant un gain admissible maximal et l'impédance requise pour chaque type d'antenne. Les types d'antenne non inclus dans cette liste, ou dont le gain est supérieur au gain maximal indiqué, sont strictement interdits pour l'exploitation de l'émetteur

3.3 *Japan*

3.3.1 *Notice for EVMs delivered in Japan:* Please see http://www.tij.co.jp/lsds/ti_ja/general/eStore/notice_01.page 日本国内に輸入される評価用キット、ボードについては、次のところをご覧ください。
http://www.tij.co.jp/lsds/ti_ja/general/eStore/notice_01.page

3.3.2 *Notice for Users of EVMs Considered "Radio Frequency Products" in Japan:* EVMs entering Japan may not be certified by TI as conforming to Technical Regulations of Radio Law of Japan.

If User uses EVMs in Japan, not certified to Technical Regulations of Radio Law of Japan, User is required to follow the instructions set forth by Radio Law of Japan, which includes, but is not limited to, the instructions below with respect to EVMs (which for the avoidance of doubt are stated strictly for convenience and should be verified by User):

1. Use EVMs in a shielded room or any other test facility as defined in the notification #173 issued by Ministry of Internal Affairs and Communications on March 28, 2006, based on Sub-section 1.1 of Article 6 of the Ministry's Rule for Enforcement of Radio Law of Japan,
2. Use EVMs only after User obtains the license of Test Radio Station as provided in Radio Law of Japan with respect to EVMs, or
3. Use of EVMs only after User obtains the Technical Regulations Conformity Certification as provided in Radio Law of Japan with respect to EVMs. Also, do not transfer EVMs, unless User gives the same notice above to the transferee. Please note that if User does not follow the instructions above, User will be subject to penalties of Radio Law of Japan.

【無線電波を送信する製品の開発キットをお使いになる際の注意事項】 開発キットの中には技術基準適合証明を受けていないものがあります。 技術適合証明を受けていないもののご使用に際しては、電波法遵守のため、以下のいずれかの措置を取っていただく必要がありますのでご注意ください。

1. 電波法施行規則第6条第1項第1号に基づく平成18年3月28日総務省告示第173号で定められた電波暗室等の試験設備でご使用いただく。
2. 実験局の免許を取得後ご使用いただく。
3. 技術基準適合証明を取得後ご使用いただく。

なお、本製品は、上記の「ご使用にあたっての注意」を譲渡先、移転先に通知しない限り、譲渡、移転できないものとします。

上記を遵守頂けない場合は、電波法の罰則が適用される可能性があることをご留意ください。 日本テキサス・インスツルメンツ株式会社

東京都新宿区西新宿６丁目２４番１号

西新宿三井ビル

3.3.3 *Notice for EVMs for Power Line Communication:* Please see http://www.tij.co.jp/lsds/ti_ja/general/eStore/notice_02.page

電力線搬送波通信についての開発キットをお使いになる際の注意事項については、次のところをご覧ください。http://www.tij.co.jp/lsds/ti_ja/general/eStore/notice_02.page

3.4 *European Union*

3.4.1 *For EVMs subject to EU Directive 2014/30/EU (Electromagnetic Compatibility Directive)*:

This is a class A product intended for use in environments other than domestic environments that are connected to a low-voltage power-supply network that supplies buildings used for domestic purposes. In a domestic environment this product may cause radio interference in which case the user may be required to take adequate measures.

4 *EVM Use Restrictions and Warnings:*

4.1 EVMS ARE NOT FOR USE IN FUNCTIONAL SAFETY AND/OR SAFETY CRITICAL EVALUATIONS, INCLUDING BUT NOT LIMITED TO EVALUATIONS OF LIFE SUPPORT APPLICATIONS.

4.2 User must read and apply the user guide and other available documentation provided by TI regarding the EVM prior to handling or using the EVM, including without limitation any warning or restriction notices. The notices contain important safety information related to, for example, temperatures and voltages.

4.3 *Safety-Related Warnings and Restrictions:*

4.3.1 User shall operate the EVM within TI's recommended specifications and environmental considerations stated in the user guide, other available documentation provided by TI, and any other applicable requirements and employ reasonable and customary safeguards. Exceeding the specified performance ratings and specifications (including but not limited to input and output voltage, current, power, and environmental ranges) for the EVM may cause personal injury or death, or property damage. If there are questions concerning performance ratings and specifications, User should contact a TI field representative prior to connecting interface electronics including input power and intended loads. Any loads applied outside of the specified output range may also result in unintended and/or inaccurate operation and/or possible permanent damage to the EVM and/or interface electronics. Please consult the EVM user guide prior to connecting any load to the EVM output. If there is uncertainty as to the load specification, please contact a TI field representative. During normal operation, even with the inputs and outputs kept within the specified allowable ranges, some circuit components may have elevated case temperatures. These components include but are not limited to linear regulators, switching transistors, pass transistors, current sense resistors, and heat sinks, which can be identified using the information in the associated documentation. When working with the EVM, please be aware that the EVM may become very warm.

4.3.2 EVMs are intended solely for use by technically qualified, professional electronics experts who are familiar with the dangers and application risks associated with handling electrical mechanical components, systems, and subsystems. User assumes all responsibility and liability for proper and safe handling and use of the EVM by User or its employees, affiliates, contractors or designees. User assumes all responsibility and liability to ensure that any interfaces (electronic and/or mechanical) between the EVM and any human body are designed with suitable isolation and means to safely limit accessible leakage currents to minimize the risk of electrical shock hazard. User assumes all responsibility and liability for any improper or unsafe handling or use of the EVM by User or its employees, affiliates, contractors or designees.

4.4 User assumes all responsibility and liability to determine whether the EVM is subject to any applicable international, federal, state, or local laws and regulations related to User's handling and use of the EVM and, if applicable, User assumes all responsibility and liability for compliance in all respects with such laws and regulations. User assumes all responsibility and liability for proper disposal and recycling of the EVM consistent with all applicable international, federal, state, and local requirements.

5. *Accuracy of Information:* To the extent TI provides information on the availability and function of EVMs, TI attempts to be as accurate as possible. However, TI does not warrant the accuracy of EVM descriptions, EVM availability or other information on its websites as accurate, complete, reliable, current, or error-free.

6. *Disclaimers:*

   6.1 EXCEPT AS SET FORTH ABOVE, EVMS AND ANY MATERIALS PROVIDED WITH THE EVM (INCLUDING, BUT NOT LIMITED TO, REFERENCE DESIGNS AND THE DESIGN OF THE EVM ITSELF) ARE PROVIDED "AS IS" AND "WITH ALL FAULTS." TI DISCLAIMS ALL OTHER WARRANTIES, EXPRESS OR IMPLIED, REGARDING SUCH ITEMS, INCLUDING BUT NOT LIMITED TO ANY EPIDEMIC FAILURE WARRANTY OR IMPLIED WARRANTIES OF MERCHANTABILITY OR FITNESS FOR A PARTICULAR PURPOSE OR NON-INFRINGEMENT OF ANY THIRD PARTY PATENTS, COPYRIGHTS, TRADE SECRETS OR OTHER INTELLECTUAL PROPERTY RIGHTS.

   6.2 EXCEPT FOR THE LIMITED RIGHT TO USE THE EVM SET FORTH HEREIN, NOTHING IN THESE TERMS SHALL BE CONSTRUED AS GRANTING OR CONFERRING ANY RIGHTS BY LICENSE, PATENT, OR ANY OTHER INDUSTRIAL OR INTELLECTUAL PROPERTY RIGHT OF TI, ITS SUPPLIERS/LICENSORS OR ANY OTHER THIRD PARTY, TO USE THE EVM IN ANY FINISHED END-USER OR READY-TO-USE FINAL PRODUCT, OR FOR ANY INVENTION, DISCOVERY OR IMPROVEMENT, REGARDLESS OF WHEN MADE, CONCEIVED OR ACQUIRED.

7. *USER'S INDEMNITY OBLIGATIONS AND REPRESENTATIONS.* USER WILL DEFEND, INDEMNIFY AND HOLD TI, ITS LICENSORS AND THEIR REPRESENTATIVES HARMLESS FROM AND AGAINST ANY AND ALL CLAIMS, DAMAGES, LOSSES, EXPENSES, COSTS AND LIABILITIES (COLLECTIVELY, "CLAIMS") ARISING OUT OF OR IN CONNECTION WITH ANY HANDLING OR USE OF THE EVM THAT IS NOT IN ACCORDANCE WITH THESE TERMS. THIS OBLIGATION SHALL APPLY WHETHER CLAIMS ARISE UNDER STATUTE, REGULATION, OR THE LAW OF TORT, CONTRACT OR ANY OTHER LEGAL THEORY, AND EVEN IF THE EVM FAILS TO PERFORM AS DESCRIBED OR EXPECTED.

8. *Limitations on Damages and Liability:*

   8.1 *General Limitations*. IN NO EVENT SHALL TI BE LIABLE FOR ANY SPECIAL, COLLATERAL, INDIRECT, PUNITIVE, INCIDENTAL, CONSEQUENTIAL, OR EXEMPLARY DAMAGES IN CONNECTION WITH OR ARISING OUT OF THESE TERMS OR THE USE OF THE EVMS , REGARDLESS OF WHETHER TI HAS BEEN ADVISED OF THE POSSIBILITY OF SUCH DAMAGES. EXCLUDED DAMAGES INCLUDE, BUT ARE NOT LIMITED TO, COST OF REMOVAL OR REINSTALLATION, ANCILLARY COSTS TO THE PROCUREMENT OF SUBSTITUTE GOODS OR SERVICES, RETESTING, OUTSIDE COMPUTER TIME, LABOR COSTS, LOSS OF GOODWILL, LOSS OF PROFITS, LOSS OF SAVINGS, LOSS OF USE, LOSS OF DATA, OR BUSINESS INTERRUPTION. NO CLAIM, SUIT OR ACTION SHALL BE BROUGHT AGAINST TI MORE THAN TWELVE (12) MONTHS AFTER THE EVENT THAT GAVE RISE TO THE CAUSE OF ACTION HAS OCCURRED.

   8.2 *Specific Limitations.* IN NO EVENT SHALL TI'S AGGREGATE LIABILITY FROM ANY USE OF AN EVM PROVIDED HEREUNDER, INCLUDING FROM ANY WARRANTY, INDEMITY OR OTHER OBLIGATION ARISING OUT OF OR IN CONNECTION WITH THESE TERMS, , EXCEED THE TOTAL AMOUNT PAID TO TI BY USER FOR THE PARTICULAR EVM(S) AT ISSUE DURING THE PRIOR TWELVE (12) MONTHS WITH RESPECT TO WHICH LOSSES OR DAMAGES ARE CLAIMED. THE EXISTENCE OF MORE THAN ONE CLAIM SHALL NOT ENLARGE OR EXTEND THIS LIMIT.

9. *Return Policy.* Except as otherwise provided, TI does not offer any refunds, returns, or exchanges. Furthermore, no return of EVM(s) will be accepted if the package has been opened and no return of the EVM(s) will be accepted if they are damaged or otherwise not in a resalable condition. If User feels it has been incorrectly charged for the EVM(s) it ordered or that delivery violates the applicable order, User should contact TI. All refunds will be made in full within thirty (30) working days from the return of the components(s), excluding any postage or packaging costs.

10. *Governing Law:* These terms and conditions shall be governed by and interpreted in accordance with the laws of the State of Texas, without reference to conflict-of-laws principles. User agrees that non-exclusive jurisdiction for any dispute arising out of or relating to these terms and conditions lies within courts located in the State of Texas and consents to venue in Dallas County, Texas. Notwithstanding the foregoing, any judgment may be enforced in any United States or foreign court, and TI may seek injunctive relief in any United States or foreign court.

Mailing Address: Texas Instruments, Post Office Box 655303, Dallas, Texas 75265
Copyright © 2017, Texas Instruments Incorporated

IMPORTANT NOTICE FOR TI DESIGN INFORMATION AND RESOURCES

Texas Instruments Incorporated ('TI") technical, application or other design advice, services or information, including, but not limited to, reference designs and materials relating to evaluation modules, (collectively, "TI Resources") are intended to assist designers who are developing applications that incorporate TI products; by downloading, accessing or using any particular TI Resource in any way, you (individually or, if you are acting on behalf of a company, your company) agree to use it solely for this purpose and subject to the terms of this Notice.

TI's provision of TI Resources does not expand or otherwise alter TI's applicable published warranties or warranty disclaimers for TI products, and no additional obligations or liabilities arise from TI providing such TI Resources. TI reserves the right to make corrections, enhancements, improvements and other changes to its TI Resources.

You understand and agree that you remain responsible for using your independent analysis, evaluation and judgment in designing your applications and that you have full and exclusive responsibility to assure the safety of your applications and compliance of your applications (and of all TI products used in or for your applications) with all applicable regulations, laws and other applicable requirements. You represent that, with respect to your applications, you have all the necessary expertise to create and implement safeguards that (1) anticipate dangerous consequences of failures, (2) monitor failures and their consequences, and (3) lessen the likelihood of failures that might cause harm and take appropriate actions. You agree that prior to using or distributing any applications that include TI products, you will thoroughly test such applications and the functionality of such TI products as used in such applications. TI has not conducted any testing other than that specifically described in the published documentation for a particular TI Resource.

You are authorized to use, copy and modify any individual TI Resource only in connection with the development of applications that include the TI product(s) identified in such TI Resource. NO OTHER LICENSE, EXPRESS OR IMPLIED, BY ESTOPPEL OR OTHERWISE TO ANY OTHER TI INTELLECTUAL PROPERTY RIGHT, AND NO LICENSE TO ANY TECHNOLOGY OR INTELLECTUAL PROPERTY RIGHT OF TI OR ANY THIRD PARTY IS GRANTED HEREIN, including but not limited to any patent right, copyright, mask work right, or other intellectual property right relating to any combination, machine, or process in which TI products or services are used. Information regarding or referencing third-party products or services does not constitute a license to use such products or services, or a warranty or endorsement thereof. Use of TI Resources may require a license from a third party under the patents or other intellectual property of the third party, or a license from TI under the patents or other intellectual property of TI.

TI RESOURCES ARE PROVIDED "AS IS" AND WITH ALL FAULTS. TI DISCLAIMS ALL OTHER WARRANTIES OR REPRESENTATIONS, EXPRESS OR IMPLIED, REGARDING TI RESOURCES OR USE THEREOF, INCLUDING BUT NOT LIMITED TO ACCURACY OR COMPLETENESS, TITLE, ANY EPIDEMIC FAILURE WARRANTY AND ANY IMPLIED WARRANTIES OF MERCHANTABILITY, FITNESS FOR A PARTICULAR PURPOSE, AND NON-INFRINGEMENT OF ANY THIRD PARTY INTELLECTUAL PROPERTY RIGHTS.

TI SHALL NOT BE LIABLE FOR AND SHALL NOT DEFEND OR INDEMNIFY YOU AGAINST ANY CLAIM, INCLUDING BUT NOT LIMITED TO ANY INFRINGEMENT CLAIM THAT RELATES TO OR IS BASED ON ANY COMBINATION OF PRODUCTS EVEN IF DESCRIBED IN TI RESOURCES OR OTHERWISE. IN NO EVENT SHALL TI BE LIABLE FOR ANY ACTUAL, DIRECT, SPECIAL, COLLATERAL, INDIRECT, PUNITIVE, INCIDENTAL, CONSEQUENTIAL OR EXEMPLARY DAMAGES IN CONNECTION WITH OR ARISING OUT OF TI RESOURCES OR USE THEREOF, AND REGARDLESS OF WHETHER TI HAS BEEN ADVISED OF THE POSSIBILITY OF SUCH DAMAGES.

You agree to fully indemnify TI and its representatives against any damages, costs, losses, and/or liabilities arising out of your non-compliance with the terms and provisions of this Notice.

This Notice applies to TI Resources. Additional terms apply to the use and purchase of certain types of materials, TI products and services. These include; without limitation, TI's standard terms for semiconductor products http://www.ti.com/sc/docs/stdterms.htm), evaluation modules, and samples (http://www.ti.com/sc/docs/sampterms.htm).

Mailing Address: Texas Instruments, Post Office Box 655303, Dallas, Texas 75265
Copyright © 2017, Texas Instruments Incorporated