LM5113 5A, 100V Half-Bridge Gate Driver for Enhancement Mode GaN FETs

Check for Samples: LM5113

FEATURES

- **Independent High-Side and Low-Side TTL Logic Inputs**
- **1.2A/5A Peak Source/Sink Current**
- **High-Side Floating Bias Voltage Rail Operates up to 100VDC**
- **Internal Bootstrap Supply Voltage Clamping**
- **Split Outputs for Adjustable Turn-on/Turn-off Strength**
- **0.6Ω /2.1Ω Pull-down/Pull-up Resistance**
- **Fast Propagation Times (28ns Typical)**
- **Excellent Propagation Delay Matching (1.5ns Typical)**
- **Supply Rail Under-Voltage Lockout**
- **Low Power Consumption**

TYPICAL APPLICATIONS

- **Current Fed Push-Pull converters**
- **Half and Full-Bridge converters**
- **Synchronous Buck converters**
- **Two-switch Forward converters**
- **Forward with Active Clamp converters**

PACKAGES

- **WSON-10 (4 mm x 4 mm)**
- **DSBGA (2 mm x 2 mm)**

DESCRIPTION

The LM5113 is designed to drive both the high-side and the low-side enhancement mode Gallium Nitride (GaN) FETs in a synchronous buck or a half bridge configuration. The floating high-side driver is capable of driving a high-side enhancement mode GaN FET operating up to 100V. The high-side bias voltage is generated using a bootstrap technique and is internally clamped at 5.2V, which prevents the gate voltage from exceeding the maximum gate-source voltage rating of enhancement mode GaN FETs. The inputs of the LM5113 are TTL logic compatible, and can withstand input voltages up to 14V regardless of the VDD voltage. The LM5113 has split gate outputs, providing flexibility to adjust the turn-on and turn-off strength independently.

In addition, the strong sink capability of the LM5113 maintains the gate in the low state, preventing unintended turn-on during switching. The LM5113 can operate up to several MHz. The LM5113 is available in a standard WSON-10 pin package and a 12-bump DSBGA package. The WSON-10 pin package contains an exposed pad to aid power dissipation. The DSBGA package offers a compact footprint and minimized package inductance.

Please be aware that an important notice concerning availability, standard warranty, and use in critical applications of Texas Instruments semiconductor products and disclaimers thereto appears at the end of this data sheet.

All trademarks are the property of their respective owners.

PRODUCTION DATA information is current as of publication date. Products conform to specifications per the terms of the Texas Instruments standard warranty. Production processing does not necessarily include testing of all parameters.

Copyright © 2011–2013, Texas Instruments Incorporated

Typical Application

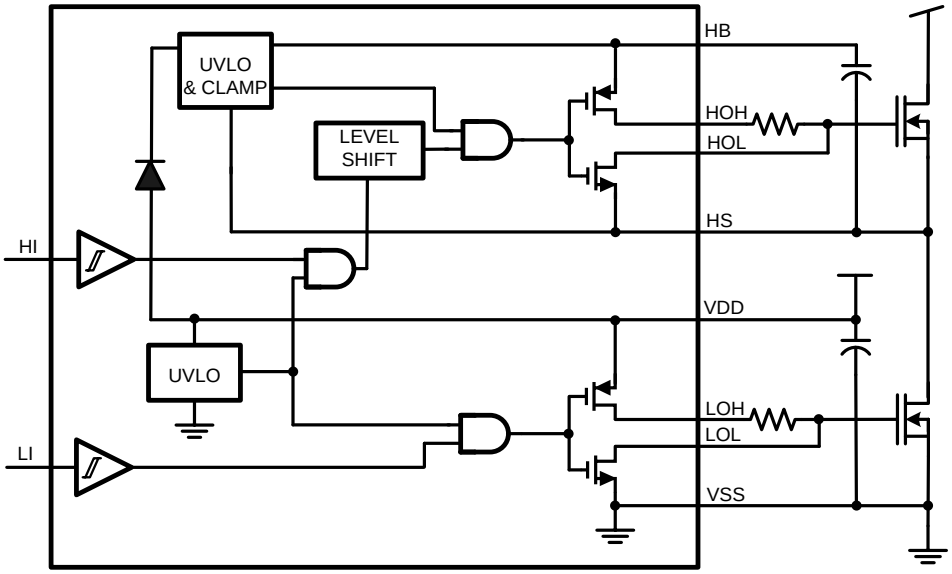

Figure 1.

Truth Table

HI	LI	HOH	HOL	LOH	LOL
L	L	Open	L	Open	L
L	H	Open	L	H	Open
H	L	H	Open	Open	L
H	H	H	Open	H	Open

Copyright © 2011–2013, Texas Instruments Incorporated

Connection Diagram

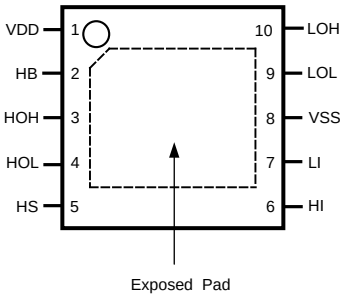

Figure 2. WSON Package
Package Number DPR0010A

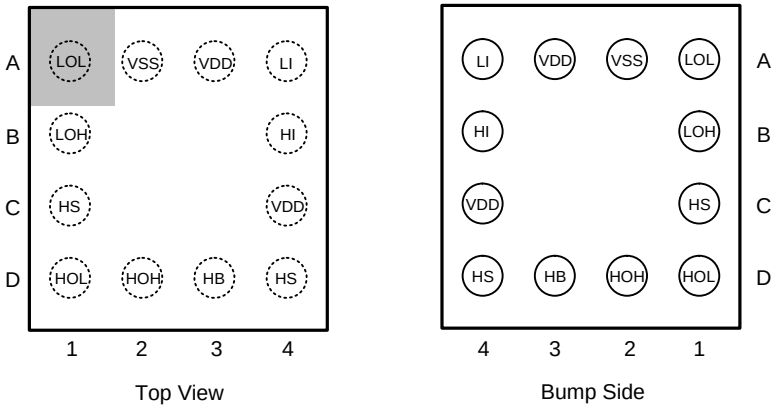

DSBGA Package
Package Number YFX0012FLA

PIN DESCRIPTIONS

Pin Number		Name	Description	Applications Information
DSBGA	WSON-10			
A3, C4 (1)	1	VDD	5V Positive gate drive supply	Locally decouple to VSS using low ESR/ESL capacitor located as close to the IC as possible.
D3	2	HB	High-side gate driver bootstrap rail	Connect the positive terminal of the bootstrap capacitor to HB and the negative terminal to HS. The bootstrap capacitor should be placed as close to the IC as possible.
D2	3	HOH	High-side gate driver turn-on output	Connect to the gate of high-side GaN FET with a short, low inductance path. A gate resistor can be used to adjust the turn-on speed.
D1	4	HOL	High-side gate driver turn-off output	Connect to the gate of high-side GaN FET with a short, low inductance path. A gate resistor can be used to adjust the turn-off speed.
C1, D4 (1)	5	HS	High-side GaN FET source connection	Connect to the bootstrap capacitor negative terminal and the source of the high-side GaN FET.
B4	6	HI	High-side driver control input	The LM5113 inputs have TTL type thresholds. Unused inputs should be tied to ground and not left open.
A4	7	LI	Low-side driver control input	The LM5113 inputs have TTL type thresholds. Unused inputs should be tied to ground and not left open.

(1) A3 and C4, C1 and D4 are internally connected.

Copyright © 2011–2013, Texas Instruments Incorporated

PIN DESCRIPTIONS (continued)

Pin Number		Name	Description	Applications Information
DSBGA	WSON-10			
A2	8	VSS	Ground return	All signals are referenced to this ground.
A1	9	LOL	Low-side gate driver sink-current output	Connect to the gate of the low-side GaN FET with a short, low inductance path. A gate resistor can be used to adjust the turn-off speed.
B1	10	LOH	Low-side gate driver source-current output	Connect to the gate of high-side GaN FET with a short, low inductance path. A gate resistor can be used to adjust the turn-on speed.
	EP		Exposed Pad	It is recommended that the exposed pad on the bottom of the package be soldered to ground plane on the PC board to aid thermal dissipation.

These devices have limited built-in ESD protection. The leads should be shorted together or the device placed in conductive foam during storage or handling to prevent electrostatic damage to the MOS gates.

Absolute Maximum Ratings(1)

VDD to VSS	−0.3V to 7V
HB to HS	−0.3V to 7V
LI or HI Input	−0.3V to 15V
LOH, LOL Output	−0.3V to VDD +0.3V
HOH, HOL Output	V_{HS} −0.3V to V_{HB} +0.3V
HS to VSS	−5V to +100V
HB to VSS	0 to 107V
HB to VDD	0 to 100V
Junction Temperature	+150°C
Storage Temperature Range	−55°C to +150°C
ESD Rating HBM	2 kV

(1) Absolute Maximum Ratings indicate limits beyond which damage to the component may occur. Operating Ratings are conditions under which operation of the device is ensured. Operating Ratings do not imply ensured performance limits. For ensured performance limits and associated test conditions, see the Electrical Characteristics tables.

Recommended Operating Conditions

VDD	+4.5V to +5.5V
LI or HI Input	0V to +14V
HS	−5V to 100V
HB	V_{HS} +4V to V_{HS} +5.5V
HS Slew Rate	<50 V/ns
Junction Temperature	−40°C to +125°C

Electrical Characteristics

Limits in standard type are for T_J = 25°C only; limits in boldface type apply over the junction temperature (T_J) range of -40°C to +125°C. Minimum and Maximum limits are ensured through test, design, or statistical correlation. Typical values represent the most likely parametric norm at T_J = 25°C, and are provided for reference purposes only. Unless otherwise specified, V_{DD} = V_{HB} = 5V, V_{SS} = V_{HS} = 0V, No Load on LOL and HOL or HOH and HOL(1).

Symbol	Parameter	Conditions	Min	Typ	Max	Units
SUPPLY CURRENTS						
I_{DD}	VDD Quiescent Current	LI = HI = 0V		0.07	**0.1**	mA
I_{DDO}	VDD Operating Current	f = 500 kHz		2.0	**3.0**	mA
I_{HB}	Total HB Quiescent Current	LI = HI = 0V		0.08	**0.1**	mA

(1) Min and Max limits are 100% production tested at 25°C. Limits over the operating temperature range are ensured through correlation using Statistical Quality Control (SQC) methods. Limits are used to calculate Average Outgoing Quality Level (AOQL).

Copyright © 2011–2013, Texas Instruments Incorporated

Electrical Characteristics (continued)

Limits in standard type are for T_J = 25°C only; limits in boldface type apply over the junction temperature (T_J) range of -40°C to +125°C. Minimum and Maximum limits are ensured through test, design, or statistical correlation. Typical values represent the most likely parametric norm at T_J = 25°C, and are provided for reference purposes only. Unless otherwise specified, V_{DD} = V_{HB} = 5V, V_{SS} = V_{HS} = 0V, No Load on LOL and HOL or HOH and HOL(1).

Symbol	Parameter	Conditions	Min	Typ	Max	Units
I_{HBO}	Total HB Operating Current	f = 500 kHz		1.5	**2.5**	mA
I_{HBS}	HB to VSS Current, Quiescent	HS = HB = 100V		0.1	**8**	µA
I_{HBSO}	HB to VSS Current, Operating	f = 500 kHz		0.4	**1.0**	mA
INPUT PINS						
V_{IR}	Input Voltage Threshold	Rising Edge	**1.89**	2.06	**2.18**	V
V_{IF}	Input Voltage Threshold	Falling Edge	**1.48**	1.66	**1.76**	V
V_{IHYS}	Input Voltage Hysteresis			400		mV
R_I	Input Pulldown Resistance		**100**	200	**300**	kΩ
UNDER VOLTAGE PROTECTION						
V_{DDR}	VDD Rising Threshold		**3.2**	3.8	**4.5**	V
V_{DDH}	VDD Threshold Hysteresis			0.2		V
V_{HBR}	HB Rising Threshold		**2.5**	3.2	**3.9**	V
V_{HBH}	HB Threshold Hysteresis			0.2		V
BOOTSTRAP DIODE						
V_{DL}	Low-Current Forward Voltage	I_{VDD-HB} = 100 µA		0.45	**0.65**	V
V_{DH}	High-Current Forward Voltage	I_{VDD-HB} = 100 mA		0.90	**1.00**	V
R_D	Dynamic Resistance	I_{VDD-HB} = 100 mA		1.85	**3.60**	Ω
	HB-HS Clamp	Regulation Voltage	**4.7**	5.2	**5.45**	V
LOW & HIGH SIDE GATE DRIVER						
V_{OL}	Low-Level Output Voltage	I_{HOL} = I_{LOL} = 100 mA		0.06	**0.10**	V
V_{OH}	High-Level Output Voltage V_{OH} = VDD – LOH or V_{OH} = HB – HOH	I_{HOH} = I_{LOH} = 100 mA		0.21	**0.31**	V
I_{OHL}	Peak Source Current	HOH, LOH = 0V		1.2		A
I_{OLL}	Peak Sink Current	HOL, LOL = 5V		5		A
I_{OHLK}	High-Level Output Leakage Current	HOH, LOH = 0V			**1.5**	µA
I_{OLLK}	Low-Level Output Leakage Current	HOL, LOL = 5V			**1.5**	µA
THERMAL RESISTANCE						
θ_{JA}	Junction to Ambient(2)	WSON-10		40		°C/W
		12-bump DSBGA		80		°C/W

(2) Four layer board with Cu finished thickness 1.5/1/1/1.5 oz. Maximum die size used. 5x body length of Cu trace on PCB top. 50 x 50mm ground and power planes embedded in PCB. See Application Note AN-1187 SNOA401.

Switching Characteristics

Limits in standard type are for T_J = 25°C only; limits in boldface type apply over the junction temperature (T_J) range of -40°C to +125°C. Minimum and Maximum limits are ensured through test, design, or statistical correlation. Typical values represent the most likely parametric norm at T_J = 25°C, and are provided for reference purposes only. Unless otherwise specified, V_{DD} = V_{HB} = 5V, V_{SS} = V_{HS} = 0V, No Load on LOL and LOH or HOL and HOH(1).

Symbol	Parameter	Conditions	Min	Typ	Max	Units
t_{LPHL}	LO Turn-Off Propagation Delay	LI Falling to LOL Falling		26.5	**45.0**	ns
t_{LPLH}	LO Turn-On Propagation Delay	LI Rising to LOH Rising		28.0	**45.0**	ns
t_{HPHL}	HO Turn-Off Propagation Delay	HI Falling to HOL Falling		26.5	**45.0**	ns
t_{HPLH}	HO Turn-On Propagation Delay	HI Rising to HOH Rising		28.0	**45.0**	ns
t_{MON}	Delay Matching: LO on & HO off			1.5	**8.0**	ns

(1) Min and Max limits are 100% production tested at 25°C. Limits over the operating temperature range are ensured through correlation using Statistical Quality Control (SQC) methods. Limits are used to calculate Average Outgoing Quality Level (AOQL).

Copyright © 2011–2013, Texas Instruments Incorporated

Switching Characteristics (continued)

Limits in standard type are for T_J = 25°C only; limits in boldface type apply over the junction temperature (T_J) range of -40°C to +125°C. Minimum and Maximum limits are ensured through test, design, or statistical correlation. Typical values represent the most likely parametric norm at T_J = 25°C, and are provided for reference purposes only. Unless otherwise specified, V_{DD} = V_{HB} = 5V, V_{SS} = V_{HS} = 0V, No Load on LOL and LOH or HOL and HOH(1).

Symbol	Parameter	Conditions	Min	Typ	Max	Units
t_{MOFF}	Delay Matching: LO off & HO on			1.5	**8.0**	ns
t_{HRC}	HO Rise Time (0.5V - 4.5V)	C_L = 1000 pF		7.0		ns
t_{LRC}	LO Rise Time (0.5V – 4.5V)	C_L = 1000 pF		7.0		ns
t_{HFC}	HO Fall Time (0.5V - 4.5V)	C_L = 1000 pF		1.5		ns
t_{LFC}	LO Fall Time (0.5V - 4.5V)	C_L = 1000 pF		1.5		ns
t_{PW}	Minimum Input Pulse Width that Changes the Output			10		ns
t_{BS}	Bootstrap Diode Reverse Recovery Time	I_F = 100mA, I_R = 100mA		40		ns

Timing Diagram

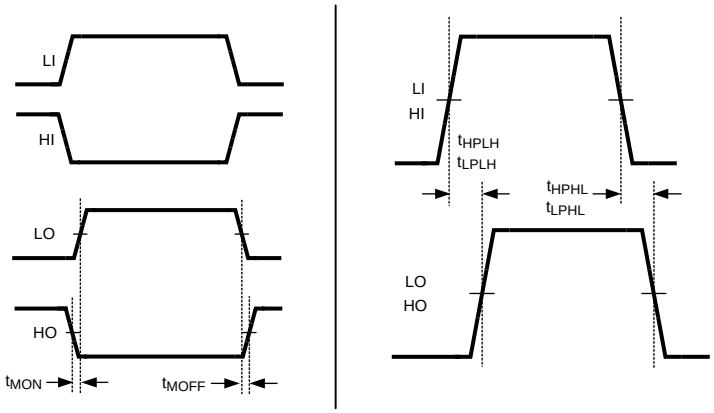

Figure 3. Timing Diagram

Copyright © 2011–2013, Texas Instruments Incorporated

Typical Performance Characteristics

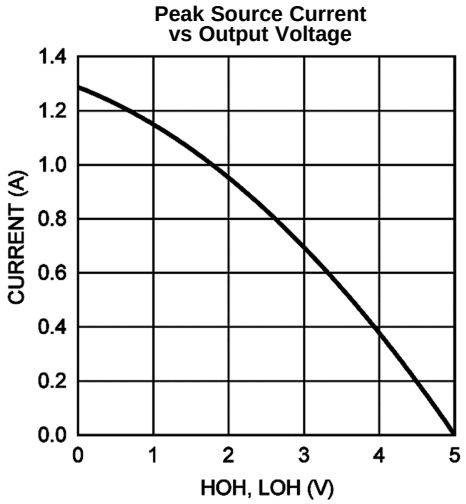

Figure 4.

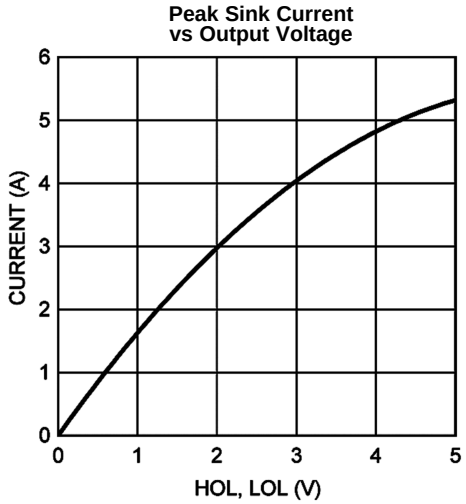

Figure 5.

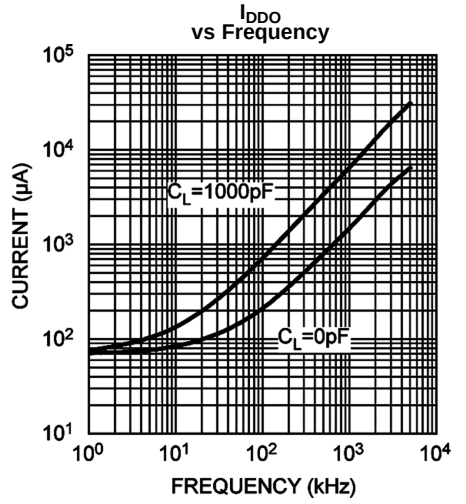

Figure 6.

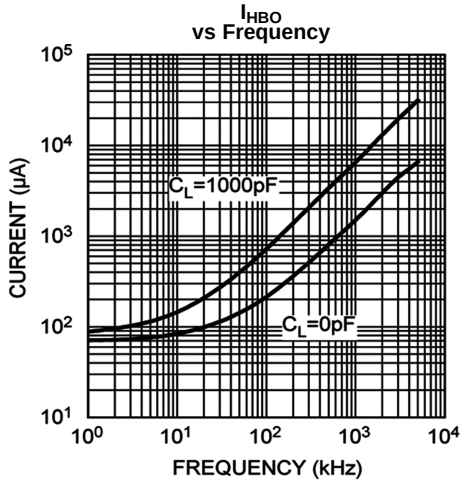

Figure 7.

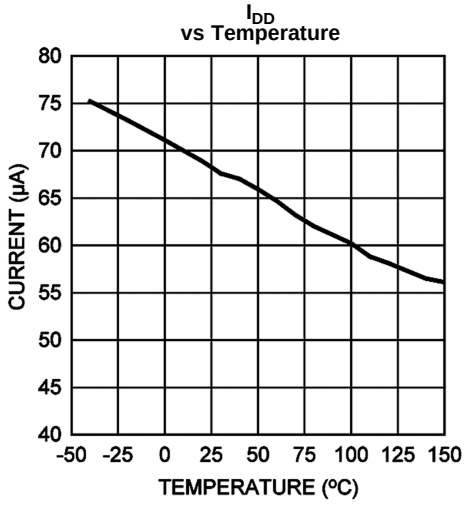

Figure 8.

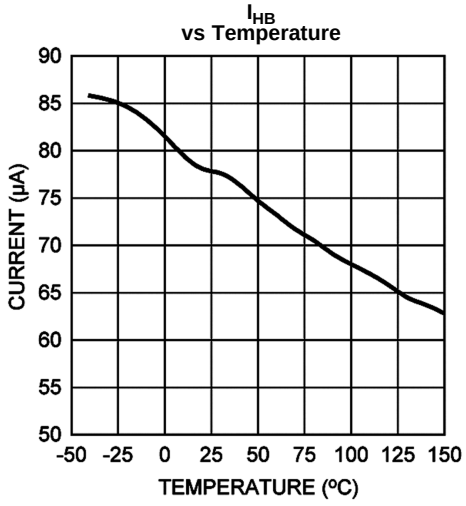

Figure 9.

Typical Performance Characteristics (continued)

UVLO Rising Thresholds vs Temperature

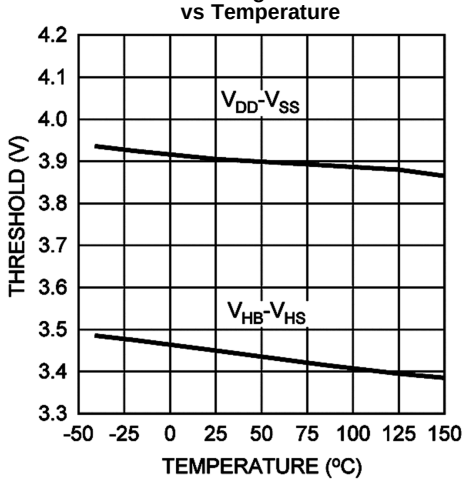

Figure 10.

UVLO Falling Thresholds vs Temperature

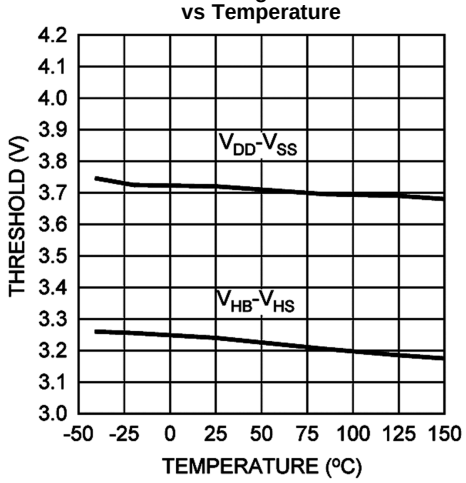

Figure 11.

Input Thresholds vs Temperature

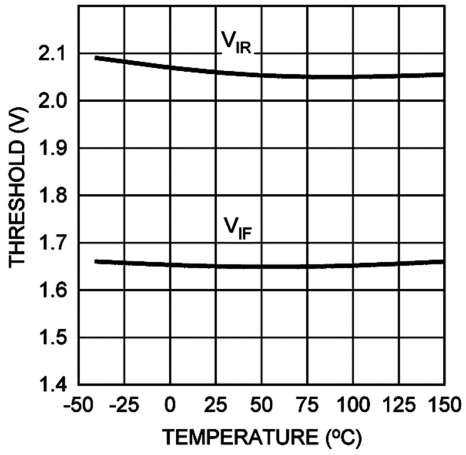

Figure 12.

Input Threshold Hysteresis vs Temperature

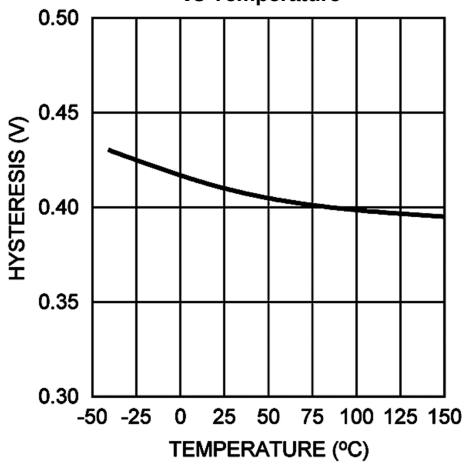

Figure 13.

Bootstrap Diode Forward Voltage

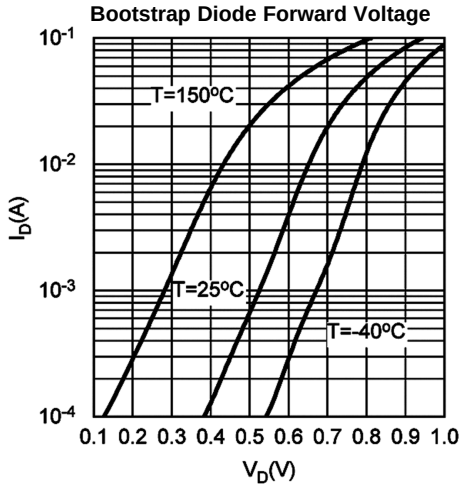

Figure 14.

Propagation Delay vs Temperature

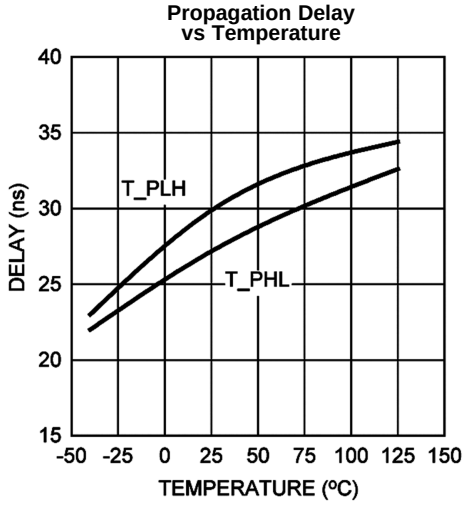

Figure 15.

Copyright © 2011–2013, Texas Instruments Incorporated

Typical Performance Characteristics (continued)

LO&HO Gate Drive — High/Low Level Output Voltage vs Temperature

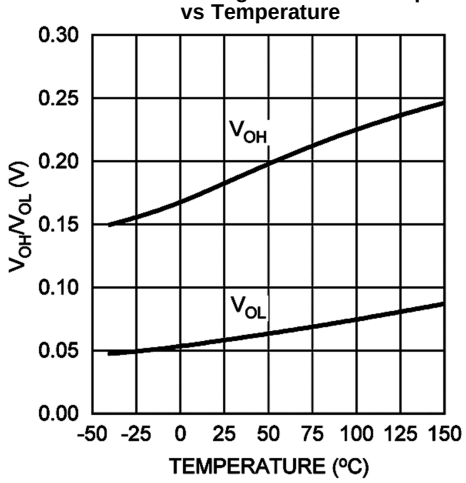

Figure 16.

HB Regulation Voltage vs Temperature

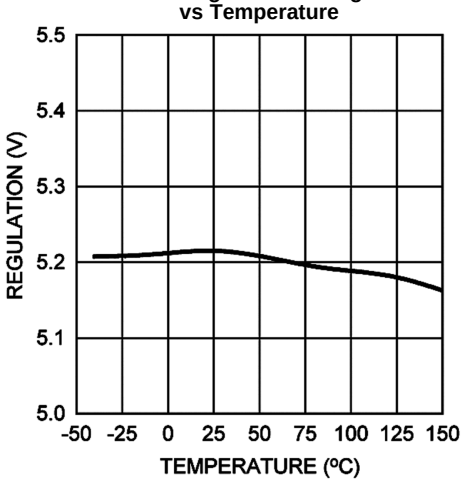

Figure 17.

(1) **Note** Unless otherwise specified, VDD = VHB = 5V, VSS = VHS = 0V.

Detailed Operating Description

The LM5113 is designed to drive both the high-side and the low-side enhancement mode Gallium Nitride FETs in a synchronous buck or a half-bridge configuration. The outputs of the LM5113 are independently controlled with TTL input thresholds. The inputs of the LM5113 can withstand voltages up to 14V regardless of the VDD voltage, and can be directly connected to the outputs of PWM controllers.

The high side driver uses the floating bootstrap capacitor voltage to drive the high-side FET. As shown in Figure 1, the bootstrap capacitor is recharged through an internal bootstrap diode each cycle when the HS pin is pulled below the VDD voltage. For inductive load applications the HS node will fall to a negative potential, clamped by the low side FET.

Due to the intrinsic feature of enhancement mode GaN FETs the source-to-drain voltage, when the gate is pulled low, is usually higher than a diode forward voltage drop. This can lead to an excessive bootstrap voltage that can damage the high-side GaN FET. The LM5113 solves this problem with an internal clamping circuit that prevents the bootstrap voltage from exceeding 5.2V typical.

The output pull-down and pull-up resistance of LM5113 is optimized for enhancement mode GaN FETs to achieve high frequency, efficient operation. The 0.6Ω pull-down resistance provides a robust low impedance turn-off path necessary to eliminate undesired turn-on induced by high dv/dt or high di/dt. The 2.1Ω pull-up resistance helps reduce the ringing and over-shoot of the switch node voltage. The split outputs of the LM5113 offer flexibility to adjust the turn-on and turn-off speed by independently adding additional impedance in either the turn-on path and/or the turn-off path.

The LM5113 has an Under-voltage Lockout (UVLO) on both the VDD and bootstrap supplies. When the VDD voltage is below the threshold voltage of 3.8V, both the HI and LI inputs are ignored, to prevent the GaN FETs from being partially turned on. Also if there is sufficient VDD voltage, the UVLO will actively pull the LOL and HOL low. When the HB to HS bootstrap voltage is below the UVLO threshold of 3.2V, only HOL is pulled low. Both UVLO threshold voltages have 200mV of hysteresis to avoid chattering.

Bypass Capacitor

The VDD bypass capacitor provides the gate charge for the low-side and high-side transistors and to absorb the reverse recovery charge of the bootstrap diode. The required bypass capacitance can be calculated as follows:

$$C_{VDD} > \frac{Q_{gH} + Q_{gL} + Q_{rr}}{\Delta V} \quad (1)$$

Q_{gH} and Q_{gL} are gate charge of the high-side and low-side transistors respectively. Q_{rr} is the reverse recovery charge of the bootstrap diode, which is typically around 4nC. ΔV is the maximum allowable voltage drop across the bypass capacitor. A 0.1uF or larger value, good quality, ceramic capacitor is recommended. The bypass capacitor should be placed as close to the pins of the IC as possible to minimize the parasitic inductance.

Bootstrap Capacitor

The bootstrap capacitor provides the gate charge for the high-side switch, dc bias power for HB under-voltage lockout circuit, and the reverse recovery charge of the bootstrap diode. The required bypass capacitance can be calculated as follows:

$$C_{BST} > \frac{Q_{gH} + I_{HB} \times t_{ON} + Q_{rr}}{\Delta V} \quad (2)$$

I_{HB} is the quiescent current of the high-side driver. t_{on} is the maximum on-time period of the high-side transistor. A good quality, ceramic capacitor should be used for the bootstrap capacitor. It is recommended to place the bootstrap capacitor as close to the HB and HS pins as possible.

Power Dissipation

The power consumption of the driver is an important measure that determines the maximum achievable operating frequency of the driver. It should be kept below the maximum power dissipation limit of the package at the operating temperature. The total power dissipation of the LM5113 is the sum of the gate driver losses and the bootstrap diode power loss.

The gate driver losses are incurred by charge and discharge of the capacitive load. It can be approximated as

Copyright © 2011–2013, Texas Instruments Incorporated

$$P = \left(C_{LoadH} + C_{LoadL}\right) \times V_{DD}^2 \times f_{SW} \quad (3)$$

C_{LoadH} and C_{LoadL} are the high-side and the low-side capacitive loads respectively. It can also be calculated with the total input gate charge of the high-side and the low-side transistors as

$$P = \left(Q_{gH} + Q_{gL} \right) \times V_{DD} \times f_{sw} \quad (4)$$

There are some additional losses in the gate drivers due to the internal CMOS stages used to buffer the LO and HO outputs. The following plot shows the measured gate driver power dissipation versus frequency and load capacitance. At higher frequencies and load capacitance values, the power dissipation is dominated by the power losses driving the output loads and agrees well with the above equations. This plot can be used to approximate the power losses due to the gate drivers.

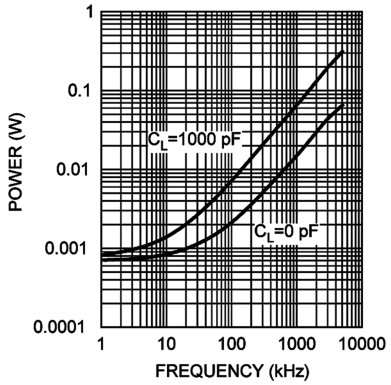

Gate Driver Power Dissipation (LO+HO)
VDD=+5V

Figure 18. Neglecting Bootstrap Diode Losses

The bootstrap diode power loss is the sum of the forward bias power loss that occurs while charging the bootstrap capacitor and the reverse bias power loss that occurs during reverse recovery. Since each of these events happens once per cycle, the diode power loss is proportional to the operating frequency. Larger capacitive loads require more energy to recharge the bootstrap capacitor resulting in more losses. Higher input voltages (V_{IN}) to the half bridge also result in higher reverse recovery losses.

The following two plots illustrate the forward bias power loss and the reverse bias power loss of the bootstrap diode respectively. The plots are generated based on calculations and lab measurements of the diode reverse time and current under several operating conditions. The plots can be used to predict the bootstrap diode power loss under different operating conditions.

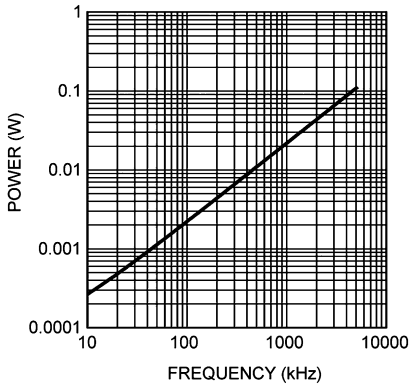

The Load of High-Side Driver is a GaN FET
with Total Gate Charge of 10nC

Figure 19. Forward Bias Power Loss of Bootstrap Diode V_{IN}=50V

Copyright © 2011–2013, Texas Instruments Incorporated

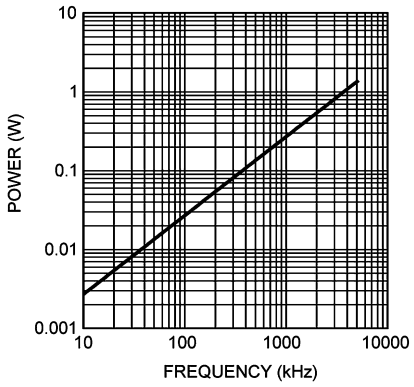

The Load of High-Side Driver is a GaN FET
with Total Gate Charge of 10nC

Figure 20. Reverse Recovery Power Loss of Bootstrap Diode V_{IN}=50V

The sum of the driver loss and the bootstrap diode loss is the total power loss of the IC. For a given ambient temperature, the maximum allowable power loss of the IC can be defined as

$$P = \frac{(T_J - T_A)}{\theta_{JA}} \quad (5)$$

Layout Considerations

Small gate capacitance and miller capacitance enable enhancement mode GaN FETs to operate with fast switching speed. The induced high dv/dt and di/dt, coupled with a low gate threshold voltage and limited headroom of enhancement mode GaN FETs gate voltage, make the circuit layout crucial to the optimum performance. Following are some hints.

1. The first priority in designing the layout of the driver is to confine the high peak currents that charge and discharge the GaN FETs gate into a minimal physical area. This will decrease the loop inductance and minimize noise issues on the gate terminal of the GaN FETs. The GaN FETs should be placed close to the driver.
2. The second high current path includes the bootstrap capacitor, the local ground referenced VDD bypass capacitor and low-side GaN FET. The bootstrap capacitor is recharged on a cycle-by-cycle basis through the bootstrap diode from the ground referenced VDD capacitor. The recharging occurs in a short time interval and involves high peak current. Minimizing this loop length and area on the circuit board is important to ensure reliable operation.
3. The parasitic inductance in series with the source of the high-side FET and the low-side FET can impose excessive negative voltage transients on the driver. It is recommended to connect HS pin and VSS pin to the respective source of the high-side and low-side transistors with a short and low-inductance path.
4. The parasitic source inductance, along with the gate capacitor and the driver pull-down path, can form a LCR resonant tank, resulting in gate voltage oscillations. An optional resistor or ferrite bead can be used to damp the ringing.
5. Low ESR/ESL capacitors must be connected close to the IC, between VDD and VSS pins and between the HB and HS pins to support the high peak current being drawn from VDD during turn-on of the FETs. It is most desirable to place the VDD decoupling capacitor and the HB to HS bootstrap capacitor on the same side of the PC board as the driver. The inductance of vias can impose excessive ringing on the IC pins.
6. To prevent excessive ringing on the input power bus, good decoupling practices are required by placing low ESR ceramic capacitors adjacent to the GaN FETs.

The following figures show recommended layout patterns for WSON-10 package and DSBGA package respectively. Two cases are considered: (1) Without any gate resistors; (2) With an optional turn-on gate resistor. It should be noted that 0402 DSBGA package is assumed for the passive components in the drawings. For information on DSBGA package assembly, refer to Application Note AN-1112 SNVA009.

Copyright © 2011–2013, Texas Instruments Incorporated

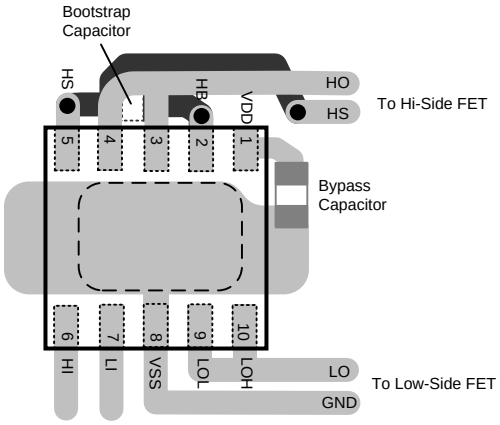

Figure 21. WSON-10 Without Gate Resistors

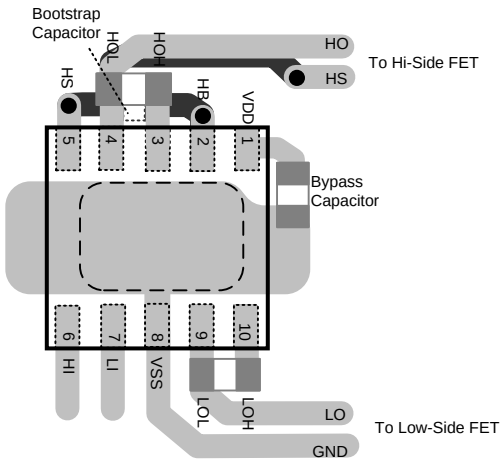

Figure 22. WSON-10 With HOH and LOH Gate Resistors

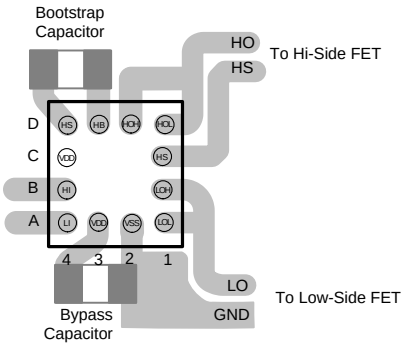

Figure 23. DSBGA Without Gate Resistors

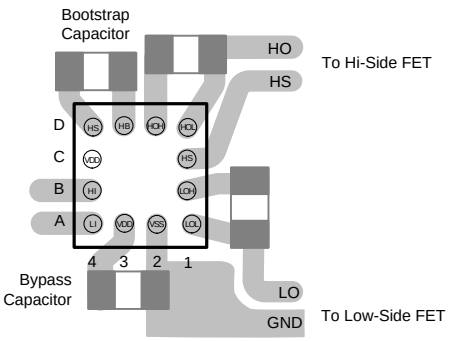

Figure 24. DSBGA With HOH and LOH Gate Resistors

REVISION HISTORY

Changes from Revision E (April 2013) to Revision F	Page
• Changed layout of National Data Sheet to TI format	13

Copyright © 2011–2013, Texas Instruments Incorporated

PACKAGING INFORMATION

Orderable Device	Status (1)	Package Type	Package Drawing	Pins	Package Qty	Eco Plan (2)	Lead/Ball Finish (6)	MSL Peak Temp (3)	Op Temp (°C)	Device Marking (4/5)	Samples
LM5113SD/NOPB	NRND	WSON	DPR	10	1000	Green (RoHS & no Sb/Br)	SN	Level-1-260C-UNLIM	-40 to 125	L5113	
LM5113SDE/NOPB	NRND	WSON	DPR	10	250	Green (RoHS & no Sb/Br)	SN	Level-1-260C-UNLIM	-40 to 125	L5113	
LM5113SDX/NOPB	NRND	WSON	DPR	10	4500	Green (RoHS & no Sb/Br)	SN	Level-1-260C-UNLIM	-40 to 125	L5113	
LM5113TME/NOPB	NRND	DSBGA	YFX	12	250	Green (RoHS & no Sb/Br)	SNAGCU	Level-1-260C-UNLIM		5113	
LM5113TMX/NOPB	NRND	DSBGA	YFX	12	3000	Green (RoHS & no Sb/Br)	SNAGCU	Level-1-260C-UNLIM		5113	

(1) The marketing status values are defined as follows:
ACTIVE: Product device recommended for new designs.
LIFEBUY: TI has announced that the device will be discontinued, and a lifetime-buy period is in effect.
NRND: Not recommended for new designs. Device is in production to support existing customers, but TI does not recommend using this part in a new design.
PREVIEW: Device has been announced but is not in production. Samples may or may not be available.
OBSOLETE: TI has discontinued the production of the device.

(2) **RoHS:** TI defines "RoHS" to mean semiconductor products that are compliant with the current EU RoHS requirements for all 10 RoHS substances, including the requirement that RoHS substance do not exceed 0.1% by weight in homogeneous materials. Where designed to be soldered at high temperatures, "RoHS" products are suitable for use in specified lead-free processes. TI may reference these types of products as "Pb-Free".
RoHS Exempt: TI defines "RoHS Exempt" to mean products that contain lead but are compliant with EU RoHS pursuant to a specific EU RoHS exemption.
Green: TI defines "Green" to mean the content of Chlorine (Cl) and Bromine (Br) based flame retardants meet JS709B low halogen requirements of <=1000ppm threshold. Antimony trioxide based flame retardants must also meet the <=1000ppm threshold requirement.

(3) MSL, Peak Temp. - The Moisture Sensitivity Level rating according to the JEDEC industry standard classifications, and peak solder temperature.

(4) There may be additional marking, which relates to the logo, the lot trace code information, or the environmental category on the device.

(5) Multiple Device Markings will be inside parentheses. Only one Device Marking contained in parentheses and separated by a "~" will appear on a device. If a line is indented then it is a continuation of the previous line and the two combined represent the entire Device Marking for that device.

(6) Lead/Ball Finish - Orderable Devices may have multiple material finish options. Finish options are separated by a vertical ruled line. Lead/Ball Finish values may wrap to two lines if the finish value exceeds the maximum column width.

Important Information and Disclaimer: The information provided on this page represents TI's knowledge and belief as of the date that it is provided. TI bases its knowledge and belief on information provided by third parties, and makes no representation or warranty as to the accuracy of such information. Efforts are underway to better integrate information from third parties. TI has taken and continues to take reasonable steps to provide representative and accurate information but may not have conducted destructive testing or chemical analysis on incoming materials and chemicals. TI and TI suppliers consider certain information to be proprietary, and thus CAS numbers and other limited information may not be available for release.

In no event shall TI's liability arising out of such information exceed the total purchase price of the TI part(s) at issue in this document sold by TI to Customer on an annual basis.

OTHER QUALIFIED VERSIONS OF LM5113 :

- Automotive: LM5113-Q1

NOTE: Qualified Version Definitions:

- Automotive - Q100 devices qualified for high-reliability automotive applications targeting zero defects

TAPE AND REEL INFORMATION

REEL DIMENSIONS

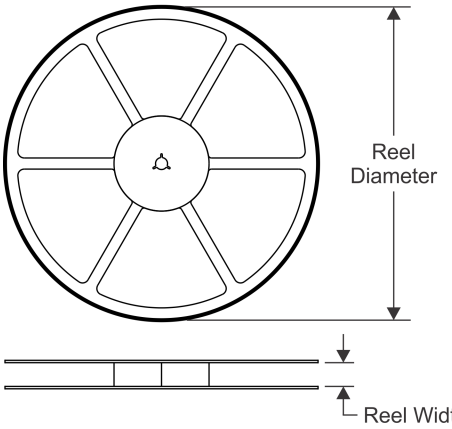

TAPE DIMENSIONS

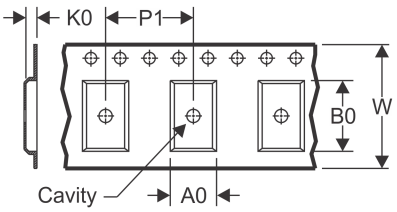

A0	Dimension designed to accommodate the component width
B0	Dimension designed to accommodate the component length
K0	Dimension designed to accommodate the component thickness
W	Overall width of the carrier tape
P1	Pitch between successive cavity centers

QUADRANT ASSIGNMENTS FOR PIN 1 ORIENTATION IN TAPE

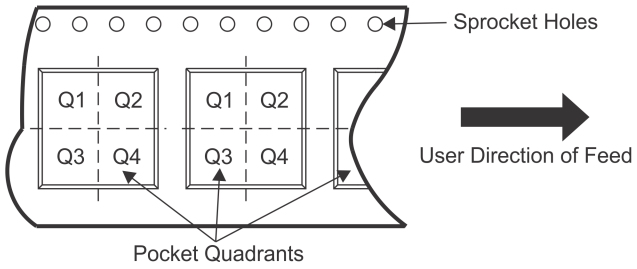

*All dimensions are nominal

Device	Package Type	Package Drawing	Pins	SPQ	Reel Diameter (mm)	Reel Width W1 (mm)	A0 (mm)	B0 (mm)	K0 (mm)	P1 (mm)	W (mm)	Pin1 Quadrant
LM5113SD/NOPB	WSON	DPR	10	1000	178.0	12.4	4.3	4.3	1.3	8.0	12.0	Q1
LM5113SDE/NOPB	WSON	DPR	10	250	178.0	12.4	4.3	4.3	1.3	8.0	12.0	Q1
LM5113SDX/NOPB	WSON	DPR	10	4500	330.0	12.4	4.3	4.3	1.3	8.0	12.0	Q1
LM5113TME/NOPB	DSBGA	YFX	12	250	178.0	8.4	1.85	2.01	0.76	4.0	8.0	Q1
LM5113TMX/NOPB	DSBGA	YFX	12	3000	178.0	8.4	1.85	2.01	0.76	4.0	8.0	Q1

TAPE AND REEL BOX DIMENSIONS

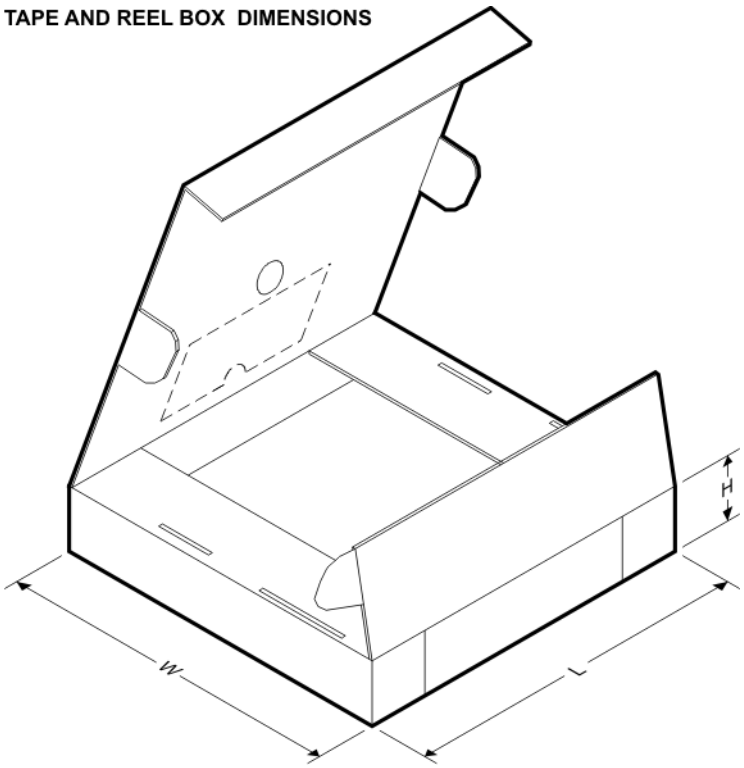

*All dimensions are nominal

Device	Package Type	Package Drawing	Pins	SPQ	Length (mm)	Width (mm)	Height (mm)
LM5113SD/NOPB	WSON	DPR	10	1000	210.0	185.0	35.0
LM5113SDE/NOPB	WSON	DPR	10	250	210.0	185.0	35.0
LM5113SDX/NOPB	WSON	DPR	10	4500	367.0	367.0	35.0
LM5113TME/NOPB	DSBGA	YFX	12	250	210.0	185.0	35.0
LM5113TMX/NOPB	DSBGA	YFX	12	3000	210.0	185.0	35.0

DPR0010A

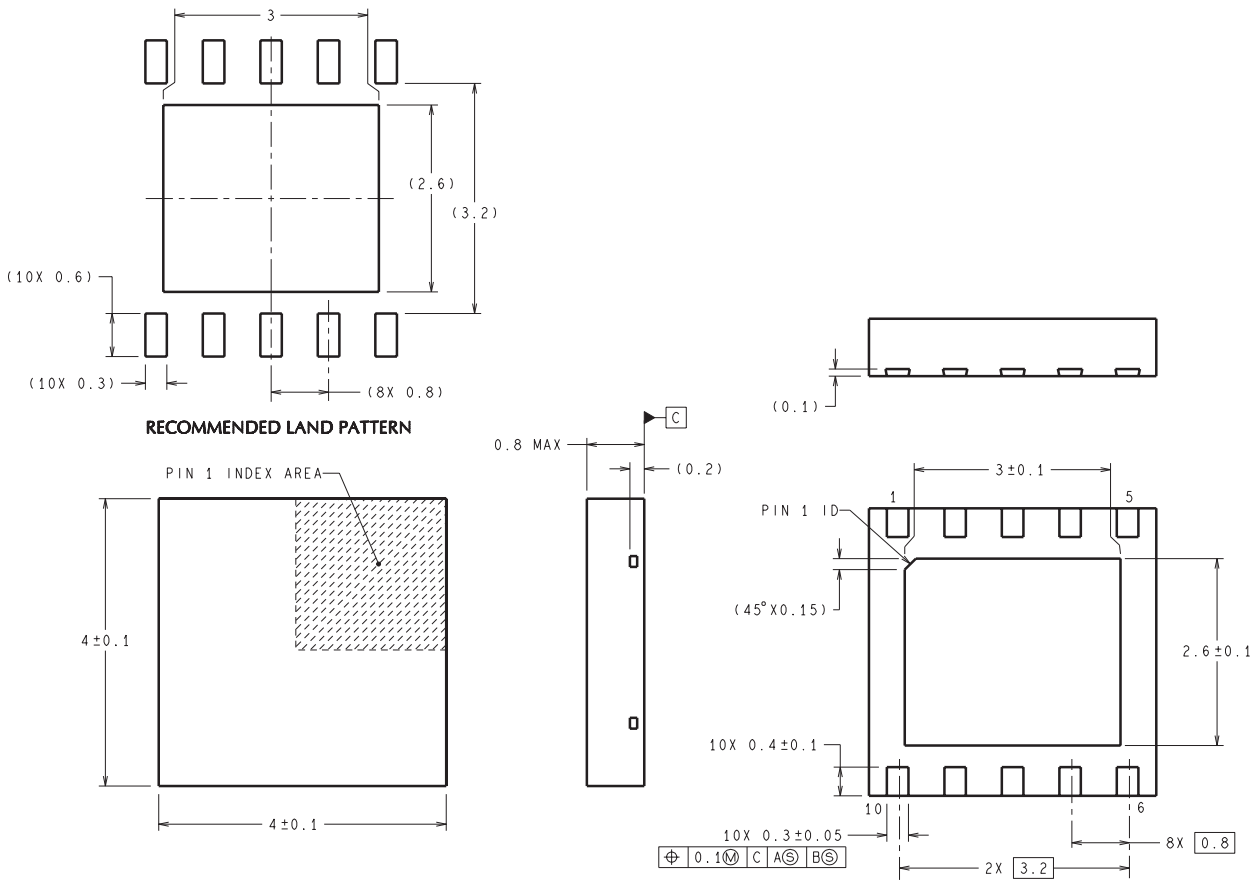

DIMENSIONS ARE IN MILLIMETERS

SDC10A (Rev A)

YFX0012

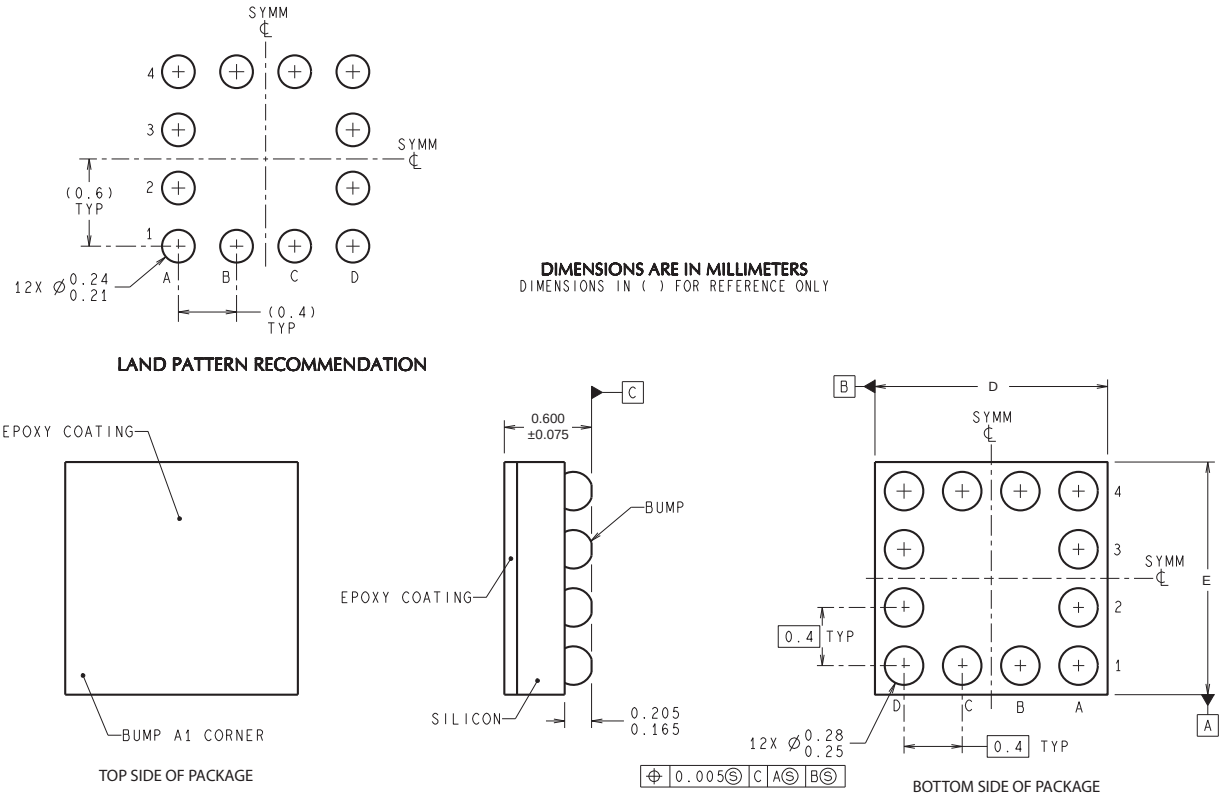

D: Max = 1.905 mm, Min =1.845 mm

E: Max = 1.756 mm, Min =1.695 mm

4215094/A 12/12

NOTES: A. All linear dimensions are in millimeters. Dimensioning and tolerancing per ASME Y14.5M-1994.
B. This drawing is subject to change without notice.

IMPORTANT NOTICE AND DISCLAIMER

TI PROVIDES TECHNICAL AND RELIABILITY DATA (INCLUDING DATASHEETS), DESIGN RESOURCES (INCLUDING REFERENCE DESIGNS), APPLICATION OR OTHER DESIGN ADVICE, WEB TOOLS, SAFETY INFORMATION, AND OTHER RESOURCES “AS IS” AND WITH ALL FAULTS, AND DISCLAIMS ALL WARRANTIES, EXPRESS AND IMPLIED, INCLUDING WITHOUT LIMITATION ANY IMPLIED WARRANTIES OF MERCHANTABILITY, FITNESS FOR A PARTICULAR PURPOSE OR NON-INFRINGEMENT OF THIRD PARTY INTELLECTUAL PROPERTY RIGHTS.

These resources are intended for skilled developers designing with TI products. You are solely responsible for (1) selecting the appropriate TI products for your application, (2) designing, validating and testing your application, and (3) ensuring your application meets applicable standards, and any other safety, security, or other requirements. These resources are subject to change without notice. TI grants you permission to use these resources only for development of an application that uses the TI products described in the resource. Other reproduction and display of these resources is prohibited. No license is granted to any other TI intellectual property right or to any third party intellectual property right. TI disclaims responsibility for, and you will fully indemnify TI and its representatives against, any claims, damages, costs, losses, and liabilities arising out of your use of these resources.

TI’s products are provided subject to TI’s Terms of Sale (www.ti.com/legal/termsofsale.html) or other applicable terms available either on ti.com or provided in conjunction with such TI products. TI’s provision of these resources does not expand or otherwise alter TI’s applicable warranties or warranty disclaimers for TI products.

Mailing Address: Texas Instruments, Post Office Box 655303, Dallas, Texas 75265
Copyright © 2020, Texas Instruments Incorporated