LM5034 High Voltage Dual Interleaved Current Mode Controller with Active Clamp

Check for Samples: LM5034

FEATURES

- **Two Independent PWM Current Mode Controllers**
- **Integrated High Voltage Startup Regulator**
- **Compound 2.5A Main Output Gate Drivers**
- **Single Resistor Oscillator Setting to 2 MHz**
- **Synchronizable Oscillator**
- **Active Clamp Gate Driver for P-Channel MOSFETs**
- **Adjustable Gate Drive Overlap Time**
- **Programmable Maximum Duty Cycle**
- **Maximum Duty Cycle Fold-Back at High Line Voltage**
- **Adjustable Timer for Hiccup Mode Current Limiting**
- **Integrated Slope Compensation**
- **Adjustable Line Under-Voltage Lockout**
- **Independently Adjustable Soft-Start (Each Regulator)**
- **Direct Interface with Opto-Coupler Transistor**
- **Thermal Shutdown**

APPLICATIONS

- **Telecommunication Power Converters**
- **Industrial Power Converters**
- **+42V Automotive Systems**

DESCRIPTION

The LM5034 dual current mode PWM controller contains all the features needed to control either two independent forward/active clamp dc/dc converters or a single high current converter comprised of two interleaved power stages. The two controller channels operate 180° out of phase thereby reducing input ripple current. The LM5034 includes a startup regulator that operates over a wide input range up to 100V and compound (bipolar + CMOS) gate drivers that provide a robust 2.5A peak sink current. The adjustable dead-time of the active clamp gate drivers and adjustable maximum PWM duty cycle reduce stress on the primary side MOSFET switches. Additional features include programmable line under-voltage lockout, cycle-by-cycle current limit, hiccup mode fault operation with adjustable restart delay, PWM slope compensation, soft-start, and a 2 MHz capable oscillator with synchronization capability.

PACKAGE

- TSSOP-20

Typical Application Circuit

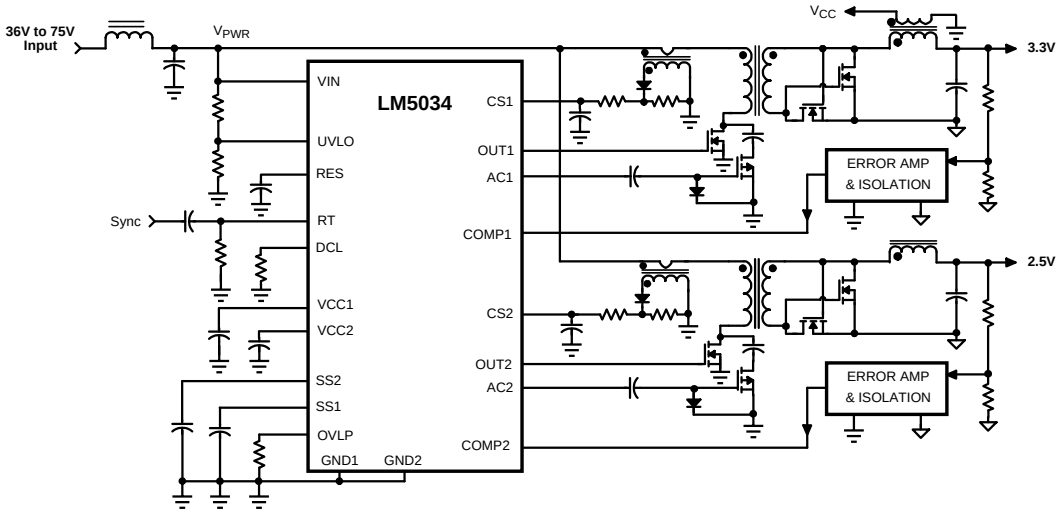

Figure 1. Dual Interleaved Regulators with Independent Outputs

Please be aware that an important notice concerning availability, standard warranty, and use in critical applications of Texas Instruments semiconductor products and disclaimers thereto appears at the end of this data sheet.

All trademarks are the property of their respective owners.

PRODUCTION DATA information is current as of publication date. Products conform to specifications per the terms of the Texas Instruments standard warranty. Production processing does not necessarily include testing of all parameters.

Copyright © 2005–2013, Texas Instruments Incorporated

Connection Diagram

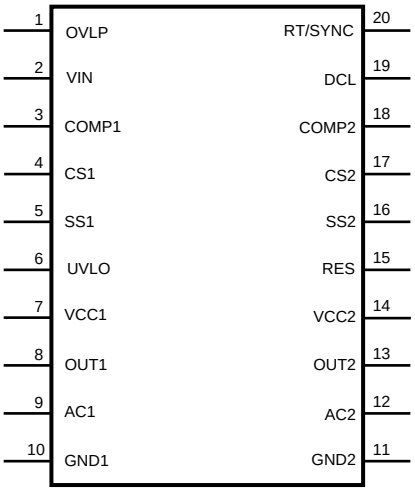

Figure 2. 20-Lead TSSOP Package – Top View
See Package Number PW

Copyright © 2005–2013, Texas Instruments Incorporated

PIN DESCRIPTIONS

PIN	NAME	DESCRIPTION	APPLICATIONS INFORMATION
1	OVLP	Active Clamp Overlap Adjust	An external resistor (10 kΩ to 100 kΩ) sets the overlap time of the active clamp outputs relative to the main outputs for both Controller 1 and Controller 2. The overlap time results in deadtime between each main switch and its active clamp switch.
2	VIN	Input Supply	Input to the startup regulator. The operating input range is 13V to 100V with transient capability to 105V.
3	COMP1	PWM Control, Controller 1	The COMP1 input provides voltage feedback to the PWM comparator inverting input of Controller 1 through a 3:1 divider. The OUT1 duty cycle increases as the COMP1 voltage increases. An internal 5KΩ pull-up resistor to +5.0V provides bias current to an opto-coupler transistor.
4	CS1	Current Sense Input, Controller 1	Input for current mode control and the current limit sensing. If the CS1 pin exceeds 0.5V the OUT1 pulse is terminated producing cycle-by-cycle current limiting. External resistance connected to CS1 will adjust (increase) PWM slope compensation. This pin's voltage must not exceed 1.25V.
5	SS1	Soft-start, Controller 1	An internal 50 µA current source charges an external capacitor to set the soft-start rate. During a current limit restart sequence, the internal current source is reduced to 1 µA to increase the delay before retry. Forcing SS1 below 0.5V shuts off Controller 1.
6	UVLO	VIN Under-Voltage Lockout	An external resistor divider sets the input voltage threshold to enable the LM5034. The UVLO comparator reference voltage is 1.25V. A switched 20 µA current source provides adjustable UVLO hysteresis. The UVLO pin voltage also controls the maximum duty cycle as described in the Functional Description section.
7	VCC1	Start-up regulator output, Controller 1	Output of the 7.7V high voltage start-up regulator for Controller 1. The sum of the currents drawn from VCC1 and VCC2 should not exceed 19 mA.
8	OUT1	Main Gate Driver, Controller 1	Gate driver output to the primary side switch for Controller 1. OUT1 swings between VCC1 and GND1 at a frequency equal to half the oscillator frequency.
9	AC1	Active Clamp Driver, Controller 1	Gate driver output to the active clamp P-channel MOSFET for Controller 1. The AC1 pulse overlaps the leading and trailing edges of the OUT1 pulse by an interval set by the OVLP pin resistor. The overlap produces deadtime between the main switch transistor and the P-channel active clamp transistor.
10	GND1	Ground, Controller 1	Ground connection for Controller 1 including gate drivers, PWM controller, soft-start and support functions.
11	GND2	Ground, Controller 2	Ground connection for Controller 2 including gate drivers, PWM controller and soft-start.
12	AC2	Active Clamp Driver, Controller 2	Gate driver output to the active clamp P-channel MOSFET for Controller 2. The AC2 pulse overlaps the leading and trailing edges of the OUT2 pulse by an interval set by the OVLP pin resistor. The overlap produces deadtime between the main switch transistor and the P-channel active clamp transistor.
13	OUT2	Main Gate Driver, Controller 2	Gate driver output to the primary side switch for Controller 2. OUT2 swings between VCC2 and GND2 at a frequency equal to half the oscillator frequency.
14	VCC2	Start-up regulator output, Controller 2	Output of the 7.7V high voltage start-up regulator for Controller 2. The sum of the currents drawn from VCC1 and VCC2 should not exceed 19 mA.
15	RES	Hiccup mode restart adjust	An external capacitor sets the time delay before forced restart during a sustained period of cycle-by-cycle current limiting. The hiccup mode comparator threshold is 2.55V.
16	SS2	Soft-start, Controller 2	An internal 50 µA current source charges an external capacitor to set the soft-start rate. During a current limit restart sequence, the internal current source is reduced to 1µA to increase the delay before retry. Forcing SS2 below 0.5V shuts off Controller 2.
17	CS2	Current Sense Input, Controller 2	Input for current mode control and the current limit sensing. If the CS2 pin exceeds 0.5V the OUT2 pulse is terminated producing cycle-by-cycle current limiting. External resistance connected to CS2 will adjust (increase) PWM slope compensation. This pin's voltage must not exceed 1.25V.
18	COMP2	PWM Control, Controller 2	The COMP2 input provides voltage feedback to the PWM comparator inverting input of Controller 2 through a 3:1 divider. The OUT2 duty cycle increases as the COMP2 voltage increases. An internal 5kΩ pull-up resistor to +5.0V provides bias current to the opto-coupler transistor.
19	DCL	Duty Cycle Limit	An external resistor sets the maximum allowed duty cycle at OUT1 and OUT2.
20	RT/SYNC	Oscillator Adjust and Synchronizing input	An external resistor sets the oscillator frequency. This pin also accepts ac-coupled synchronization pulses from an external source.

Copyright © 2005–2013, Texas Instruments Incorporated

Block Diagram

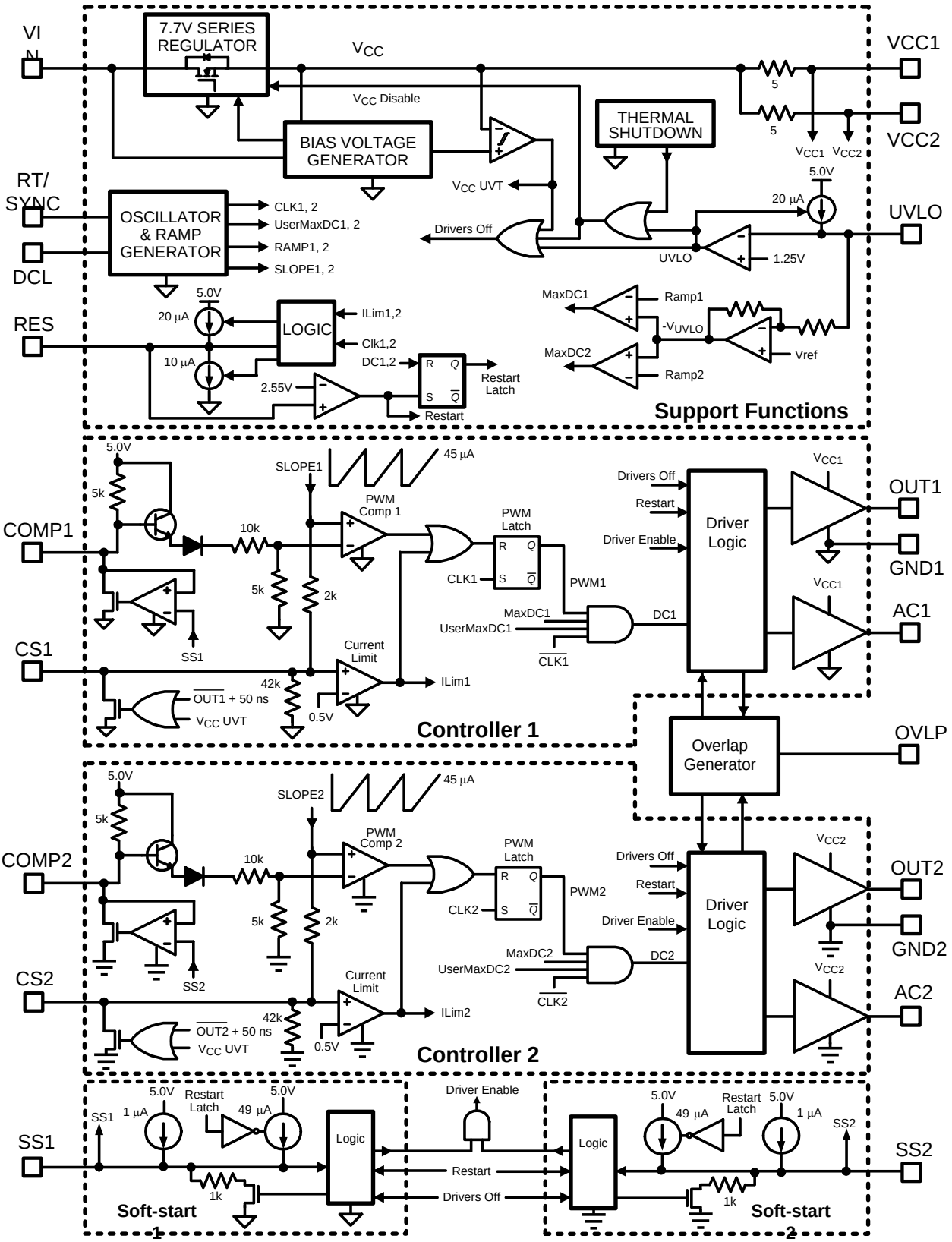

Figure 3. Detailed Block Diagram

Copyright © 2005–2013, Texas Instruments Incorporated

These devices have limited built-in ESD protection. The leads should be shorted together or the device placed in conductive foam during storage or handling to prevent electrostatic damage to the MOS gates.

Absolute Maximum Ratings(1)(2)

VIN to GND		-0.3V to 105V
VCC to GND		-0.3V to 16V
RT/SYNC, RES and DCL to GND		-0.3V to 5.5V
CS Pins to GND		-0.3V to 1.25V
All other inputs to GND		-0.3V to 7V
ESD Rating(3)	Human Body Model	2kV
Storage Temperature Range		-55°C to 150°C
Junction Temperature		150°C
Lead Temperature (Soldering 4 sec),(4)		260°C

(1) Absolute Maximum Ratings are limits beyond which damage to the device may occur. Operating Ratings are conditions under which operation of the device is intended to be functional. For specifications and test conditions, see the Electrical Characteristics.
(2) If Military/Aerospace specified devices are required, please contact the Texas Instruments Sales Office/Distributors for availability and specifications.
(3) The human body model is a 100 pF capacitor discharged through a 1.5 kΩ resistor into each pin.
(4) For detailed information on soldering plastic TSSOP packages, refer to the Packaging Data Book available from Texas Instruments.

Operating Ratings(1)

VIN Voltage	13.0V to 100V
External Voltage Applied to VCC1, VCC2	8V to 15V
Operating Junction Temperature	-40°C to +125°C

(1) Absolute Maximum Ratings are limits beyond which damage to the device may occur. Operating Ratings are conditions under which operation of the device is intended to be functional. For specifications and test conditions, see the Electrical Characteristics.

Copyright © 2005–2013, Texas Instruments Incorporated

Electrical Characteristics

Specifications with standard typeface are for T_J = 25°C, and those with **boldface** type apply over full **Operating Junction Temperature range**. VIN = 48V, VCC1 = VCC2 = 10V externally applied, R_T = R_{DCL} = 42.2kΩ, R_{OVLP} =70kΩ, UVLO = 1.5V, unless otherwise stated. See(1) and (2).

Symbol	Parameter	Conditions	Min	Typ	Max	Units
Startup Regulator (VIN, VCC1, VCC2 Pins)						
V_{CC}Reg	V_{CC} voltage	VCC1 connected to VCC2, ext. supply disconnected.	**7.4**	7.7	**8**	V
$I_{CC(Lim)}$	V_{CC} current limit	Sum of currents out of VCC1 and VCC2 with VCC1 = VCC2 = 0V.	**19**	22		mA
V_{CC} UVT	V_{CC} Under-voltage threshold (V_{CC} increasing)	VCC1 connected to VCC2, ext. supply disconnected, VIN =11V.	**VCC - 300 mV**	VCC - 100 mV		V
	V_{CC} decreasing		**5.5**	6.2	**6.9**	V
I_{IN}	Startup regulator current	VIN = 90V, UVLO = 0V		500	**600**	µA
I_{CC}In	Supply current into VCC from external source	Output loads = open, V_{CC} = 10V		4.3	**7**	mA
UVLO						
UVLO	Under-voltage threshold		**1.22**	1.25	**1.28**	V
I_{HYST}	Hysteresis current		**16**	20	**24**	µA
Current Sense Input (CS1, CS2 Pins)						
CS	Current Limit Threshold		**0.45**	0.5	**0.55**	V
	CS delay to output	CS1 (CS2) taken from zero to 1.0V. Time for OUT1 (OUT2) to fall to 90% of VCC1 (VCC2). Output load = 0 pF.		40		ns
	Leading edge blanking time at CS1 (CS2)			50		ns
	CS1 (CS2) sink impedance (clocked)	Internal pull-down FET on.		30	**55**	Ω
R_{CS}	Equivalent input resistance at CS	CS taken from 0.2V to 0.5V, internal FET off.		42		kΩ
Current Limit Restart (RES Pin)						
ResTh	Threshold		**2.4**	2.55	**2.7**	V
	Charge source current		**15**	20	**25**	µA
	Discharge sink current		**7.5**	10	**12.5**	µA
Soft-start (SS1, SS2 Pins)						
I_{SS}	Current source (normal operation)		**35**	50	**65**	µA
	Current source during a current limit restart		**0.7**	1	**1.3**	µA
V_{SS}	Open circuit voltage			5		V
Oscillator (RT/SYNC Pin)						
F_{S1}	Frequency 1 (at OUT1, OUT2)	R_T = 42.2 kΩ	**183**	200	**217**	kHz
F_{S2}	Frequency 2 (at OUT1, OUT2)	R_T = 13.7 kΩ	**530**	600	**670**	kHz
	DC voltage			2		V
	Input Sync threshold		**2.6**	3.3	**3.7**	V
PWM Controller (COMP1, COMP2, Duty Cycle Limit Pins)						
	Delay to output	COMP1 (COMP2) set to 2V. CS1 (CS2) stepped from 0 to 0.4V. Time for OUT1 (OUT2) to fall to 90% of VCC1 (VCC2). Output load = 0 pF.		50		ns
V_{COMP}	COMP1 (COMP2) open circuit voltage			5		V

(1) All electrical characteristics having room temperature limits are tested during production with T_A = 25°C. All hot and cold limits are specified by correlating the electrical characteristics to process and temperature variations and applying statistical process control.
(2) Typical specifications represent the most likely parametric norm at 25°C operation

Copyright © 2005–2013, Texas Instruments Incorporated

Electrical Characteristics (continued)

Specifications with standard typeface are for T_J = 25°C, and those with **boldface** type apply over full **Operating Junction Temperature range**. VIN = 48V, VCC1 = VCC2 = 10V externally applied, R_T = R_{DCL} = 42.2kΩ, R_{OVLP} =70kΩ, UVLO = 1.5V, unless otherwise stated. See(1) and (2).

Symbol	Parameter	Conditions	Min	Typ	Max	Units
I_{COMP}	COMP1 (COMP2) short circuit current	COMP1 (COMP2) = 0V	**0.6**	1	**1.4**	mA
	COMP1 (COMP2) to PWM1 (PWM2) gain			0.33		V/V
	Minimum duty cycle	SS1 (SS2) = 0V			**0**	%
	Maximum duty cycle 1	UVLO pin = 1.30V, R_{DCL} = R_T, COMP1 (COMP2) = open		76		%
	Maximum duty cycle 2	UVLO pin = 3.75V, R_{DCL} = R_T, COMP1 (COMP2) = open		20		%
	Maximum duty cycle 3	UVLO pin = 1.30V, R_{DCL} = R_T/4, COMP1 (COMP2) = open		20		%
	Maximum duty cycle 4	UVLO pin = 2.50V, R_{DCL} = R_T, COMP1 (COMP2) = open		50		%
	Maximum duty cycle 5	UVLO pin = 1.30V, R_{DCL} = R_T/2, COMP1 (COMP2) = open		40		%
	Slope compensation	Delta increase at PWM comparator to CS1 (CS2)		90		mV
	Channel mismatch	CS1 (CS2) = 0.25V			**7**	%
	Soft-start to COMP offset	SS1 (SS2) = 0.8V		0		V
Main Output Drivers (OUT1, OUT2)						
	Output high voltage	I_{OUT} = 50mA (source)	**VCC-1**	VCC-0.2		V
	Output low voltage	I_{OUT} = 100 mA (sink)		0.3	**1**	V
	Rise time	C_{LOAD} = 1 nF		12		ns
	Fall time	C_{LOAD} = 1 nF		10		ns
	Peak source current			1.5		A
	Peak sink current			2.5		A
Active Clamp Output Drivers (AC1, AC2)						
	Output high voltage	I_{OUT} = 10mA (source)	**VCC-0.5**	VCC-0.2		V
	Output low voltage	I_{OUT} = 20 mA (sink)		0.1	**0.5**	V
	Rise time	C_{LOAD} = 1.0 nF		44		ns
	Fall time	C_{LOAD} = 1.0 nF		22		ns
	Peak source current			0.1		A
	Peak sink current			0.25		A
	Overlap time	R_{OVLP} = 70 kΩ	**75**	100	**125**	ns
Thermal Shutdown						
T_{SD}	Shutdown temperature			165		°C
	Hysteresis			20		°C
Thermal Resistance						
θ_{JA}	Junction to ambient, 0 LFPM Air Flow	TSSOP-20 package		120		°C/W

Copyright © 2005–2013, Texas Instruments Incorporated

TEST CIRCUIT DIAGRAMS

Timing Diagram

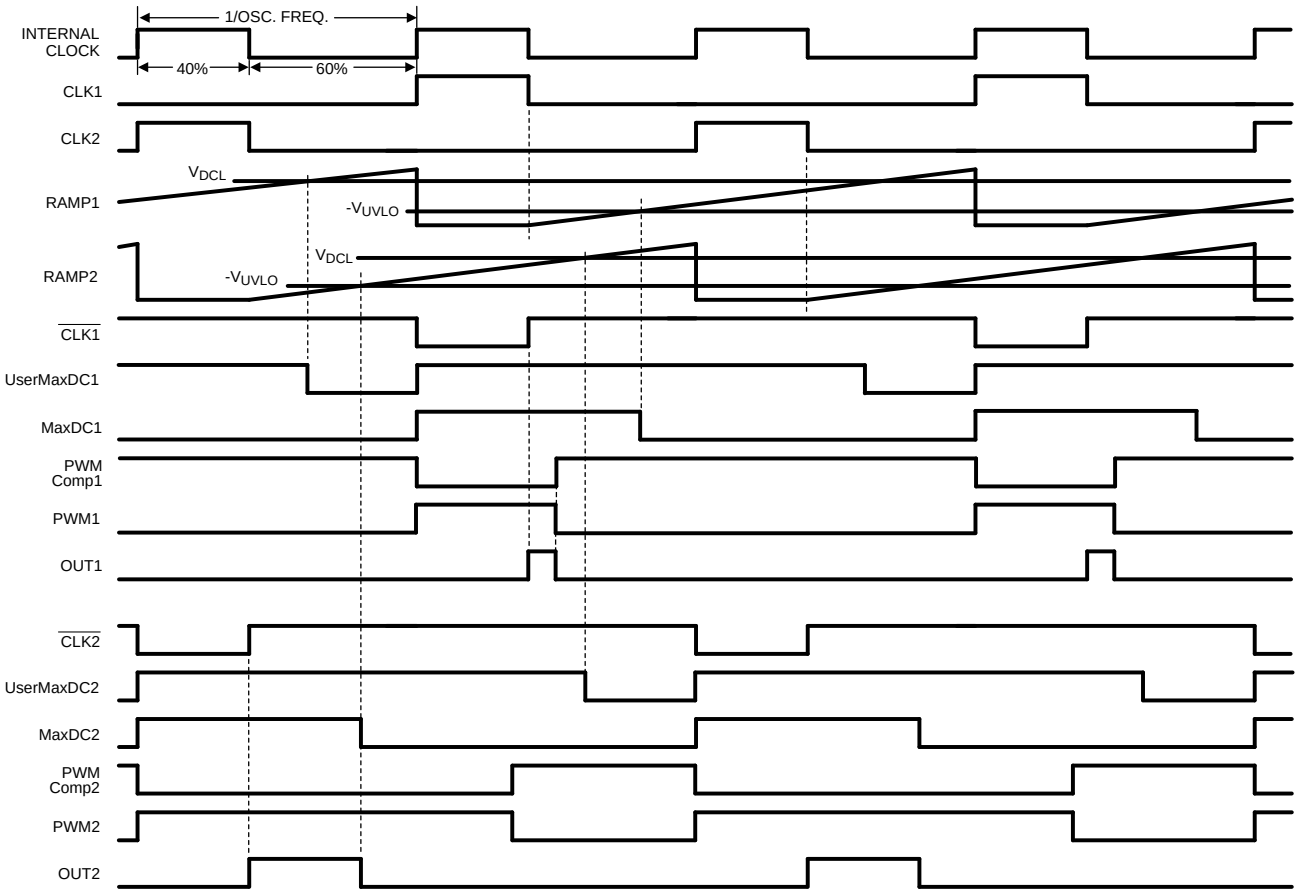

Figure 4. Internal Timing Diagram

Copyright © 2005–2013, Texas Instruments Incorporated

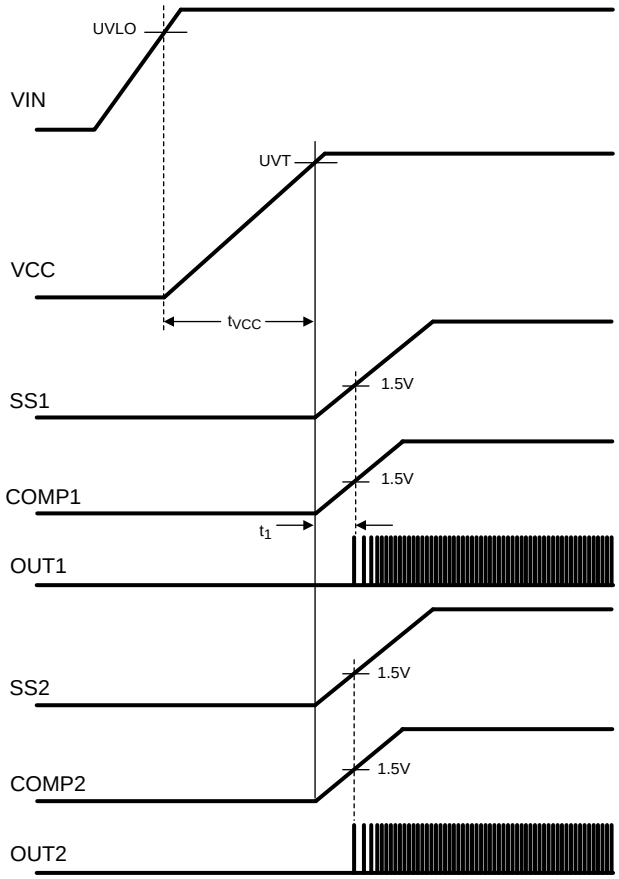

Figure 5. Startup Sequence

Typical Performance Characteristics

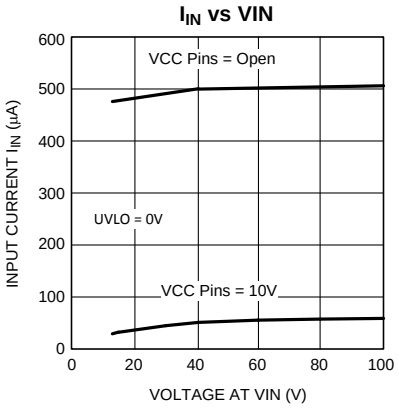

Figure 6.

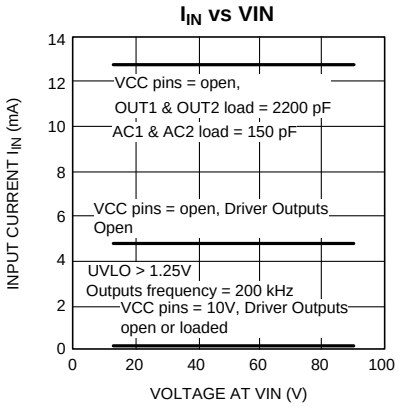

Figure 7.

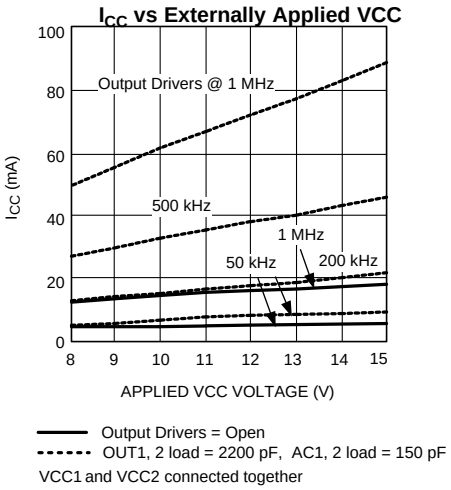

Figure 8.

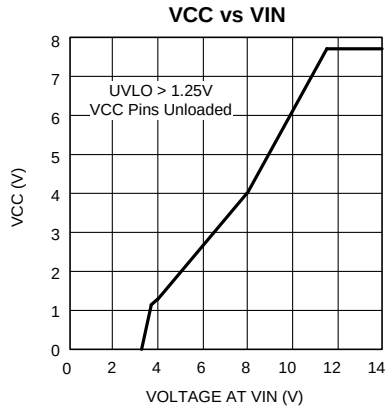

Figure 9.

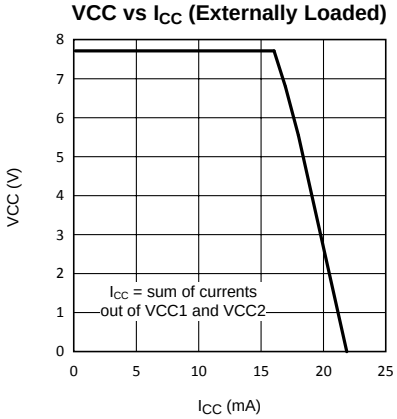

Figure 10.

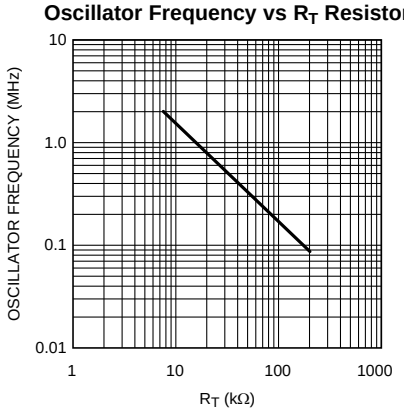

Figure 11.

Copyright © 2005–2013, Texas Instruments Incorporated

Typical Performance Characteristics (continued)

User Defined Maximum Duty Cycle vs. R_{DCL} Resistor

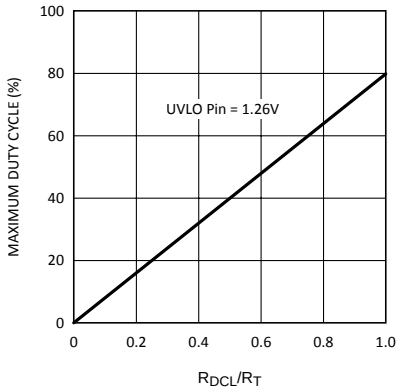

Figure 12.

Maximum Duty Cycle vs. UVLO Voltage

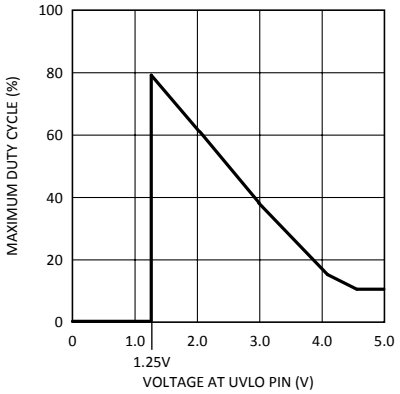

Figure 13.

Maximum Duty Cycle vs. VIN (Figure 31)

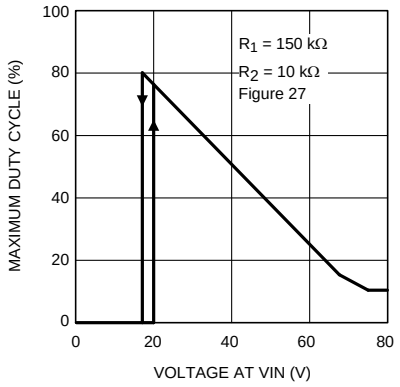

Figure 14.

Active Clamp Overlap Time vs. R_{OVLP}

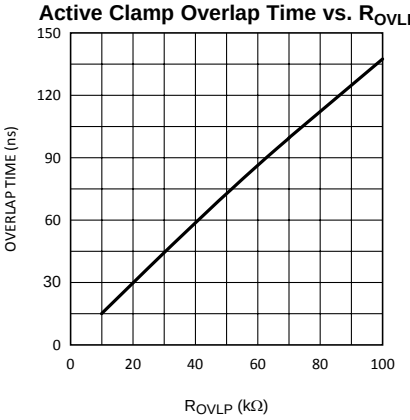

Figure 15.

Frequency vs. Temperature

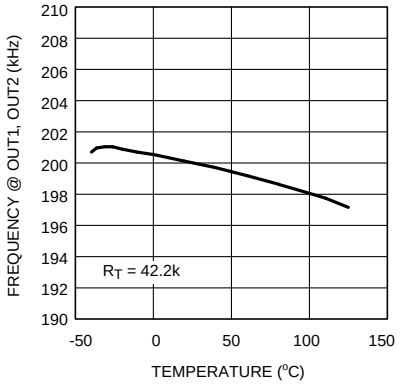

Figure 16.

Overlap Time vs. Temperature

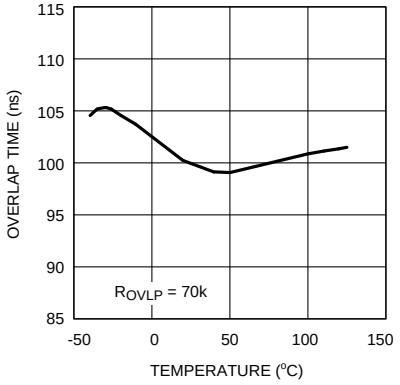

Figure 17.

Typical Performance Characteristics (continued)

Soft-start Pin Current vs. Temperature

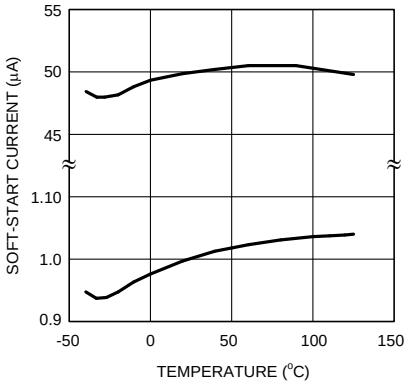

Figure 18.

Current Limit Threshold at CS1, CS2 vs. Temperature

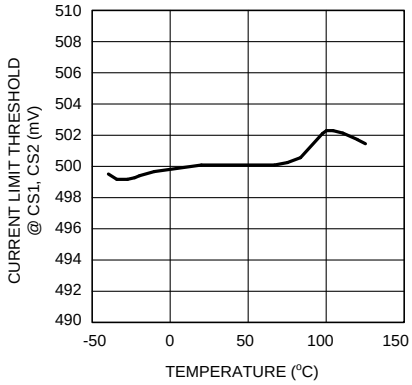

Figure 19.

FUNCTIONAL DESCRIPTION

The LM5034 contains all the features necessary to implement two independently regulated current mode dc/dc converters, or a single high current converter comprised of two parallel interleaved channels using the Forward/ Active Clamp topology. The two controllers operate 180° out of phase from a common oscillator, thereby reducing input ripple current. Each regulator channel contains a complete PWM controller, current sense input, soft-start circuit, main gate driver output, and active clamp driver output. Common to both channels are the startup and V_{CC} regulators, line under-voltage lockout, 2 MHz capable oscillator, maximum duty cycle control, overlap time setting, and the hiccup mode fault protection circuit.

The main gate driver outputs (OUT1, OUT2) are designed to drive N-channel MOSFETs. Their compound configuration reduces the turn-off-time, thereby reducing switching losses. The active clamp outputs (AC1, AC2) are designed to drive P-channel MOSFETs. The adjustable overlap time of the active clamp outputs relative to the main outputs produces a deadtime between the main switch and the P-channel active clamp switch. Additional features include thermal shutdown, slope compensation, and the oscillator synchronization capability.

Line Under-Voltage Lock Out, UVLO, Shutdown

The LM5034 contains a line under-voltage lockout circuit (UVLO) designed to enable the V_{CC} regulator and output drivers when the system voltage (V_{PWR}) exceeds the desired level (see Figure 20). V_{PWR} is the voltage normally applied to the transformer primary, and usually connected to the VIN pin (see the schematic on Page 1). The threshold at the UVLO comparator is 1.25V. An external resistor divider connected from V_{PWR} to ground provides 1.25V at the UVLO pin when V_{PWR} is increased to the desired turn-on threshold. When V_{PWR} is below the threshold the V_{CC} regulator and output drivers are disabled, and the internal 20 µA current source is off. When V_{PWR} reaches the threshold, the comparator output switches low to enable the internal circuits and the 20 µA current source. The 20 µA flows into the external divider's junction, raising the voltage at UVLO, thereby providing hysteresis. Internally the voltage at UVLO also drives the Maximum Duty Cycle Limiter circuit (described below), which may influence the values chosen for the UVLO pin resistors. At maximum V_{PWR}, the voltage at UVLO should not exceed 6V. Refer to Applications Information for a procedure to calculate the resistors values.

The LM5034 controllers can be shutdown by forcing the UVLO pin below 1.25V with an external switch. When the UVLO pin is low, the outputs and the V_{CC} regulator are disabled, and the LM5034 enters a low power mode. If the VCC pins are not powered from an external source, the current into VIN drops to a nominal 500 µA. If the VCC pins are powered from an external source, the current into VIN is nominally 50 µA, and the current into the VCC pins is approximately 4.3 mA. To disable one regulator without affecting the other, see the description of the Soft-start section.

Copyright © 2005–2013, Texas Instruments Incorporated

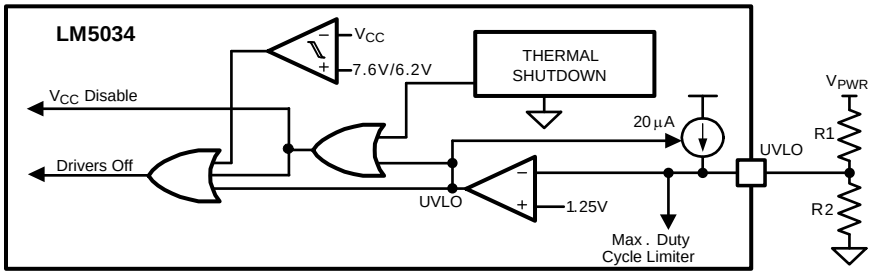

Figure 20. Drivers Off and V_{CC} Disable

Startup Regulator, VIN, VCC1, VCC2

The high voltage startup regulator is integral to the LM5034. The input pin VIN can be connected directly to a voltage between 13V and 100V, with transient capability to 105V. The startup regulator provides bias voltages to the series pass V_{CC} regulator and the UVLO circuit. The V_{CC} regulator is disabled until the voltage at the UVLO pin (described above) exceeds 1.25V. For applications where V_{PWR} exceeds 100V the internal startup regulator can be powered from an external startup regulator or other available low voltage source. See Applications Information for details.

The V_{CC} under-voltage threshold circuit (UVT) monitors the VCC regulator output. When the series pass regulator is enabled and the internal V_{CC} voltage increases to > 7.6V, the UVT comparator activates the PWM controller and output drivers via the Drivers Off signal. The UVT comparator has built-in hysteresis, with the lower threshold nominally set to 6.2V. See Figure 5 and Figure 20.

When enabled, the V_{CC} regulated output is 7.7V ±4% with current limited to a minimum of 19 mA (typically 22 mA). The regulator's output is split by a resistor divider to provide separate VCC1 and VCC2 rails for the two controller channels. VCC1 powers Controller 1, drivers OUT1 and AC1, Soft-start1, and all the support functions. VCC2 powers Controller 2, drivers OUT2 and AC2, and Soft-start2. If VCC1 and/or VCC2 are used to power external circuitry, the current limit specification applies to the sum of the load currents at the two pins.

Splitting the V_{CC} regulator output through two 5Ω resistors allows separate external V_{CC} bypass capacitors to reduce cross-talk between channels. Each VCC output pin requires a capacitor to its corresponding ground for stability, as well as to provide the surge currents to the external MOSFETs via the gate driver outputs. The capacitors should be the same value, and be physically close to their respective pins.

In most applications it is necessary to power V_{CC} from an external source as the average current required at the output drivers may exceed the current capability of the internal regulator and/or the thermal capability of the LM5034 package (see Figure 8). Normally the external source is derived from the converter's power stage once the LM5034 outputs are active. See Applications Information for more information.

Drivers Off, V_{CC} Disable

Referring to Figure 20, Drivers Off and V_{CC} Disable are internal signals which, when active disable portions of the LM5034. If the UVLO pin is below 1.25V, or if the thermal shutdown activates, the V_{CC} Disable line switches high to disable the V_{CC} regulator. UVLO also activates the Drivers Off signal to disable the output drivers, connect the SS1, SS2, COMP1, COMP2 and RES pins to ground, and enable the 50 µA Soft-start current sources.

If the V_{CC} voltage falls below the under-voltage threshold of 6.2V , the UVT comparator activates only the Drivers Off signal. The output drivers are disabled but the V_{CC} regulator is not disabled. Additionally, the CS1, CS2, SS1, SS2, COMP1, COMP2 and RES pins are internally grounded, and the 50 µA Soft-start current sources are enabled.

Copyright © 2005–2013, Texas Instruments Incorporated

Oscillator

The oscillator frequency is set with an external resistor R_T connected between the RT/SYNC and GND1 pins. The resistor value is calculated from:

$$R_T = \frac{17100}{F_S} - 0.001(F_S - 400) \quad (1)$$

where F_S is the desired oscillator frequency in kHz (maximum of 2 MHz), and R_T is in kΩ. See Figure 11. The two gate driver outputs (OUT1 and OUT2) switch at half the oscillator frequency and 180° out of phase with each other. The voltage at the R_T/SYNC pin is internally regulated at 2.0V. The R_T resistor should be located as close as possible to the LM5034 with short direct connections to the pins.

The LM5034 can be synchronized to an external clock by applying a narrow clock pulse to the R_T/SYNC pin. See Applications Information for details on this procedure. The R_T resistor is always required, whether the oscillator is free running or externally synchronized.

PWM Comparator/Slope Compensation

The PWM comparator of each controller compares a slope compensated current ramp signal with the loop error voltage derived from the COMP pin. The COMP voltage is typically controlled by an external error amplifier/optocoupler feedback circuit to regulate the converter output voltage. Internally, the voltage at the COMP pin passes through two level shifting diodes and a gain reducing 3:1 resistor divider (see Figure 21). The compensated current ramp signal is a combination of the current waveform at the CS pin, and an internally generated ramp derived from the internal clock. At duty cycles greater than 50% current mode control circuits are prone to subharmonic oscillation. By adding a small fixed ramp to the external current sense signal oscillations can be avoided. The internal ramp has an amplitude of 45 µA and is sourced into an internal 2kΩ resistor, and a 42 kΩ resistor in parallel with the external impedance at the CS pin. The ramp current also flows through the external impedance connected to the CS pin and thus, the amount of slope compensation can be adjusted by varying the external circuit at the CS pin.

The output of the PWM comparator provides the pulse width information to the output drivers. This comparator is optimized for speed in order to achieve minimum controllable duty cycles. The comparator's output duty cycle is 0% for V_{COMP} ≤1.5V, and increases as V_{COMP} increases.

If either Soft-start pin is pulled low (internally or externally) the corresponding COMP pin is pulled down with it, forcing the output duty cycle to zero. When the Soft-start pin voltage increases, the COMP pin is allowed to increase. An internal 5 kΩ resistor connected from COMP to an internal 5.0V supply provides a pull-up for the COMP pin and bias current to the collector of the opto-coupler transistor.

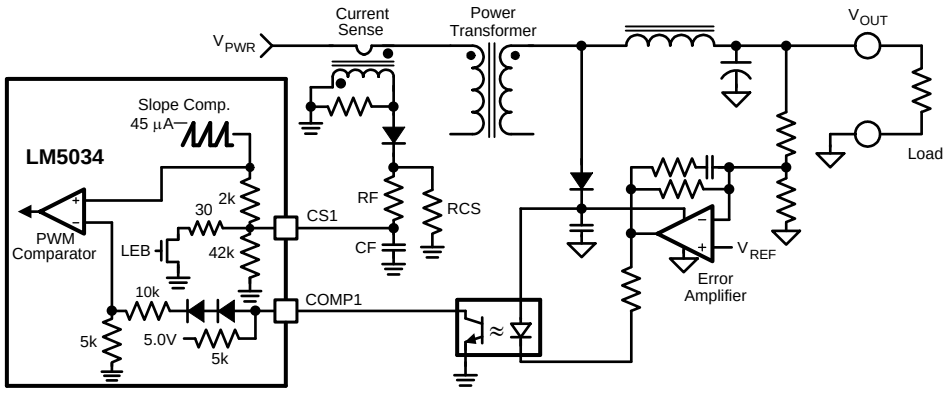

Figure 21. Typical Feedback Network

Copyright © 2005–2013, Texas Instruments Incorporated

Cycle-by-Cycle Current Limit

Each CS pin is designed to accept a signal representative of its transformer primary current. If the voltage at CS exceeds 0.5V the current sense comparator terminates the present main output driver (OUT pin) pulse. If the high current fault persists, the controller operates with constant peak switch current in a cycle-by-cycle current limit mode, and a Hiccup Mode Current Limit Restart cycle begins (see below).

Each CS pin is internally connect to ground through a 30Ω resistor during the main output off time to discharge external filter capacitance. The discharge device remains on for an additional 50 ns after the main output driver switches high to blank leading edge transients in the current sensing circuit. Discharging the CS pin filter each cycle and blanking leading edge spikes reduces the filter requirement which improves the current sense response time.

The current sense comparators are fast and respond to short duration noise pulses. The external circuitry at each CS pin should include an R-C filter to suppress noise. Layout considerations are critical for the current sense filter and the sense resistor. See Applications Information for PC board layout guidelines.

Hiccup Mode Current Limit Restart

If cycle-by-cycle current limiting continues in either or both controllers for a sufficient period of time, the Current Limit Restart circuit disables both regulators and initiates a soft-start sequence after a programmable delay. The duration of cycle-by-cycle current limiting before turn-off occurs is programmed by the value of the external capacitor at the RES pin. The dwell time before output switching resumes is programmed by the value of the Soft-start capacitor(s). The circuit is detailed in Figure 22 and the timing is shown in Figure 23. A description of this circuit's operation is as follows:

a) No current limit detected:

The 10 µA discharge current source at RES is enabled pulling the RES pin to ground.

b) Current limit repeatedly detected at both CS inputs:

The 20 µA current source at RES is enabled continuously to charge the RES pin capacitor as shown in Figure 23. The current limit comparators also terminate the PWM output pulses to provide a cycle-by-cycle current limiting. When the voltage on the RES capacitor reaches the 2.55V restart comparator threshold, the comparator sets the Restart Latch which produces the following restart sequence:

- The SS1 and SS2 pin charging currents are reduced from 50µA to 1 µA,
- An internal MOSFET is turned on to discharge the RES pin capacitor.
- The internal MOSFETs at SS1 and SS2 are turned on to discharge the Soft-start capacitors.
- COMP1 and COMP2 follow SS1 and SS2 respectively and reduce the PWM duty cycles to zero
- When the voltages at the SS pins fall below 200mV, the internal MOSFETs at the SS pins are turned off allowing the SS pins to be charged by the 1µA current sources.
- When either SS pin reaches ≅1.5V its PWM controller produces the first pulse of a soft-start sequence which resets the Restart Latch. The SS charging currents are increased to 50 µA and the soft-start sequence continues at the normal rate.

If the overload condition still exists, the voltage at RES begins to increase again and repeat the restart cycle as shown in Figure 23. If the overload condition has been cleared, the RES pin is held at ground by the 10 µA current source.

c) Current limit repeatedly detected at one of the two CS inputs:

In this condition the RES pin capacitor is charged by the 20 µA current source once each clock cycle of the current limited regulator (CLK1 or CLK2), and discharged by the 10 µA current source once each clock cycle of the unaffected regulator. The voltage at the RES pin increases one fourth as fast as in case b) described above. The current limited regulator operates in a cycle-by-cycle current limit mode until the voltage at RES reaches the 2.55V threshold. When the Restart Comparator output switches high the Restart Latch is set, both SS pin capacitors are discharged to disable the regulator channels, and a restart sequence begins as described in case b) above.

To determine the value of the RES pin capacitor, see Applications Information.

Copyright © 2005–2013, Texas Instruments Incorporated

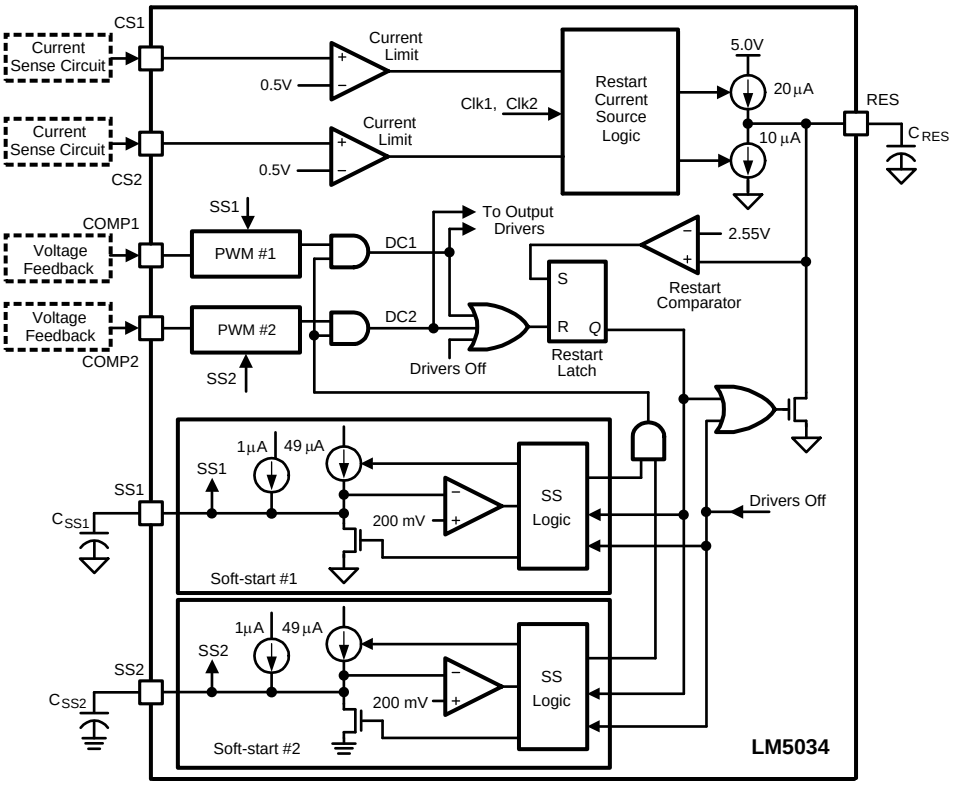

Figure 22. Current Limit Restart Circuit

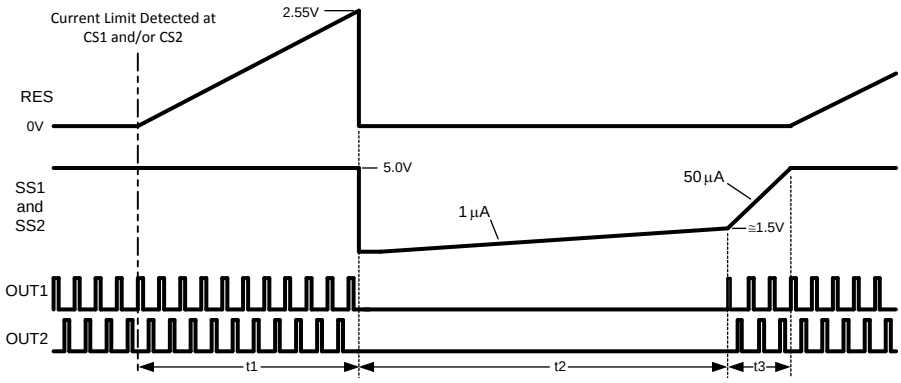

Figure 23. Current Limit Restart Timing

Soft-Start

Each soft-start circuit allows the corresponding regulator to gradually reach a steady state operating point, thereby reducing startup current surges and output overshoot. Upon turn-on, both SS pins are internally held at ground. When VCC increases past its under-voltage threshold (UVT), the SS pins are released and internal 50 µA current sources charge the external capacitors. The voltage at each COMP pin follows the SS pin, and when COMP reaches ≅1.5V, the output pulses commence at a low duty cycle. The voltage at the SS pins continues to increase and saturates at ≅5.0V, The voltage at each COMP pin increases to the value required for regulation where it is controlled by its voltage feedback loop (see Figure 5).

Copyright © 2005–2013, Texas Instruments Incorporated

If the internal Drivers Off line is activated (see Drivers Off, V_{CC} Disable), both SS pins are internally grounded. The SS pins pull the COMP pins to ground while the Driver Off signal disables the output drivers. When the event which activated the Drivers Off line is cleared and Vcc exceeds its under-voltage threshold, the SS pins are released. The internal 50 µA current sources then charge the external soft-start capacitors allowing each regulator's output duty cycle to increase.

If the Current Limit Restart threshold is reached due to repeated over-current detections, both SS pins (and the COMP pins) are pulled to ground. The output drivers are disabled, and the 50 µA SS pin current sources are reduced to 1 µA. After a short propagation delay the SS pins and the COMP pins are released, and the external capacitors are charged up at a slow rate. When the COMP voltage reaches ≅ 1.5V, the output drivers are enabled, and the current sources at the SS pins are increased to 50 µA. The output duty cycle then increases to the value required for regulation.

To shutdown one regulator without affecting the other, ground the appropriate SS pin. This forces the COMP pin to ground, reducing the output duty cycle to zero for that regulator. Releasing the SS pin allows normal operation to resume.

Output Duty Cycle

The output driver's duty cycle for each controller is normally controlled by comparing the voltage provided to the COMP input by the external voltage feedback circuit with the current information at the CS pin. However, the maximum duty cycle during transient or fault conditions may be intentionally limited by two other circuits, both of which are common to the two controller channels.

User Defined Maximum Duty Cycle. The maximum allowed duty cycle can be set with the R_{DCL} resistor connected from the DCL pin to GND1, according to the following equation:

$$\text{Maximum User Duty Cycle} = 80\% \times R_{DCL}/R_T \quad (2)$$

R_T is the oscillator frequency programming resistor connected to the R_T/SYNC pin. The value of the R_{DCL} resistor must be calculated after the R_T resistor is selected. See Figure 12. Referring to the block diagrams of Figure 3, and Figure 4, the voltage at the DCL pin (V_{DCL}) is compared to the Ramp1 and Ramp2 signals, creating the UserMaxDC1 and UserMaxDC2 timing signals. These signal are provided to the two 4-input AND gates to limit the PWM duty cycle of both channels.

Line Voltage Maximum Duty Cycle. The voltage at the UVLO pin, normally proportional to the voltage at V_{PWR}, further limits the maximum duty cycle at high input voltages. Referring to Figure 13, when the UVLO pin is below 1.25V, the outputs are disabled. At UVLO = 1.25V the maximum allowed duty cycle is 80% (or less if limited by the DCL resistor). As the UVLO pin voltage increases with V_{PWR}, the maximum duty cycle decreases, reaching a minimum of 10% at ≅4.5V. Referring to Figure 3 and Figure 4, the UVLO voltage, after passing through an inverting gain stage, is compared to the Ramp1 and Ramp2 signals generated by the oscillator. The output of these comparators are the MaxDC1 and MaxDC2 timing signals. These signals are provided to the two 4-input AND gates which limit the PWM pulses delivered to the output drivers.

Resulting Output Duty Cycle. The controller duty cycle is determined by the four signals into the 4-input AND gates in Figure 3 (UserMaxDC, MaxDC, PWM and CLK). The output driver pulsewidth is equal to the least of these four pulses. Whichever input of the AND gate transitions high-to-low first terminates the output driver's on-time. For example, in Figure 4, the OUT1 driver's on-time is set by PWM Comparator #1. The on-time for OUT2 is limited by the UVLO pin voltage (determined by V_{PWR}) even though the PWM Comparator #2 is seeking a higher duty cycle.

Driver Outputs

OUT1, the primary switch driver for Controller 1 is designed to drive the gate of an N-channel MOSFET with 1.5A sourcing current and 2.5A sinking current. The corresponding active clamp driver, AC1, is designed to drive a P-channel MOSFET and is capable of sourcing 100 mA and sinking 250 mA. The peak output levels at OUT1 and AC1 are VCC1 and GND1. The ground return path for Controller 1 is GND1. The corresponding driver pins for Controller 2 are OUT2, AC2, VCC2 and GND2.

Copyright © 2005–2013, Texas Instruments Incorporated

OUT1 and OUT2 are compound gate drivers with CMOS and Bipolar output transistors as shown in Figure 24. The parallel MOS and Bipolar devices provide a faster turn-off of the primary switch thereby reducing switching losses. The outputs switch at one-half the oscillator frequency with the rising edges at OUT1 and OUT2 180° out of phase with each other. The on-time of OUT1 and OUT2 is determined by their respective duty cycle control. The active clamp outputs are in phase with their respective main outputs, with their edge timing altered by the overlap control circuit as shown in Figure 25. The overlap time provides deadtime between the operation of the primary switch and the active clamp switch at both the rising and falling edges. The overlap times are the same at the rising and falling edges, independent of frequency and duty cycle. The overlap time is programmed by the resistor at the OVLP pin (R_{OVLP}) according to the following equation (see Figure 15 and Figure 17):

$$t_{OVLP} = (1.25 \times R_{OVLP}) + 5 \quad (3)$$

where R_{OVLP} is in kΩ, and t_{OVLP} is in ns. The range for R_{OVLP} is 10 kΩ to 100 kΩ. If the application requires zero overlap time, the OVLP pin should be left open.

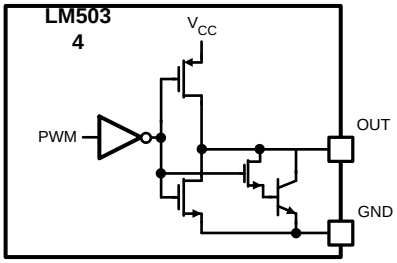

Figure 24. Compound Gate Driver

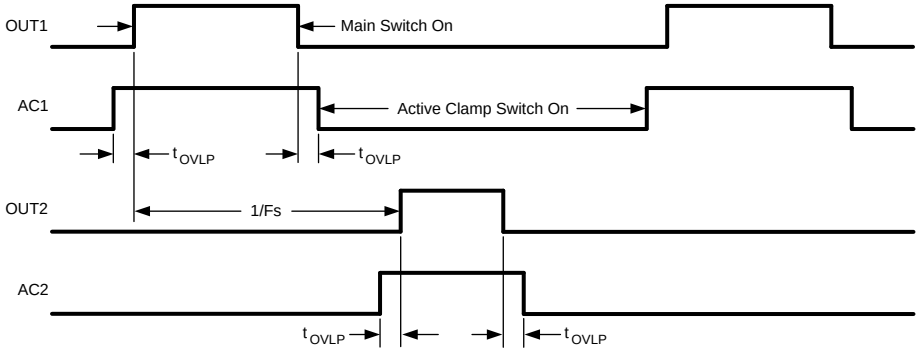

Figure 25. Output Overlap Timing

Thermal Shutdown

The LM5034 should be operated so the junction temperature does not exceed 125°C. If a junction temperature transient reaches 165°C (typical), the Thermal Shutdown circuit activates the V_{CC} Disable and Drivers Off lines (see Figure 20). The V_{CC} regulator and the four output drivers are disabled, the SS1, SS2, and RES pins are grounded, and the soft-start current is set to 50 µA. This puts the LM5034 in a low power state helping to prevent catastrophic failures from accidental device overheating. When the junction temperature reduces below 145°C (typical hysteresis = 20°C), the V_{CC} regulator is enabled and a startup sequence is initiated (Figure 5).

Copyright © 2005–2013, Texas Instruments Incorporated

APPLICATIONS INFORMATION

VIN

The voltage applied to the VIN pin, normally the same as the system voltage applied to the power transformer's primary (V_{PWR}), can vary in the range of 13 to 100V with transient capability to 105V. The current into VIN depends primarily on the output driver capacitive loads, the switching frequency, and any external loads on the VCC pins. If the power dissipation associated with the VIN current exceeds the package capability, an external voltage should be applied to the VCC pins (see Figure 6 & Figure 7) to reduce power in the internal start-up regulator. It is recommended the circuit of Figure 26 be used to suppress transients which may occur at the input supply, in particular where VIN is operated close to the maximum operating rating of the LM5034.

When all internal bias currents for the LM5034 and output driver currents are supplied through VIN and the internal V_{CC} regulator, the required input current (I_{IN}) is shown in Figure 6 & Figure 7. In most applications, upon turn-on, I_{IN} increases with V_{IN} as shown in Figure 6 until the UVLO threshold is reached. After the outputs are enabled and the external VCC supply voltage is active, the current into VIN then drops to a nominal 120 µA.

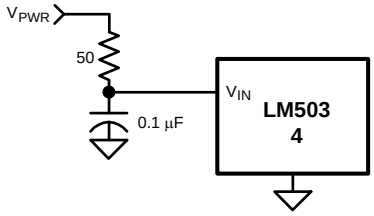

Figure 26. Input Transient Production

FOR APPLICATIONS >100V

For applications where the system input voltage (V_{PWR}) exceeds 100V, VIN can be powered from an external start-up regulator as shown in Figure 27, or from any other low voltage source as shown in Figure 28. Connecting VIN and the VCC together allows the LM5034 to be operated with VIN below 13V. The voltage at the VCC pins must not exceed 15V. The voltage source at the right side of Figure 27 is typically derived from the power stage, and becomes active once the LM5034's outputs are active.

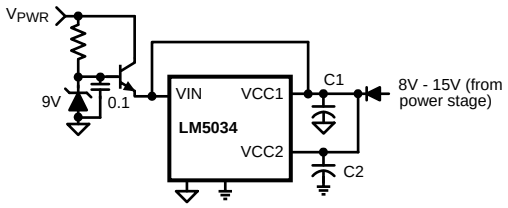

Figure 27. Start-up Regulator for V_{PWR} >100V

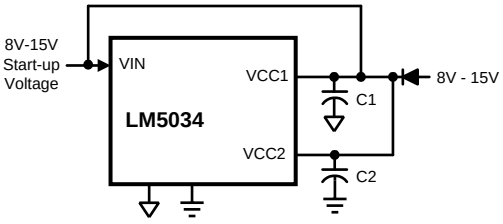

Figure 28. Bypassing the Internal Start-up Regulator

UVLO

The under-voltage lockout threshold (UVLO) is internally set at 1.25V at the UVLO pin. With two external resistors as shown in Figure 29, the LM5034 is enabled when V_{PWR} exceeds the programmed threshold voltage. When V_{PWR} is above the threshold, the internal 20 µA current source is enabled to raise the voltage at the UVLO pin, providing hysteresis. R1 and R2 are determined from the following equations:

$$R1 = V_{HYS}/20\ \mu A \quad (4)$$

$$R2 = \frac{1.25 \times R1}{V_{PWR} - 1.25} \quad (5)$$

where V_{HYS} is the desired UVLO hysteresis at V_{PWR}, and V_{PWR} in the second equation is the turn-on voltage. For example, if the LM5034 is to be enabled when V_{PWR} reaches 20V, and disabled when V_{PWR} is decreased to 17V, R1 calculates to 150 kΩ, and R2 calculates to 10 kΩ. The voltage at UVLO should not exceed 6V at any time.

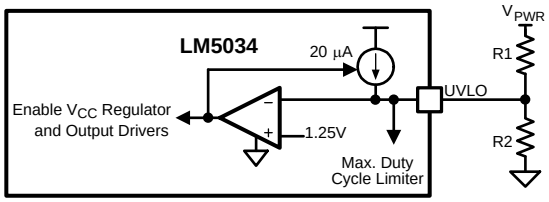

Figure 29. UVLO Circuit

The LM5034 can be remotely shutdown by taking the UVLO pin below 1.25V with an external open collector or open drain device, as shown in Figure 30. The outputs, and the V_{CC} regulator, are disabled, and the LM5034 enters a low power mode. To shut down one regulator without affecting the other, see Soft-Start.

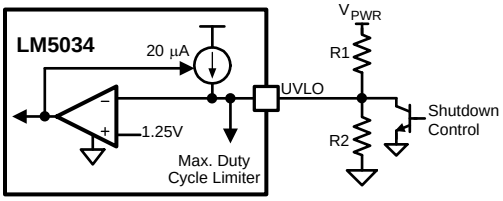

Figure 30. Shutdown Control

VCC1, VCC2

The capacitors at each VCC pin provide not only regulator noise filtering and stability, but also prevents VCC from dropping to the lower under-voltage threshold level (UVT = 6.2V) when the output drivers source current surges to the external MOSFET gates. Additionally, the capacitors provide a necessary time delay during startup. The time delay allows the internal circuitry of the LM5034 and associated external circuitry to stabilize before V_{CC} reaches the upper UVT threshold level (7.6V), at which time the outputs are enabled and the soft-start sequence begins. V_{CC} is nominally regulated at 7.7V. The delay to the UVT level (Figure 5) is calculated from the following:

$$t_{VCC} = \frac{(C1 + C2) \times 7.6V}{I_{CC(Lim)}} \quad (6)$$

where C1 and C2 are the capacitors at VCC1 and VCC2, and $I_{CC(Lim)}$ is the V_{CC} regulator's current limit. If the capacitors are 0.1 µF each, the nominal $I_{CC(Lim)}$ of 22 mA provides a delay of approximately 69 µs. The V_{CC} capacitor values should range between 0.1 µF and 25 µF, and they should be the same value. Experimentation with the final design may be necessary to determine the optimum value for the V_{CC} capacitors.

Copyright © 2005–2013, Texas Instruments Incorporated

The average V_{CC} regulator current required to drive the external MOSFETs is a function of the MOSFET gate capacitance and the switching frequency (see Figure 8). To ensure VCC does not droop below the lower UVT threshold, an external supply should be diode connected to both VCC pins to provide the required current, as shown in Figure 31. The applied V_{CC} voltage must be between 8V and 15V. Providing the V_{CC} voltage higher than the 7.7V regulation level with an external supply shuts off the internal regulator, reducing power dissipation within the IC. Internally there is a diode from the V_{CC} regulator output to VIN. Typically the applied voltage is derived from an auxiliary winding on the power transformer, or on the output inductor.

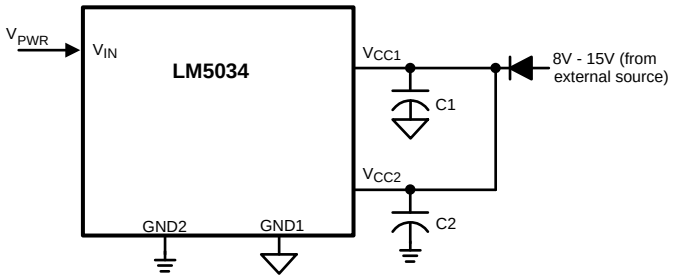

Figure 31. External Power to V_{CC}

OSCILLATOR, SYNC INPUT

The oscillator frequency is generally selected in conjunction with the system magnetic components, and any other aspects of the system which may be affected by the frequency. The R_T resistor at the RT/SYNC pin sets the frequency according to Equation 1. Each output (OUT1 and OUT2) switches at one-half the oscillator frequency. If the required frequency tolerance is critical in a particular application, the tolerance of the external resistor and the frequency tolerance specified in the Electrical Characteristics table must be considered when selecting the R_T resistor.

If the LM5034 is to be synchronized to an external clock, that signal must be coupled into the RT/SYNC pin through a 100 pF capacitor. The external synchronizing frequency must be at least 4% higher than the free running frequency set by the R_T resistor and no higher than twice the free running frequency. The RT/SYNC pin voltage is nominally regulated at 2.0V and the external pulse amplitude should lift the pin to between 3.8V and 5.0V on the low-to-high transition. The synchronization pulse width should be between 15 and 150 ns. The R_T resistor is always required, whether the oscillator is free running or externally synchronized.

VOLTAGE FEEDBACK, COMP1, COMP2

Each COMP pin is designed to accept a voltage feedback signal from the respective regulated output via an error amplifier and (typically) an opto-coupler. A typical configuration is shown in Figure 21. V_{OUT} is compared to a reference by the error amplifier which has an appropriate frequency compensation network. The amplifier's output drives the opto-coupler, which in turn drives the COMP pin.

When the LM5034's two controller channels are configured to provide a single high current output, COMP1 and COMP2 are typically connected together, and to the feedback signal from the optocoupler.

CURRENT SENSE, CS1, CS2

Each CS pin receives an input signal representative of its transformer's primary current, either from a current sense transformer or from a resistor in series with the source of the primary switch, as shown in Figure 32 and Figure 33. In both cases the sensed current creates a ramping voltage across R1, and the R_F/C_F filter suppresses noise and transients. R1, R_F and C_F should be as physically close to the LM5034 as possible, and the ground connection from the current sense transformer, or R1, should be a dedicated track to the appropriate GND pin. The current sense components must provide >0.5V at the CS pin when an over-current condition exists.

Copyright © 2005–2013, Texas Instruments Incorporated

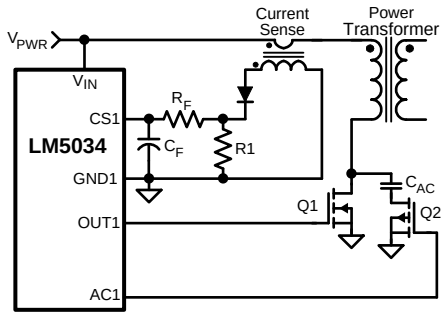

Figure 32. Current Sense Using a Current Sense Transformer

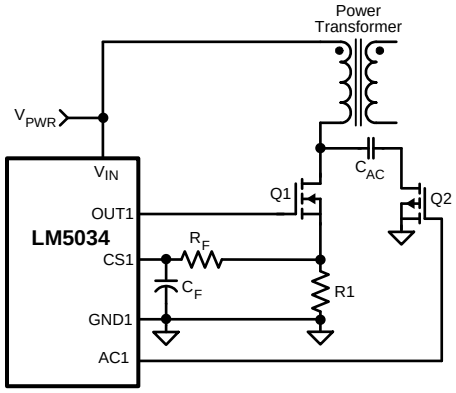

Figure 33. Current Sense Using a Source Sense Resistor (R1)

HICCUP MODE CURRENT LIMIT RESTART

This circuit's operation is described in the Functional Description. Also see Figure 22 and Figure 23. In the case of continuous current limit detection at both CS pins, the time required to reach the 2.55V RES pin threshold is:

$$t1 = \frac{C_{RES} \times 2.55V}{20\ \mu A} = 1.275 \times 10^5 \times C_{RES} \quad (7)$$

For example, if C_{RES} = 0.1 µF the time t1 in Figure 23 is approximately 12.75 ms.

In the case of continuous current limit detection at one CS pin only, the time to reach the 2.55V threshold is increased by a factor of four, or:

$$t1 = 5.1 \times 10^5 \times C_{RES} \quad (8)$$

The time t2 in Figure 23 is set by the capacitor at each SS pin and the internal 1 µA current source, and is equal to:

$$t2 = \frac{C_{SS} \times 1.5V}{1\ \mu A} = 1.5 \times 10^6 \times C_{SS} \quad (9)$$

If C_{SS} = 0.1 µF t2 is ≅150 ms. Time t3 is set by the internal 50 µA current source, and is equal to:

$$t3 = \frac{C_{SS} \times 3.5V}{50\ \mu A} = 7 \times 10^4 \times C_{SS} \quad (10)$$

The time t2 provides a periodic dwell time for the converter in the event of a sustained overload or short circuit. This results in lower average input current and lower power dissipated within the circuit components. It is recommended that the ratio of t2/(t1 + t3) be in the range of 5 to 10 to make good use of this feature.

Copyright © 2005–2013, Texas Instruments Incorporated

If the application requires no delay from the first detection of a current limit condition, so that t1 is effectively zero, the RES pin can be left open (no external capacitor). If it is desired to disable the hiccup mode current limit operation then the RES pin should be connected to ground.

SOFT-START

The capacitors at SS1 and SS2 determine the time required for each regulator's output duty cycle to increase from zero to its final value for regulation. The minimum acceptable time is dependent on the output capacitance and the response of each feedback loop to the COMP pin. If the Soft-start time is too quick, the output could significantly overshoot its intended voltage before the feedback loop has a chance to regulate the PWM controller.

After power is applied and V_{CC} has passed its upper UVT threshold (≅7.6V), the voltage at each SS pin ramps up as its external capacitor is charged up by an internal 50 µA current source (see Figure 5). The voltage at the COMP pins follow the SS pins. When both have reached ≅1.5V, PWM pulses appear at the driver outputs with very low duty cycle. The voltage at each SS pin continues to increase to ≅5.0V. The voltage at each COMP pin, and the PWM duty cycle, increase to the value required for regulation as determined by its feedback loop. The time t1 in Figure 5 is calculated from:

$$t1 = \frac{C_{SS} \times 1.5V}{50\ \mu A} = 3 \times 10^4 \times C_{SS} \quad (11)$$

With a 0.1 µF capacitor at SS, t1 is ≅3 ms.

If the Hiccup Mode Current Limit Restart circuit activates due to repeated current limit detections at CS1 and/or CS2, both SS1 and SS2 are internally grounded (see HICCUP MODE CURRENT LIMIT RESTART). After a short propagation delay, the SS pins are released and the external SS pin capacitors are charged by internal 1 µA current sources. The slow charge rate provides a rest or dwell time for the converter power stage (t2 in Figure 23), reducing the average input current and component temperature rise while in an overload condition. When the voltage at the SS and COMP pins reach ≅1.5V, the first pulse out of either PWM comparator switches the internal SS pin current sources to 50 µA. The voltages at the SS and COMP pins then increase more quickly, increasing the duty cycle at the output drivers. The rest time t2 is the time required for SS to reach 1.5V:

$$t2 = \frac{C_{SS} \times 1.5V}{1\ \mu A} = 1.5 \times 10^6 \times C_{SS} \quad (12)$$

With a 0.1 µF capacitor at SS, t2 is ≅150 ms.

Experimentation with the startup sequence and over-current restart condition is usually necessary to determine the appropriate value for the SS capacitors.

To shutdown one regulator without affecting the other, ground the appropriate SS pin with an open collector or open drain device as shown in Figure 34. The SS pin forces the COMP pin to ground which reduces the PWM duty cycle to zero for that regulator. Releasing the SS pin allows normal operation to resume.

When the LM5034's two controller channels are configured to provide a single high current output, SS1 and SS2 are typically connected together, requiring a single capacitor for the two pins.

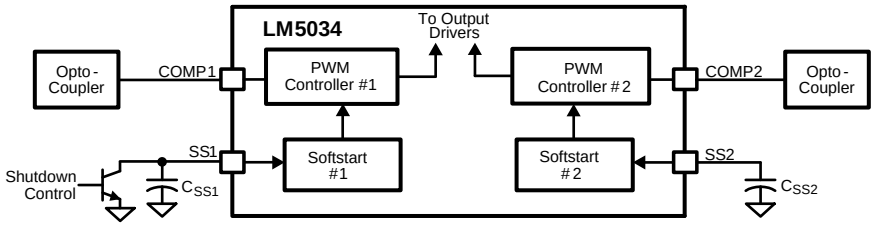

Figure 34. Shutting Down One Regulator Channel

LINE VOLTAGE DEPENDENT MAXIMUM DUTY CYCLE

As V_{PWR} increases and the voltage at UVLO follows, the maximum allowed duty cycle decreases according to the graph of Figure 13. Using values from the example above (R1 = 150 kΩ, R2 = 10 kΩ in Figure 29), the maximum duty cycle varies as shown in Figure 14. If it is desired to increase the slope of the ramp in Figure 14, Figure 35 shows a suggested configuration. After the LM5034 is enabled, Z1 clamps the voltage across R1B, and UVLO increases with V_{PWR} at a rate determined by the ratio R2/(R1A + R2).

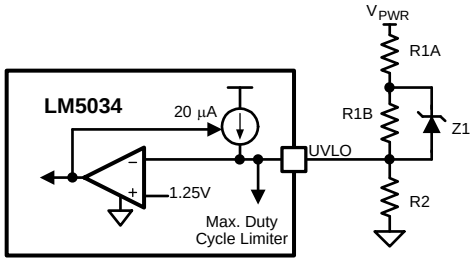

Figure 35. Altering the Slope of Duty Cycle vs. V_{PWR}

USER DEFINED MAX DUTY CYCLE

The maximum allowed duty cycle at OUT1 and OUT2 can be set with a resistor from DCL to GND1. See Figure 12 and Equation 2. The default maximum duty cycle (80%) determined by the internal clock signals can be selected by setting $R_{DCL} = R_T$. The oscillator frequency setting resistor (R_T) must be determined before R_{DCL} is selected. The DCL pin should not be left open.

PRINTED CIRCUIT (PC) BOARD LAYOUT

The LM5034 Current Sense and PWM comparators are very fast, and respond to short duration noise pulses. The components at the CS, COMP, SS, DCL, UVLO, OVLP and the RT/SYNC pins should be as physically close as possible to the IC, thereby minimizing noise pickup in the PC board tracks.

Layout considerations are critical for the current sense filter. If current sense transformers are used, both leads of each transformer secondary should be routed to the sense filter components and to the IC pins. The ground side of each transformer should be connected via a dedicated PC board track to its appropriate GND pin, rather than through the ground plane.

If the current sense circuits employ sense resistors in the drive transistor sources, low inductance resistors should be used. In this case, all the noise sensitive low current ground tracks should be connected in common near the IC, and then a single connection made to the power ground (sense resistor ground point). The outputs of the LM5034 should have short direct paths to the power MOSFETs in order to minimize inductance in the PC board traces.

The two ground pins (GND1, GND2) must be connected together with a short direct connection to avoid jitter due to relative ground bounce in the operation of the two regulators.

If the internal dissipation of the LM5034 produces high junction temperatures during normal operation, the use of wide PC board traces can help conduct heat away from the IC. Judicious positioning of the PC board within the end product, along with use of any available air flow (forced or natural convection) can help reduce the junction temperatures.

Copyright © 2005–2013, Texas Instruments Incorporated

APPLICATION CIRCUIT EXAMPLE

Figure 40 shows an example of an LM5034 controlled 200W dual interleaved regulator which provides two independent regulated outputs or a single high current output. The input voltage range (V_{PWR}) is 36V to 78V, and the output voltages are 3.3V and 2.5V in the dual output mode, or 3.3V in the single output mode. The output current capability is 30A from each output or 60A in the single output mode. Current sense transformers T1 and T2 provide information to the CS2 and CS1 pins for the current mode control, and error amplifiers U3 and U4 provide voltage feedback to COMP2 and COMP1 via optocoupler U2. Synchronous rectifiers Q5-Q12 minimize rectification losses in the secondaries. An auxiliary winding on inductor L2 provides power to the LM5034 VCC pins when the outputs are enabled. The UVLO levels are ≅34.3V for increasing V_{PWR}, and ≅32.3V for decreasing V_{PWR}. The circuit can be shut down by forcing the ON/OFF input (J2) below 1.25V. An external synchronizing frequency can be applied to the SYNC input (J3). Each regulator output is current limited at ≅31.5A.

To configure the circuit for two independent outputs, jumper A-B is installed, and the other jumpers connections (C through G) are left open. U5 and U6 are the references for the two error amplifiers which control the LM5034's COMP pins via the optocouplers. See Figure 36.

To configure the circuit for a single high current output, jumpers B-C, D-E, and F-G are installed and A-B is removed. Output terminals J8 and J6 are connected together at the load, as well as the ground terminals J5 and J7. In this mode U4 is a follower to error amplifier U3, and the optocoupler outputs are connected together to provide the same voltage to COMP1 and COMP2. See Figure 37. Efficiency measurements for this circuit are shown in Figure 38 and Figure 39.

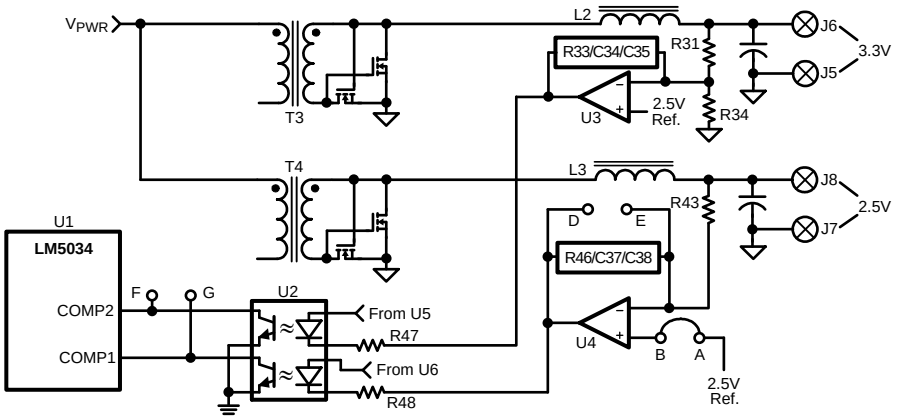

Figure 36. Circuit Configuration for Independent Outputs

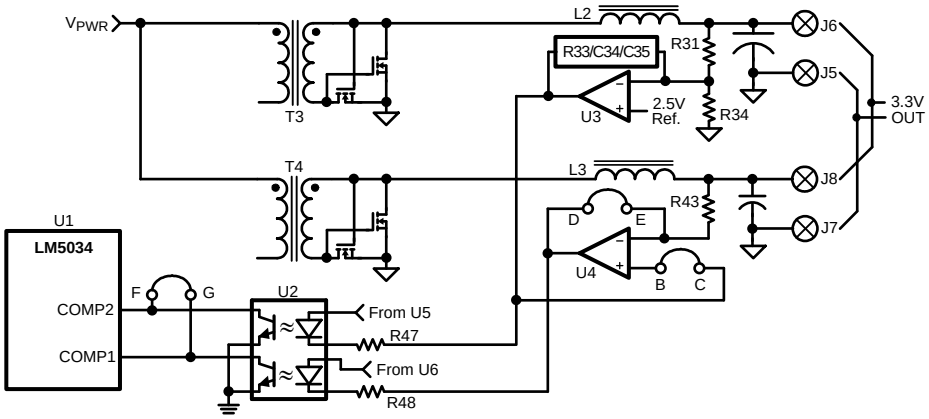

Figure 37. Circuit Configuration for Single High Current Output

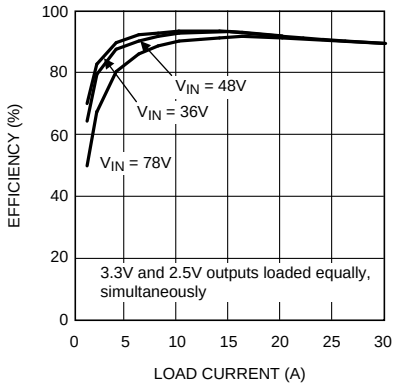

Figure 38. Total Board Efficiency, Independent Outputs

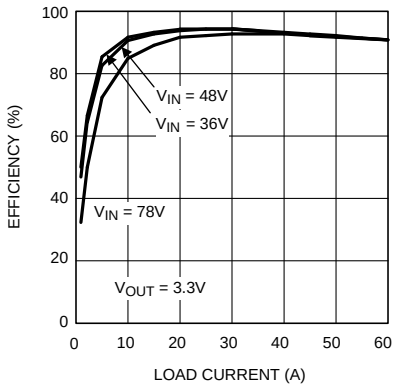

Figure 39. Efficiency, Single Output

Copyright © 2005–2013, Texas Instruments Incorporated

Evaluation Board Schematic

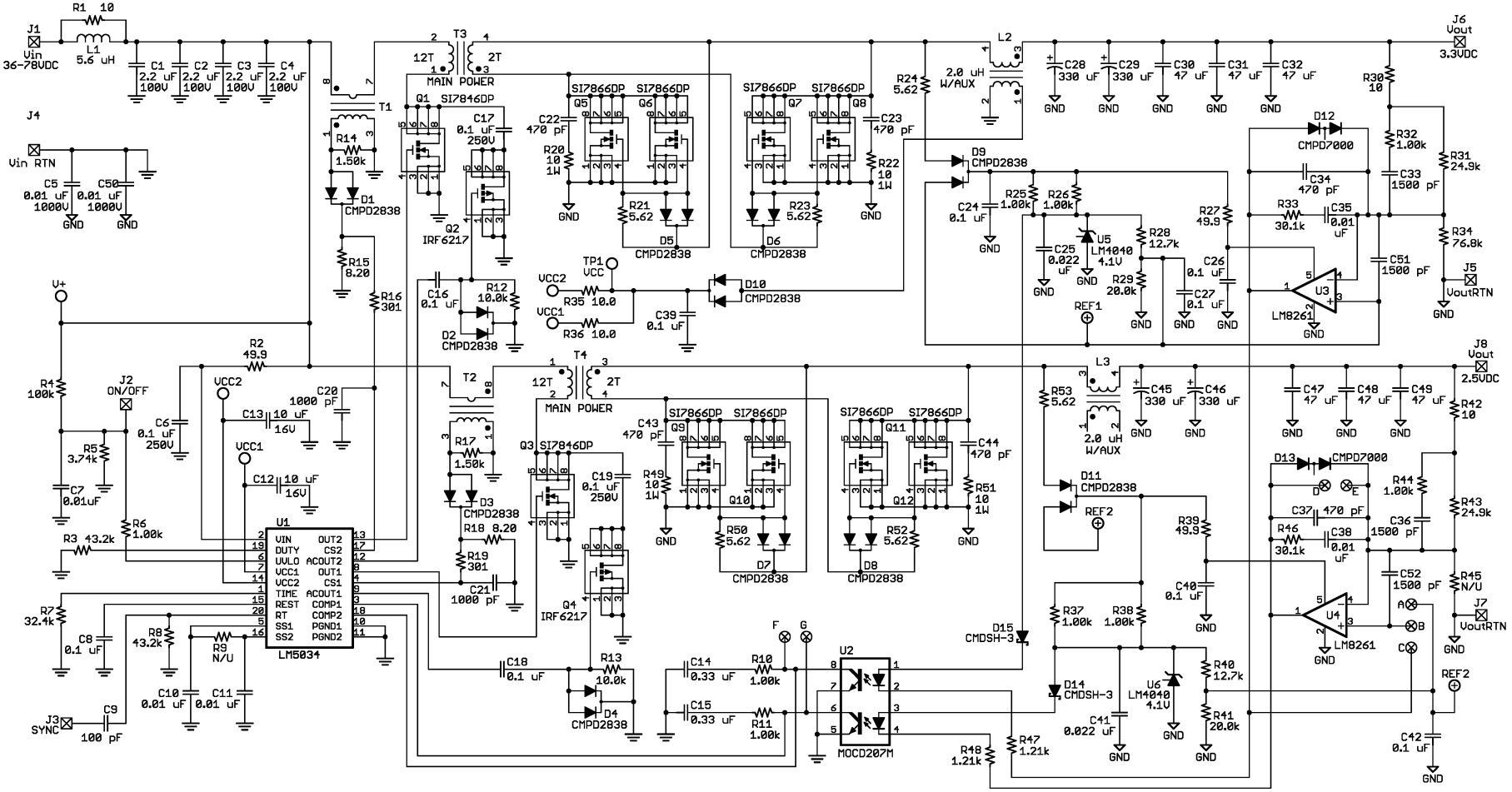

Figure 40. Dual Interleaved Regulator

Table 1. Bill of Materials (Circuit of Figure 40)

Item	Description	Package	Value
C1-4	Capacitor	1812	2.2 µF, 100V
C5, 50	Capacitor	1812	0.01 µF, 1000V
C6, 17, 19	Capacitor	1206	0.1 µF, 250V
C7, 10, 11, 35, 38	Capacitor	0805	0.01 µF, 50V
C8, 16, 18, 24, 26, 27, 39, 40, 42	Capacitor	0805	0.1 µF, 50V
C9	Capacitor	0805	100 pF
C12, 13	Capacitor	1210	10 µF, 16V
C14, 15	Capacitor	0805	0.33 µF
C20, 21	Capacitor	0805	1000 pF
C22, 23, 34, 37, 43, 44	Capacitor	0805	470 pF
C25, 41	Capacitor	0805	0.022 µF
C28, 29, 45, 46	Capacitor	3018	330 µF, 6.3V Tantalum
C30-32, 47-49	Capacitor	1812	47 µF
C33, 36, 51, 52	Capacitor	0805	1500 pF
D1-D11	Dual Diode	SOT-23	75V, 200 mA
D12, 13	Dual Diode	SOT-23	100V, 200 mA
D14, 15	Schottky diode	SOD-323	30V, 100 mA
L1	Inductor, TDK SLF12575	12.5 x 12.5	5.6 µH, 6A
L2, 3	Inductor w/ aux out, Coilcraft B0358-C	0.92 x 0.81	2 µH, 30A
Q1, 3	N-MOSFET, Vishay Si7846DP	SO8	150V, 4A
Q2, 4	P-MOSFET, IRF6217	SO8	150V, 0.7A
Q5-12	N-MOSFET, Vishay Si7866DP	SO8	20V, 25A
R1	Resistor	1206	10Ω, 1/8W
R2	Resistor	1206	49.9Ω
R3, 8	Resistor	0805	43.2kΩ
R4	Resistor	0805	100kΩ
R5	Resistor	0805	3.74kΩ
R6, 10, 11, 25, 26, 32, 37, 38, 44	Resistor	0805	1.0kΩ
R7	Resistor	0805	32.4kΩ
R9, 45	Resistor	0805	Open
R12, 13	Resistor	0805	10kΩ
R14, 17	Resistor	0805	1.5kΩ
R15, 18	Resistor	0805	8.2Ω
R16, 19	Resistor	0805	301Ω
R20, 22, 49, 51	Resistor	2512	10Ω, 1W
R21, 23, 24, 50, 52, 53	Resistor	0805	5.62Ω
R27, 39	Resistor	0805	49.9Ω
R28, 40	Resistor	0805	12.7kΩ
R29, 41	Resistor	0805	20kΩ
R30, 35, 36, 42	Resistor	0805	10Ω
R31, 43	Resistor	0805	24.9kΩ
R33, 46	Resistor	0805	30.1kΩ
R34	Resistor	0805	76.8kΩ
R47, 48	Resistor	0805	1.21kΩ
T1, 2	Transformer, Pulse Eng. P8208T	0.33 x 0.28	100:1, 6A
T3, 4	Transformer, Coilcraft B0357-B	0.92 x 0.81	12:2, 30A
U1	PWM dual controller	TSSOP-20	LM5034PW

Copyright © 2005–2013, Texas Instruments Incorporated

Table 1. Bill of Materials (Circuit of Figure 40) (continued)

Item	Description	Package	Value
U2	Dual Optocoupler	SO8	MOCD207M
U3, 4	Op Amp	SOT23-5	LM8261
U5, 6	Reference	SOT23	LM4040-4.1V

Copyright © 2005–2013, Texas Instruments Incorporated

REVISION HISTORY

Changes from Original (April 2013) to Revision A	Page
• Changed layout of National Data Sheet to TI format	28

Copyright © 2005–2013, Texas Instruments Incorporated

PACKAGING INFORMATION

Orderable Device	Status (1)	Package Type	Package Drawing	Pins	Package Qty	Eco Plan (2)	Lead/Ball Finish (6)	MSL Peak Temp (3)	Op Temp (°C)	Device Marking (4/5)	Samples
LM5034MTC	NRND	TSSOP	PW	20	73	TBD	Call TI	Call TI	-40 to 125	LM5034 MT	
LM5034MTC/NOPB	ACTIVE	TSSOP	PW	20	73	Green (RoHS & no Sb/Br)	SN	Level-1-260C-UNLIM	-40 to 125	LM5034 MT	Samples
LM5034MTCX/NOPB	ACTIVE	TSSOP	PW	20	2500	Green (RoHS & no Sb/Br)	SN	Level-1-260C-UNLIM	-40 to 125	LM5034 MT	Samples

(1) The marketing status values are defined as follows:
ACTIVE: Product device recommended for new designs.
LIFEBUY: TI has announced that the device will be discontinued, and a lifetime-buy period is in effect.
NRND: Not recommended for new designs. Device is in production to support existing customers, but TI does not recommend using this part in a new design.
PREVIEW: Device has been announced but is not in production. Samples may or may not be available.
OBSOLETE: TI has discontinued the production of the device.

(2) **RoHS:** TI defines "RoHS" to mean semiconductor products that are compliant with the current EU RoHS requirements for all 10 RoHS substances, including the requirement that RoHS substance do not exceed 0.1% by weight in homogeneous materials. Where designed to be soldered at high temperatures, "RoHS" products are suitable for use in specified lead-free processes. TI may reference these types of products as "Pb-Free".
RoHS Exempt: TI defines "RoHS Exempt" to mean products that contain lead but are compliant with EU RoHS pursuant to a specific EU RoHS exemption.
Green: TI defines "Green" to mean the content of Chlorine (Cl) and Bromine (Br) based flame retardants meet JS709B low halogen requirements of <=1000ppm threshold. Antimony trioxide based flame retardants must also meet the <=1000ppm threshold requirement.

(3) MSL, Peak Temp. - The Moisture Sensitivity Level rating according to the JEDEC industry standard classifications, and peak solder temperature.

(4) There may be additional marking, which relates to the logo, the lot trace code information, or the environmental category on the device.

(5) Multiple Device Markings will be inside parentheses. Only one Device Marking contained in parentheses and separated by a "~" will appear on a device. If a line is indented then it is a continuation of the previous line and the two combined represent the entire Device Marking for that device.

(6) Lead/Ball Finish - Orderable Devices may have multiple material finish options. Finish options are separated by a vertical ruled line. Lead/Ball Finish values may wrap to two lines if the finish value exceeds the maximum column width.

Important Information and Disclaimer: The information provided on this page represents TI's knowledge and belief as of the date that it is provided. TI bases its knowledge and belief on information provided by third parties, and makes no representation or warranty as to the accuracy of such information. Efforts are underway to better integrate information from third parties. TI has taken and continues to take reasonable steps to provide representative and accurate information but may not have conducted destructive testing or chemical analysis on incoming materials and chemicals. TI and TI suppliers consider certain information to be proprietary, and thus CAS numbers and other limited information may not be available for release.

In no event shall TI's liability arising out of such information exceed the total purchase price of the TI part(s) at issue in this document sold by TI to Customer on an annual basis.

TAPE AND REEL INFORMATION

REEL DIMENSIONS

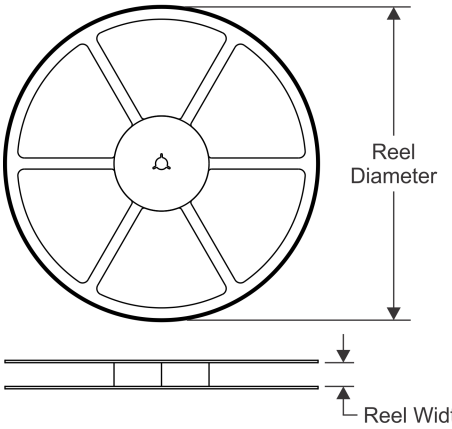

TAPE DIMENSIONS

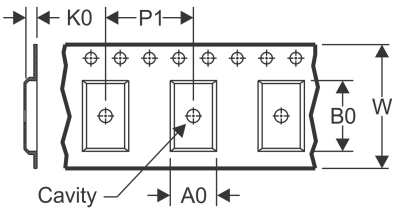

A0	Dimension designed to accommodate the component width
B0	Dimension designed to accommodate the component length
K0	Dimension designed to accommodate the component thickness
W	Overall width of the carrier tape
P1	Pitch between successive cavity centers

QUADRANT ASSIGNMENTS FOR PIN 1 ORIENTATION IN TAPE

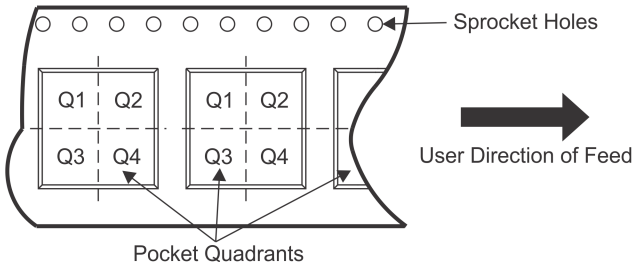

*All dimensions are nominal

Device	Package Type	Package Drawing	Pins	SPQ	Reel Diameter (mm)	Reel Width W1 (mm)	A0 (mm)	B0 (mm)	K0 (mm)	P1 (mm)	W (mm)	Pin1 Quadrant
LM5034MTCX/NOPB	TSSOP	PW	20	2500	330.0	16.4	6.95	7.1	1.6	8.0	16.0	Q1

TAPE AND REEL BOX DIMENSIONS

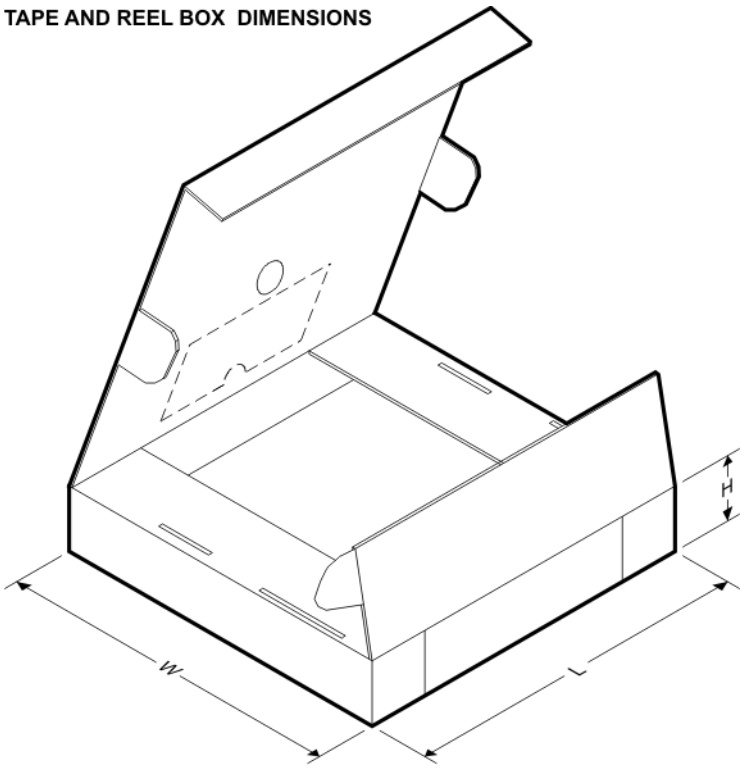

*All dimensions are nominal

Device	Package Type	Package Drawing	Pins	SPQ	Length (mm)	Width (mm)	Height (mm)
LM5034MTCX/NOPB	TSSOP	PW	20	2500	367.0	367.0	35.0

PW (R–PDSO–G20) PLASTIC SMALL OUTLINE

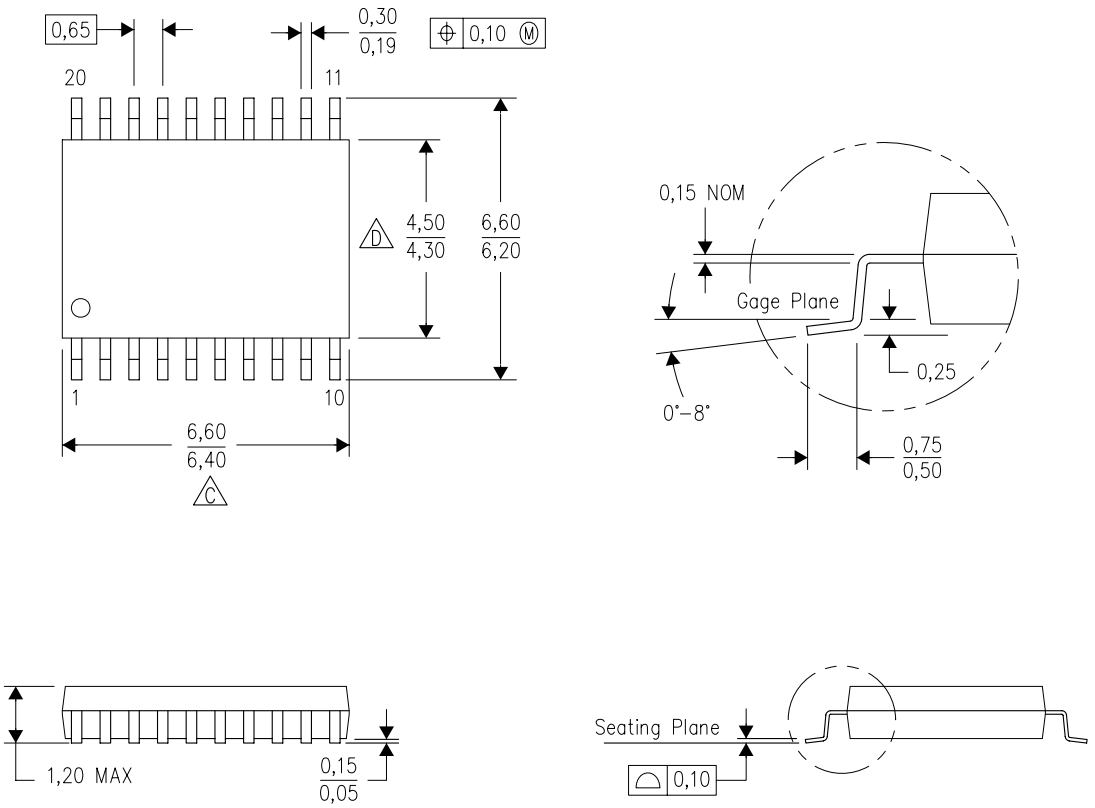

4040064–5/G 02/11

NOTES:
A. All linear dimensions are in millimeters. Dimensioning and tolerancing per ASME Y14.5M–1994.
B. This drawing is subject to change without notice.
C. Body length does not include mold flash, protrusions, or gate burrs. Mold flash, protrusions, or gate burrs shall not exceed 0,15 each side.
D. Body width does not include interlead flash. Interlead flash shall not exceed 0,25 each side.
E. Falls within JEDEC MO–153

IMPORTANT NOTICE AND DISCLAIMER

TI PROVIDES TECHNICAL AND RELIABILITY DATA (INCLUDING DATASHEETS), DESIGN RESOURCES (INCLUDING REFERENCE DESIGNS), APPLICATION OR OTHER DESIGN ADVICE, WEB TOOLS, SAFETY INFORMATION, AND OTHER RESOURCES “AS IS” AND WITH ALL FAULTS, AND DISCLAIMS ALL WARRANTIES, EXPRESS AND IMPLIED, INCLUDING WITHOUT LIMITATION ANY IMPLIED WARRANTIES OF MERCHANTABILITY, FITNESS FOR A PARTICULAR PURPOSE OR NON-INFRINGEMENT OF THIRD PARTY INTELLECTUAL PROPERTY RIGHTS.

These resources are intended for skilled developers designing with TI products. You are solely responsible for (1) selecting the appropriate TI products for your application, (2) designing, validating and testing your application, and (3) ensuring your application meets applicable standards, and any other safety, security, or other requirements. These resources are subject to change without notice. TI grants you permission to use these resources only for development of an application that uses the TI products described in the resource. Other reproduction and display of these resources is prohibited. No license is granted to any other TI intellectual property right or to any third party intellectual property right. TI disclaims responsibility for, and you will fully indemnify TI and its representatives against, any claims, damages, costs, losses, and liabilities arising out of your use of these resources.

TI’s products are provided subject to TI’s Terms of Sale (www.ti.com/legal/termsofsale.html) or other applicable terms available either on ti.com or provided in conjunction with such TI products. TI’s provision of these resources does not expand or otherwise alter TI’s applicable warranties or warranty disclaimers for TI products.

Mailing Address: Texas Instruments, Post Office Box 655303, Dallas, Texas 75265
Copyright © 2020, Texas Instruments Incorporated