AN-1387 LM5026 Evaluation Board

1 Introduction

The performance of the evaluation board is as follows:

- Input range: 36V to 78V
- Output voltage: 3.3V
- Output current: 0 to 30A
- Measured efficiency: 90% at 30A, 92.5% at 15A
- Frequency of operation: 230kHz
- Board size: 2.3 x 2.4 x 0.5 inches
- Load Regulation: 1%
- Line Regulation: 0.1%
- Line UVLO, Hiccup Current Limit

The printed circuit board consists of 4 layers of 3 ounce copper on FR4 material with a total thickness of 0.050 inches. Soldermask has been omitted from some areas to facilitate cooling. The unit is designed for continuous operation at rated load at < 40°C and a minimum airflow of 200 CFM.

2 Theory of Operation

Power converters based on the Forward topology offer high efficiency and good power handling capability in applications up to several hundred Watts. The operation of the transformer in a forward topology does not inherently self-reset each power switching cycle, a mechanism to reset the transformer is required. The active clamp reset mechanism is presently finding extensive use in medium level power converters in the 50 to 200W range.

The Forward converter is derived from the Buck topology family, employing a single modulating power switch. The main difference between the topologies are, the Forward topology employs a transformer to provide input / output ground isolation and a step down or step up function.

Each cycle, the main primary switch turns on and applies the input voltage across the primary winding, which has 12 turns. The transformer secondary has 2 turns, leading to a 6:1 step-down of the input voltage. For an output voltage of 3.3V the required duty cycle (D) of the main switch must vary from approximately 65% (low line) to 25% (high line). The clamp capacitor along with the reset switch reverse biases the transformer primary each cycle when the main switch turns off. This reverse voltage resets the transformer. The clamp capacitor voltage is Vin / (1-D).

The secondary rectification employs self-driven synchronous rectification to maintain high efficiency and ease of drive.

Feedback from the output is processed by an amplifier and reference, generating an error voltage, which is coupled back to the primary side control through an optocoupler. The COMP input to the LM5026 greatly increases the achievable loop bandwidth. The capacitance effect (and associated pole) of the optocoupler is greatly reduced by holding the voltage across the optocoupler constant. The LM5026 current mode controller pulse width modulates the error signal with a ramp signal derived from the transformer primary. A standard “type II” (pole-zero-pole) is used as a compensation network. The LM5026 provides a controlled delay necessary for the reset switch.

The evaluation board can be synchronized to an external clock with a recommended frequency range of 230 to 300KHz.

All trademarks are the property of their respective owners.

Copyright © 2005–2013, Texas Instruments Incorporated

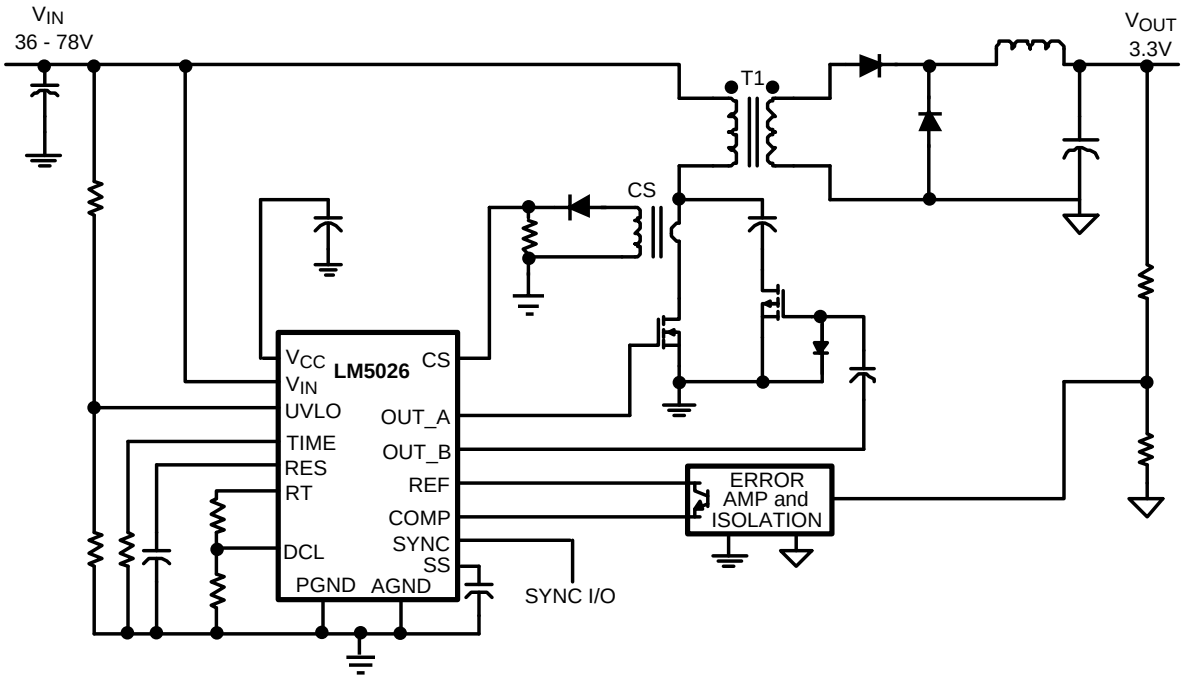

Figure 1. Schematic

3 Powering and Loading Considerations

When applying power to the LM5026 evaluation board certain precautions need to be followed. A mis-connection can damage the assembly.

4 Proper Connections

When operated at low input voltages the evaluation board can draw up to 3.5A of current at full load. The maximum rated output current is 30A. Be sure to choose the correct connector and wire size when attaching the source supply and the load. Monitor the current into and out of the evaluation board. Monitor the voltage directly at the output terminals of the evaluation board. The voltage drop across the load connecting wires will give inaccurate measurements, this is especially true for accurate efficiency measurements.

5 Source Power

The evaluation board can be viewed as a constant power load. At low input line voltage (36V) the input current can reach 3.5A, while at high input line voltage (78V) the input current will be approximately 1.5A. Therefore to fully test the LM5026 evaluation board a DC power supply capable of at least 80V and 4A is required. The power supply must have adjustments for both voltage and current.

The power supply and cabling must present a low impedance to the evaluation board. Insufficient cabling or a high impedance power supply will droop during power supply application with the evaluation board inrush current. If large enough, this droop will cause a chattering condition upon power up. This chattering condition is an interaction with the evaluation board undervoltage lockout, the cabling impedance and the inrush current.

Copyright © 2005–2013, Texas Instruments Incorporated

6 Loading

An appropriate electronic load, with specified operation down to 3.0V minimum, is desirable. The resistance of a maximum load is 0.11Ω. The high output current requires thick cables! If resistor banks are used there are certain precautions to be taken. The wattage and current ratings must be adequate for a 30A, 100W supply. Monitor both current and voltage at all times. Ensure there is sufficient cooling provided for the load.

7 Air Flow

Full power loading should never be attempted without providing the specified 200 CFM of air flow over the evaluation board. A stand-alone fan should be provided.

8 Powering Up

Using the provided shutdown pin will allow powering up the source supply with the current level set low. It is suggested that the load be kept low during the first power up. Set the current limit of the source supply to provide about 1.5 times the wattage of the load. As you remove the connection from the shutdown pin to ground, immediately check for 3.3 volts at the output.

A most common occurrence, that will prove unnerving, is when the current limit set on the source supply is insufficient for the load. The result is similar to having the high source impedance referred to earlier. The interaction of the source supply folding back and the evaluation board going into undervoltage shutdown will start an oscillation, or chatter, that may have undesirable consequences.

A quick efficiency check is the best way to confirm that everything is operating properly. If something is amiss you can be reasonably sure that it will affect the efficiency adversely. Few parameters can be incorrect in a switching power supply without creating losses and potentially damaging heat.

9 Over Current Protection

The evaluation board is configured with hiccup over-current protection. In the event of an output overload (approximately 33A) the unit will discharge the softstart capacitor, which disables the power stage. After a delay the softstart is released. The shutdown, delay and slow recharge time of the softstart capacitor protects the unit, especially during short circuit event where the stress is highest.

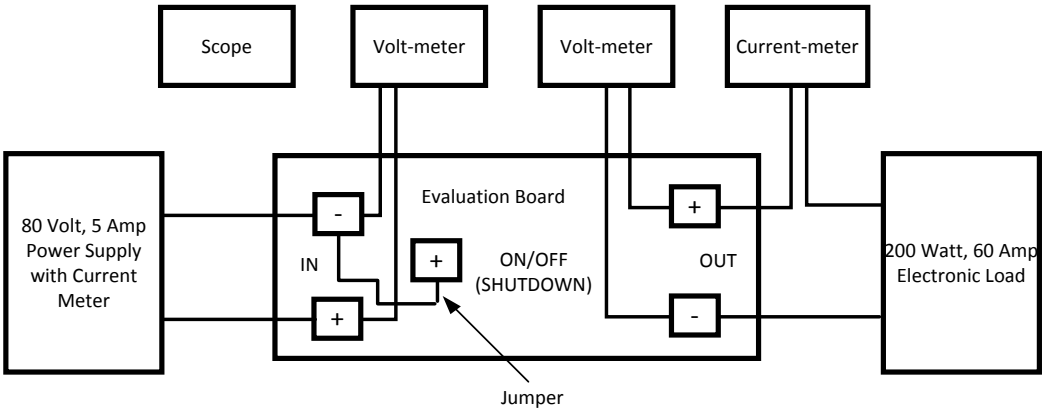

Figure 2. Typical Evaluation Setup

10 Performance Characteristics

10.1 Turn-On Waveforms

When applying power to the LM5026 evaluation board a certain sequence of events occurs. Soft-start capacitor values and other components allow for a minimal output voltage for a short time until the feedback loop can stabilize without overshoot. Figure 3 shows the output voltage during a typical start-up with a 48V input and a load of 5A. There is no overshoot during startup.

Copyright © 2005–2013, Texas Instruments Incorporated

10.2 Output Ripple Waveforms

Figure 4 shows the transient response for a load of change from 5A to 25A. The upper trace shows minimal output voltage droop and overshoot during the sudden change in output current shown by the lower trace.

Figure 5 shows typical output ripple seen directly across the output capacitor, for an input voltage of 48V and a load of 30A. This waveform is typical of most loads and input voltages.

Figure 6 and Figure 7 show the drain voltage of Q1 with a 25A load. Figure 6 represents an input voltage of 38V and Figure 7 represents an input voltage of 78V.

Figure 8 shows the gate voltages of the synchronous rectifiers. The drive from the main power transformer is delayed slightly at turn-on by a resistor interacting with the gate capacitance. This provides improved switching transitions for optimum efficiency. The difference in drive voltage is inherent in the topology and varies with line voltage.

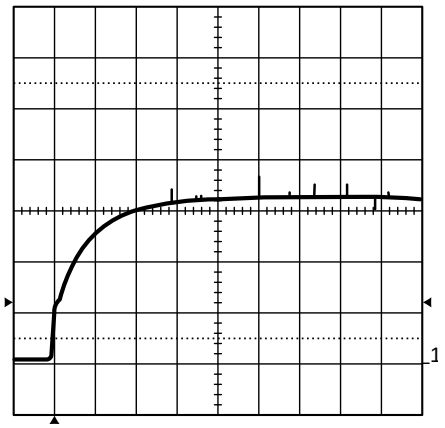

Conditions: Input Voltage = 48VDC Output Current = 5A Trace 1: Output Voltage Volts/div = 1V Horizontal Resolution = 1msec/div

Figure 3. Output Voltage

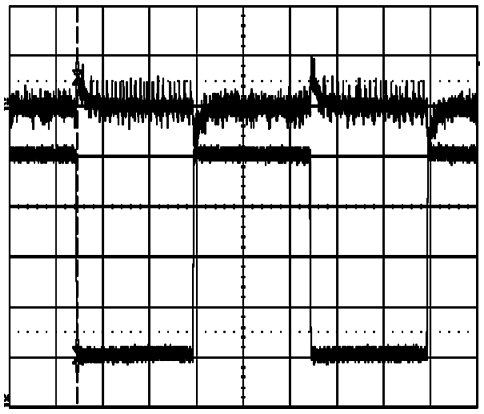

Conditions: Input Voltage = 48VDC Output Current = 5A to 25A Trace 1: Output Voltage Volts/div = 0.5V Trace 2: Output Current, Amps/div = 5A Horizontal Resolution = 1msec/div

Figure 4. Transient Response

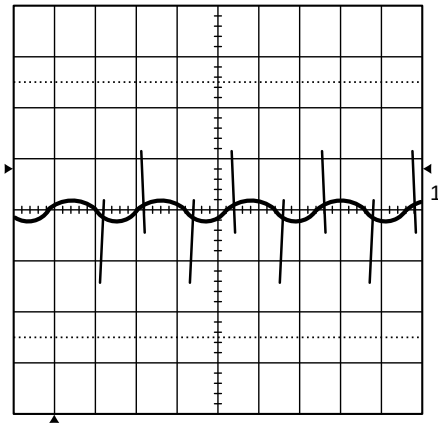

Conditions: Input Voltage = 48VDC Output Current = 30A Bandwidth Limit = 25MHz Trace 1: Output Ripple Voltage Volts/div = 50mV Horizontal Resolution = 2µs/div

Figure 5. Typical Output Ripple

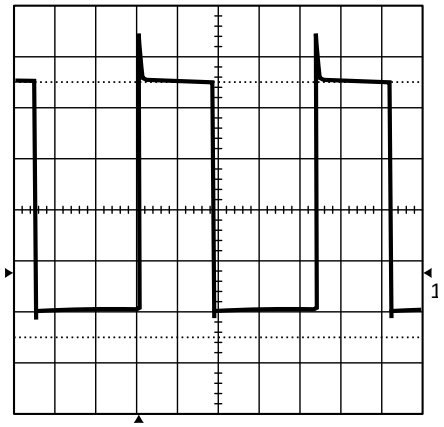

Conditions: Input Voltage = 38VDC Output Current = 25A Trace 1: Q1 drain voltage Volts/div = 20V Horizontal Resolution = 1µs/div

Figure 6. Drain Voltage of Q1

Copyright © 2005–2013, Texas Instruments Incorporated

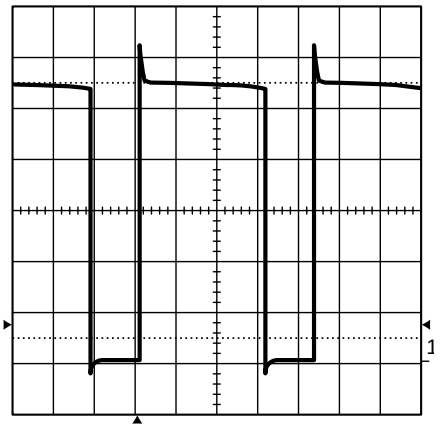

Conditions: Input Voltage = 78VDC Output Current = 25A
Trace 1: Q1 drain voltage Volts/div = 20V Horizontal Resolution = 1µs/div

Figure 7. Drain Voltage of Q1

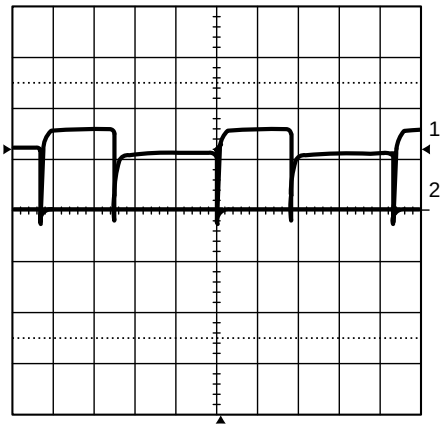

Conditions: Input Voltage = 48VDC Output Current = 5A
Synchronous rectifier, Q3 gate Volts/div = 5V Trace 1:
Synchronous rectifier, Q3 gate Volts/div = 5V Trace 2:
Synchronous rectifier, Q5 gate Volts/div = 5V Horizontal Resolution = 1µs/div

Figure 8. Gate Voltages

Copyright © 2005–2013, Texas Instruments Incorporated

11 Application Circuit

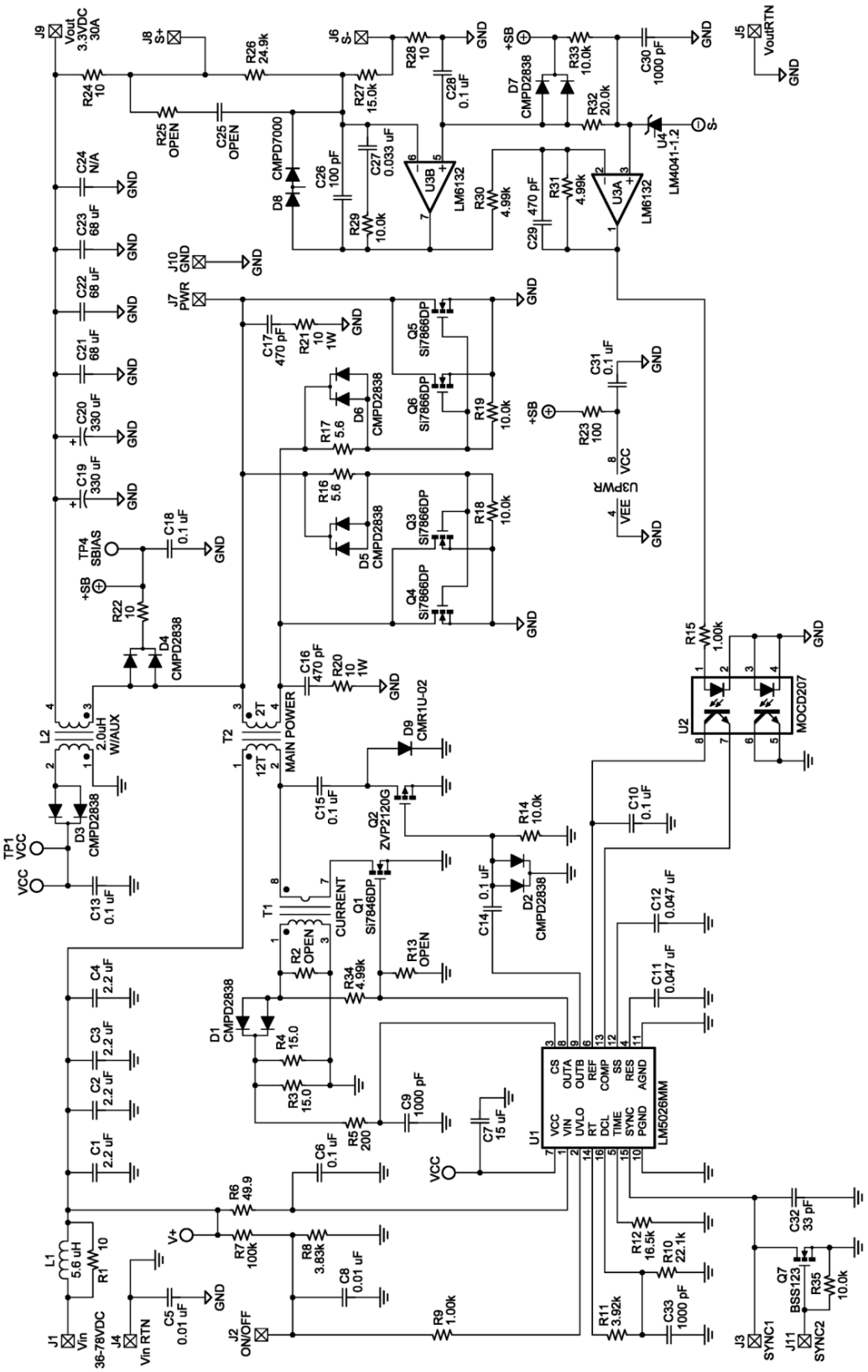

Figure 9. Application Circuit: Input 36 to 78V, Output 3.3V, 30A

Copyright © 2005–2013, Texas Instruments Incorporated

12 Layout and Bill of Materials (BOM)

The Bill of Materials is shown in Table 1 and includes the manufacturer and part number. The layers of the printed circuit board (PCB) are shown in top down order. The view is from the top down except for the bottom silkscreen, which is shown viewed from the bottom. The scale is approximately X1.5. The printed circuit board consists of 4 layers of 3 ounce copper on FR4 material with a total thickness of 0.050 inches.

Table 1. Bill of Materials (BOM)

QTY	DESIGNATOR	PART NUMBER	DESCRIPTION	VALUE
4	C1-C4	C4532X7R2A225M	CAPACITOR, CER, TDK	2.2µ, 100V
1	C5	C4532X7R3A103K	CAPACITOR, CER, TDK	0.01µ, 1000V
2	C6,C15	C3216X7R2E104K	CAPACITOR, CER, TDK	0.1µ, 250V
1	C7	C4532X7R1E156M	CAPACITOR, CER, TDK	15µ, 25V
1	C8	C2012X7R2A103K	CAPACITOR, CER, TDK	0.01µ, 100V
3	C9,C30,C33	C2012X7R2A102K	CAPACITOR, CER, TDK	1000p, 100V
4	C10,C14,C28, C31	C2012X7R1H104K	CAPACITOR, CER, TDK	0.1µ, 50V
2	C11, C12	C2012X7R1H473K	CAPACITOR, CER, TDK	0.047µ, 50V
2	C13,C18	C1206C104K5RAC	CAPACITOR, CER, KEMET	0.1µ, 50V
3	C16, C17, C29	C0805C471J5GAC	CAPACITOR, CER, KEMET	470p, 50V
2	C19,C20	T520D337M006AS4350	CAPACITOR,TANT,KEMET	330µ, 6.3V
3	C21,C22,C23	C4532X7S0G686M	CAPACITOR, CER, TDK	68µ, 4V
	C24, C25	OPEN	NOT USED	
1	C26	C0805C101J5GAC	CAPACITOR, CER, KEMET	100p, 50V
1	C27	C1206C333K5RAC	CAPACITOR, CER, KEMET	0.033µ, 50V
1	C32	C0805C330J5GAC	CAPACITOR, CER, KEMET	33p, 50V
7	D1- D7	CMPD2838	DIODE, SIGNAL, CENTRAL	
1	D8	CMPD7000	DIODE, SIGNAL, CENTRAL	
1	D9	CMR1U-02	DIODE, 200V, CENTRAL	
1	L1	SLF10145T-5R6M3R2	INPUT CHOKE, TDK	5.6µH, 3.5A
1	L2	B0358-C	CHOKE with AUX, COILCRAFT	2µH, 33A
1	Q1	SI7846DP	N-FET, SILICONIX	150V, 50m
1	Q2	ZVP2120GTA	P-FET, ZETEX	200V, 20
4	Q3 - Q6	SI7866DP	FET, SILICONIX	20V, 3m
4	R1, R22, R24, R28	CRCW120610R0F	RESISTOR	10Ω
	R2, R13, R25	OPEN	NOT USED	
2	R3, R4	CRCW120615R0F	RESISTOR	15Ω
1	R5	CRCW12062000F	RESISTOR	200Ω
1	R6	CRCW120649R9F	RESISTOR	49.9Ω
1	R7	CRCW12061003F	RESISTOR	100kΩ
1	R8	CRCW12063831F	RESISTOR	3.83kΩ
2	R9, R15	CRCW12061001F	RESISTOR	1kΩ
1	R10	CRCW12062212F	RESISTOR	22.1kΩ
1	R11	CRCW12063921F	RESISTOR	3.92kΩ
1	R12	CRCW12061652F	RESISTOR	16.5kΩ
5	R14,R18,R19,R29,R33,R35	CRCW12061002F	RESISTOR	10kΩ
2	R16, R17	CRCW12065R60F	RESISTOR	5.6Ω
2	R20, R21	CRCW2512100J	RESISTOR	10Ω, 1W
1	R23	CRCW12061000F	RESISTOR	100Ω
1	R26	CRCW12062492F	RESISTOR	24.9kΩ
1	R27	CRCW12061502F	RESISTOR	15kΩ

Copyright © 2005–2013, Texas Instruments Incorporated

Table 1. Bill of Materials (BOM) (continued)

QTY	DESIGNATOR	PART NUMBER	DESCRIPTION	VALUE
3	R30, R31, R34	CRCW12064991F	RESISTOR	4.99kΩ
1	R32	CRCW12062002F	RESISTOR	20kΩ
1	T1	P8208T	CURRENT XFR, PULSE ENG	100:01
1	T2	B0357-B	POWER XFR, COILCRAFT	12:02
1	U1	LM5026	CONTROLLER, Texas Instruments	
1	U2	MOCD207M	OPTO-COUPLER, QT OPTO	
1	U3	LM6132	OPAMP, Texas Instruments	
1	U4	LM4041	REFERENCE, Texas Instruments	

13 PCB Layouts

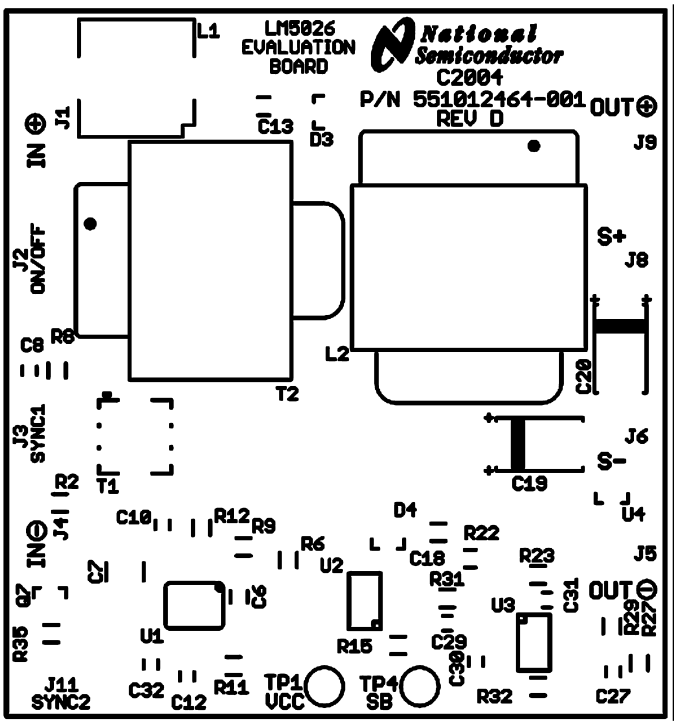

Figure 10.

Copyright © 2005–2013, Texas Instruments Incorporated

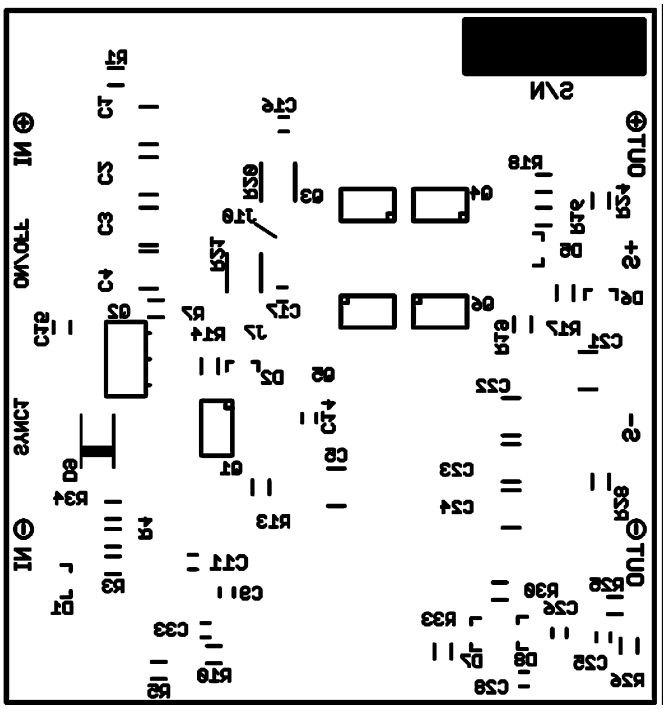

Figure 11.

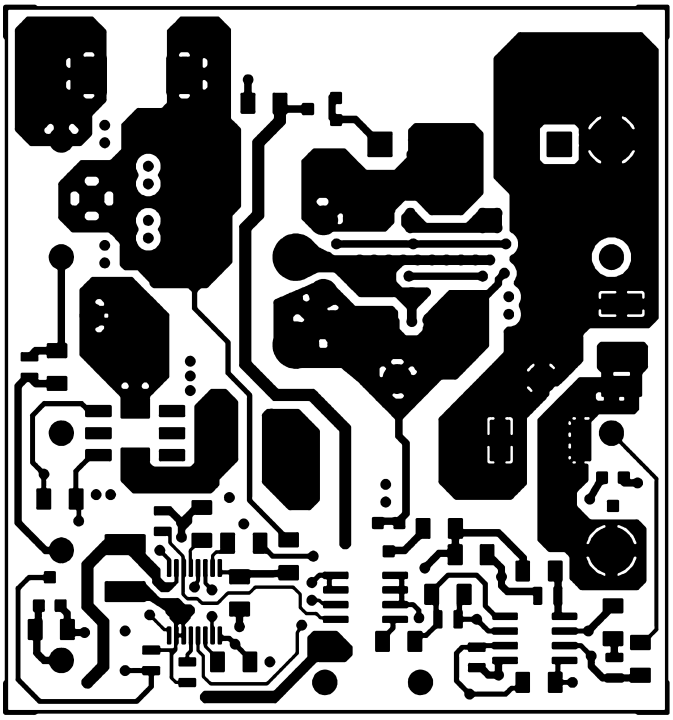

Figure 12.

Copyright © 2005–2013, Texas Instruments Incorporated

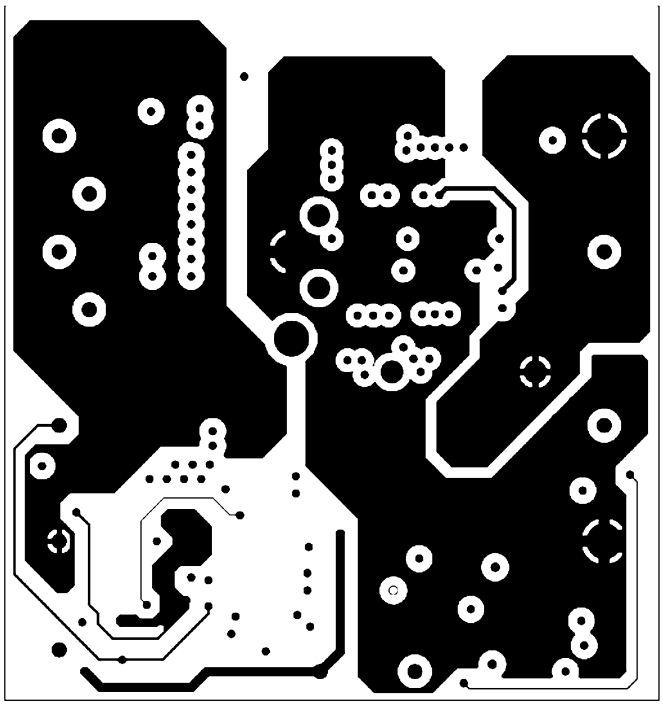

Figure 13.

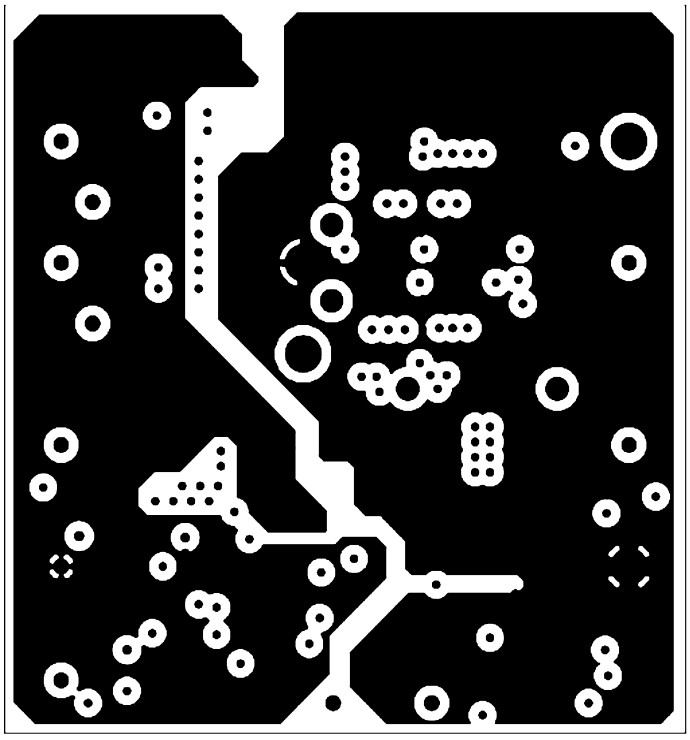

Figure 14.

Copyright © 2005–2013, Texas Instruments Incorporated

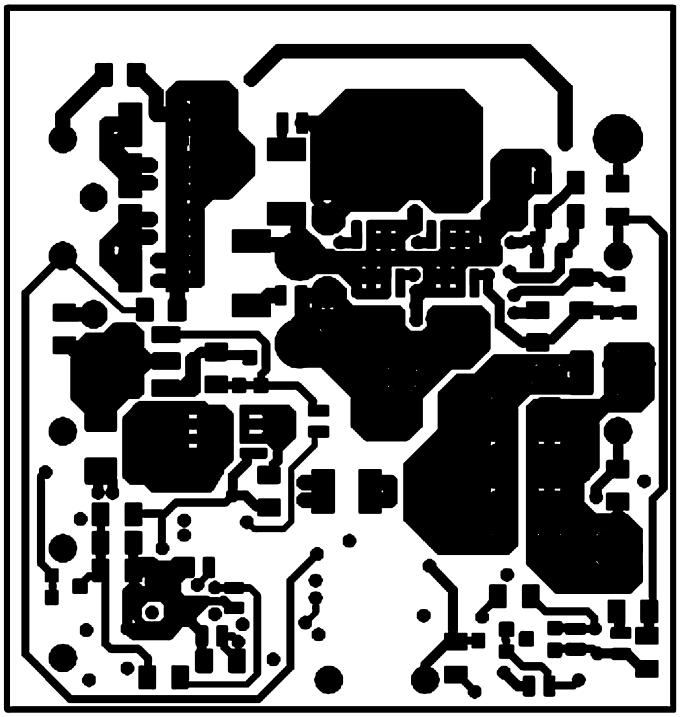

Figure 15.

Copyright © 2005–2013, Texas Instruments Incorporated

IMPORTANT NOTICE

Texas Instruments Incorporated and its subsidiaries (TI) reserve the right to make corrections, enhancements, improvements and other changes to its semiconductor products and services per JESD46, latest issue, and to discontinue any product or service per JESD48, latest issue. Buyers should obtain the latest relevant information before placing orders and should verify that such information is current and complete. All semiconductor products (also referred to herein as “components”) are sold subject to TI’s terms and conditions of sale supplied at the time of order acknowledgment.

TI warrants performance of its components to the specifications applicable at the time of sale, in accordance with the warranty in TI’s terms and conditions of sale of semiconductor products. Testing and other quality control techniques are used to the extent TI deems necessary to support this warranty. Except where mandated by applicable law, testing of all parameters of each component is not necessarily performed.

TI assumes no liability for applications assistance or the design of Buyers’ products. Buyers are responsible for their products and applications using TI components. To minimize the risks associated with Buyers’ products and applications, Buyers should provide adequate design and operating safeguards.

TI does not warrant or represent that any license, either express or implied, is granted under any patent right, copyright, mask work right, or other intellectual property right relating to any combination, machine, or process in which TI components or services are used. Information published by TI regarding third-party products or services does not constitute a license to use such products or services or a warranty or endorsement thereof. Use of such information may require a license from a third party under the patents or other intellectual property of the third party, or a license from TI under the patents or other intellectual property of TI.

Reproduction of significant portions of TI information in TI data books or data sheets is permissible only if reproduction is without alteration and is accompanied by all associated warranties, conditions, limitations, and notices. TI is not responsible or liable for such altered documentation. Information of third parties may be subject to additional restrictions.

Resale of TI components or services with statements different from or beyond the parameters stated by TI for that component or service voids all express and any implied warranties for the associated TI component or service and is an unfair and deceptive business practice. TI is not responsible or liable for any such statements.

Buyer acknowledges and agrees that it is solely responsible for compliance with all legal, regulatory and safety-related requirements concerning its products, and any use of TI components in its applications, notwithstanding any applications-related information or support that may be provided by TI. Buyer represents and agrees that it has all the necessary expertise to create and implement safeguards which anticipate dangerous consequences of failures, monitor failures and their consequences, lessen the likelihood of failures that might cause harm and take appropriate remedial actions. Buyer will fully indemnify TI and its representatives against any damages arising out of the use of any TI components in safety-critical applications.

In some cases, TI components may be promoted specifically to facilitate safety-related applications. With such components, TI’s goal is to help enable customers to design and create their own end-product solutions that meet applicable functional safety standards and requirements. Nonetheless, such components are subject to these terms.

No TI components are authorized for use in FDA Class III (or similar life-critical medical equipment) unless authorized officers of the parties have executed a special agreement specifically governing such use.

Only those TI components which TI has specifically designated as military grade or “enhanced plastic” are designed and intended for use in military/aerospace applications or environments. Buyer acknowledges and agrees that any military or aerospace use of TI components which have ***not*** been so designated is solely at the Buyer's risk, and that Buyer is solely responsible for compliance with all legal and regulatory requirements in connection with such use.

TI has specifically designated certain components as meeting ISO/TS16949 requirements, mainly for automotive use. In any case of use of non-designated products, TI will not be responsible for any failure to meet ISO/TS16949.

Products		**Applications**	
Audio	www.ti.com/audio	Automotive and Transportation	www.ti.com/automotive
Amplifiers	amplifier.ti.com	Communications and Telecom	www.ti.com/communications
Data Converters	dataconverter.ti.com	Computers and Peripherals	www.ti.com/computers
DLP® Products	www.dlp.com	Consumer Electronics	www.ti.com/consumer-apps
DSP	dsp.ti.com	Energy and Lighting	www.ti.com/energy
Clocks and Timers	www.ti.com/clocks	Industrial	www.ti.com/industrial
Interface	interface.ti.com	Medical	www.ti.com/medical
Logic	logic.ti.com	Security	www.ti.com/security
Power Mgmt	power.ti.com	Space, Avionics and Defense	www.ti.com/space-avionics-defense
Microcontrollers	microcontroller.ti.com	Video and Imaging	www.ti.com/video
RFID	www.ti-rfid.com		
OMAP Applications Processors	www.ti.com/omap	**TI E2E Community**	e2e.ti.com
Wireless Connectivity	www.ti.com/wirelessconnectivity		

Mailing Address: Texas Instruments, Post Office Box 655303, Dallas, Texas 75265
Copyright © 2013, Texas Instruments Incorporated