# LM4875 Boomer® Audio Power Amplifier Series 750 mW Audio Power Amplifier with DC Volume Control and Headphone Switch

**Check for Samples: LM4875**

## FEATURES

- **Precision DC Voltage Volume Control**
- **Headphone Amplifier Mode**
- **"Click and Pop" Suppression**
- **Shutdown Control When Volume Control Pin Is Low**
- **Thermal Shutdown Protection**

## APPLICATIONS

- **GSM Phones and Accessories, DECT, Office Phones**
- **Hand Held Radio**
- **Other Portable Audio Devices**

## KEY SPECIFICATIONS

- **$P_O$ at 1.0% THD+N Into 8Ω; 750 mW (typ)**
- **$P_O$ at 10% THD+N Into 8Ω; 1 W (typ)**
- **Shutdown Current; 0.7µA(typ)**
- **Supply Voltage Range; 2.7V to 5.5 V**

## DESCRIPTION

The LM4875 is a mono bridged audio power amplifier with DC voltage volume control. The LM4875 is capable of delivering 750mW of continuous average power into an 8Ω load with less than 1% THD when powered by a 5V power supply. Switching between bridged speaker mode and headphone (single ended) mode is accomplished using the headphone sense pin. To conserve power in portable applications, the LM4875's micropower shutdown mode ($I_Q$ = 0.7µA, typ) is activated when less than 300mV is applied to the DC Vol/$\overline{SD}$ pin.

Boomer audio power amplifiers are designed specifically to provide high power audio output while maintaining high fidelity. They require few external components and operate on low supply voltages.

## TYPICAL APPLICATION

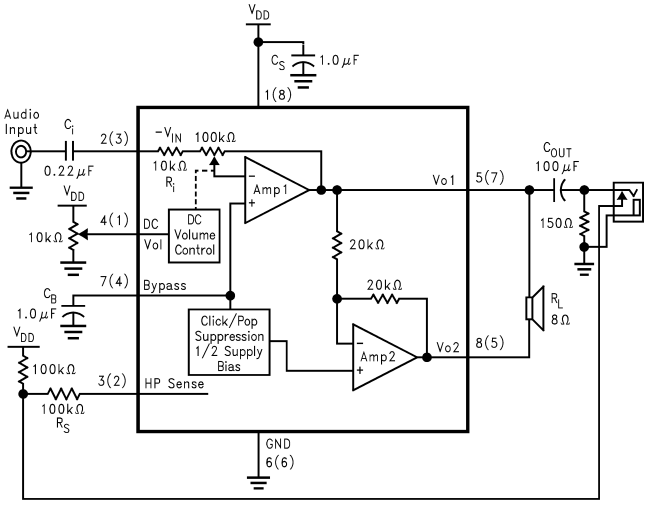


**Figure 1. Typical Audio Amplifier Application Circuit**

## CONNECTION DIAGRAM

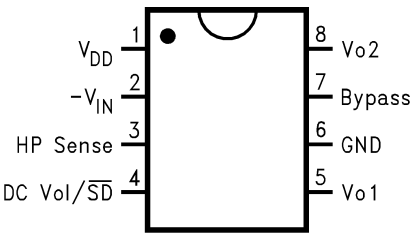


**Small Outline Package (SOIC)**
**Mini Small Outline Package (VSSOP)**
**Top View**
**See Package Number D, DGK**

Please be aware that an important notice concerning availability, standard warranty, and use in critical applications of Texas Instruments semiconductor products and disclaimers thereto appears at the end of this data sheet.

All trademarks are the property of their respective owners.

PRODUCTION DATA information is current as of publication date. Products conform to specifications per the terms of the Texas Instruments standard warranty. Production processing does not necessarily include testing of all parameters.

Copyright © 2002–2013, Texas Instruments Incorporated

These devices have limited built-in ESD protection. The leads should be shorted together or the device placed in conductive foam during storage or handling to prevent electrostatic damage to the MOS gates.

## ABSOLUTE MAXIMUM RATINGS(1)(2)

| | | |
|---|---|---|
| Supply Voltage | | 6.0V |
| Storage Temperature | | −65°C to +150°C |
| Input Voltage | | −0.3V to $V_{DD}$ +0.3V |
| Power Dissipation(3) | | Internally Limited |
| ESD Susceptibility(4) | | 2000V |
| ESD Susceptibility(5) | | 200V |
| Junction Temperature | | 150°C |
| Soldering Information | Vapor Phase (60 sec.) | 215°C |
| | Infrared (15 sec.) | 220°C |
| Thermal Resistance | $\theta_{JC}$ (D) | 35°C/W |
| | $\theta_{JA}$ (D) | 150°C/W |
| | $\theta_{JC}$ (DGK) | 56°C/W |
| | $\theta_{JA}$ (DGK) | 190°C/W |

(1) Absolute Maximum Ratings indicate limits beyond which damage to the device may occur. Operating Ratings indicate conditions for which the device is functional, but do not ensure specific performance limits. Electrical Characteristics state DC and AC electrical specifications under particular test conditions that ensure specific performance limits. This assumes that the device operates within the Operating Ratings. Specifications are not ensured for parameters where no limit is given. The typical value, however, is a good indication of device performance.
(2) If Military/Aerospace specified devices are required, please contact the Texas Instruments Sales Office/ Distributors for availability and specifications.
(3) The maximum power dissipation must be derated at elevated temperatures and is dictated by $T_{JMAX}$, $\theta_{JA}$, and the ambient temperature $T_A$. The maximum allowable power dissipation is $P_{DMAX} = (T_{JMAX} - T_A)/\theta_{JA}$ or the number given in the Absolute Maximum Ratings, whichever is lower. For the LM4875M, $T_{JMAX}$ = 150°C.
(4) Human body model, 100pF discharged through a 1.5kΩ resistor.
(5) Machine Model, 220pF–240pF discharged through all pins.

## OPERATING RATINGS

| | | |
|---|---|---|
| Temperature Range | $T_{MIN} \le T_A \le T_{MAX}$ | −40°C ≤ $T_A$ ≤ +85°C |
| Supply Voltage | | 2.7V ≤ $V_{DD}$ ≤ 5.5V |


Copyright © 2002–2013, Texas Instruments Incorporated

## ELECTRICAL CHARACTERISTICS[1][2]

The following specifications apply for $V_{DD}$ = 5V, unless otherwise specified. Limits apply for $T_A$ = 25°C.

| Symbol | Parameter | Conditions | LM4875 | | | |
|---|---|---|---|---|---|---|
| | | | Min[3] | Typical[4] | Max[3] | Units |
| $V_{DD}$ | Supply Voltage | | 2.7 | | 5.5 | V |
| $I_{DD}$ | Quiescent Power Supply Current | $V_{IN}$ = 0V, $I_O$ = 0A, HP Sense = 0V | | 4 | 7 | mA |
| | | $V_{IN}$ = 0V, $I_O$ - 0A, HP Sense = 5V | | 3.5 | 6 | mA |
| $I_{SD}$ | Shutdown Current | $V_{PIN4} \leq$ 0.3V | | 0.7 | | µA |
| $V_{OS}$ | Output Offset Voltage | $V_{IN}$ = 0V | | 5 | 50 | mV |
| $P_O$ | Output Power | THD = 1% (max), HP Sense < 0.8V, f = 1kHz, $R_L$ = 8Ω | 500 | 750 | | mW |
| | | THD = 10% (max), HP Sense < 0.8V, f = 1kHz, $R_L$ = 8Ω | | 1.0 | | W |
| | | THD + N = 1%, HP Sense > 4V, f = 1kHz, $R_L$ = 32Ω | | 80 | | mW |
| | | THD = 10%, HP Sense > 4V, f = 1kHz, $R_L$ = 32Ω | | 110 | | mW |
| THD+N | Total Harmonic Distortion + Noise | $P_O$ = 300 mWrms, f = 20Hz–20kHz, $R_L$ = 8Ω | | 0.6 | | % |
| PSRR | Power Supply Rejection Ratio | $V_{RIPPLE}$ = 200mVrms, $R_L$ = 8Ω, $C_B$ = 1.0 µF, f = 1kHz | | 50 | | dB |
| $Gain_{RANGE}$ | Single-Ended Gain Range | Gain with $V_{PIN4} \geq$ 4.0V, (80% of $V_{DD}$) | 18.8 | 20 | | dB |
| | | Gain with $V_{PIN4} \leq$ 0.9V, (20% of $V_{DD}$) | −70 | −72 | | dB |
| $V_{IH}$ | HP Sense High Input Voltage | | 4 | | | V |
| $V_{IL}$ | HP Sense Low Input Voltage | | | | 0.8 | V |

(1) All voltages are measured with respect to the ground pin, unless otherwise specified.
(2) Absolute Maximum Ratings indicate limits beyond which damage to the device may occur. Operating Ratings indicate conditions for which the device is functional, but do not ensure specific performance limits. Electrical Characteristics state DC and AC electrical specifications under particular test conditions that ensure specific performance limits. This assumes that the device operates within the Operating Ratings. Specifications are not ensured for parameters where no limit is given. The typical value, however, is a good indication of device performance.
(3) Limits are ensured to AOQL (Average Outgoing Quality Level).
(4) Typicals are measured at 25°C and represent the parametric norm.

## EXTERNAL COMPONENTS DESCRIPTION

(Figure 1)

| Components | | Functional Description |
|---|---|---|
| 1. | $C_i$ | Input coupling capacitor blocks DC voltage at the amplifier's input terminals. It also creates a highpass filter with the internal $R_i$ that produces an $f_c = 1/(2\pi R_i C_i)$ ($10k\Omega \leq R_i \leq 100k\Omega$). Refer to the APPLICATION INFORMATION section, PROPERLY SELECTING EXTERNAL COMPONENTS, for an explanation of determining the value of $C_i$. |
| 2. | $C_S$ | The supply bypass capacitor. Refer to the POWER SUPPLY BYPASSING section for information about properly placing, and selecting the value of, this capacitor. |
| 3. | $C_B$ | The capacitor, $C_B$, filters the half-supply voltage present on the BYPASS pin. Refer to the APPLICATION INFORMATION Section,PROPERLY SELECTING EXTERNAL COMPONENTS, for information concerning proper placement and selecting $C_B$'s value. |

Copyright © 2002–2013, Texas Instruments Incorporated

## TYPICAL PERFORMANCE CHARACTERISTICS

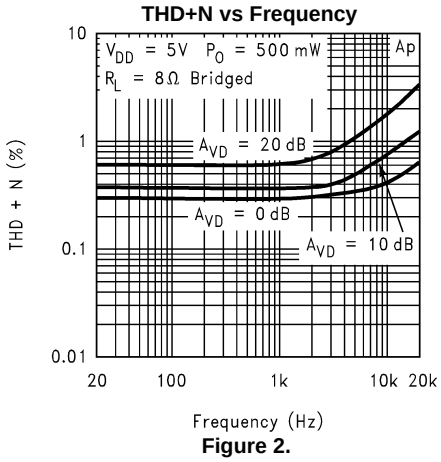


**Figure 2.**

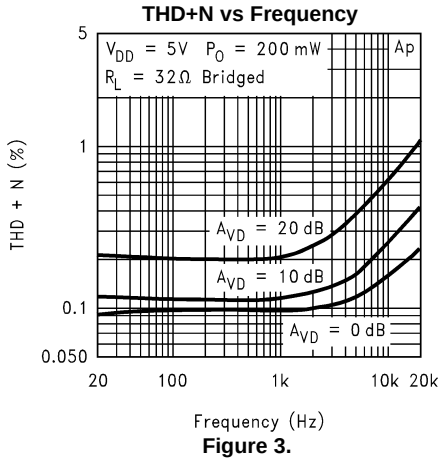


**Figure 3.**

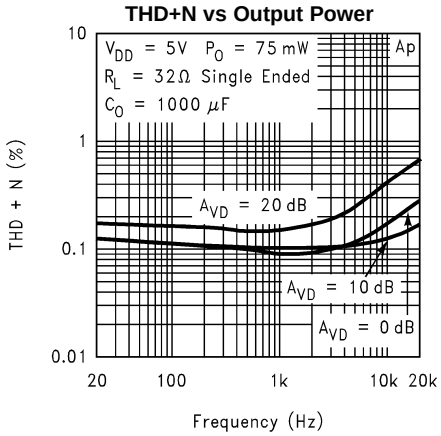


**Figure 4.**

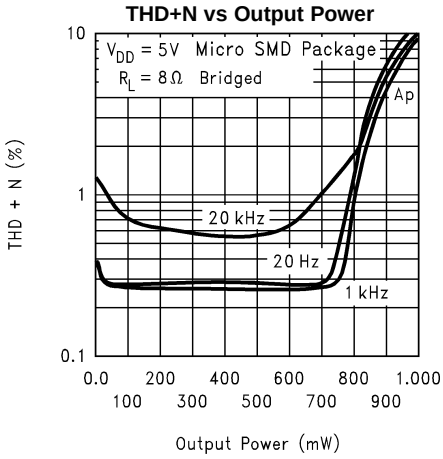


**Figure 5.**

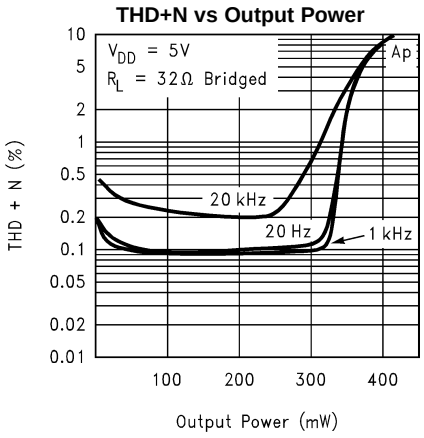


**Figure 6.**

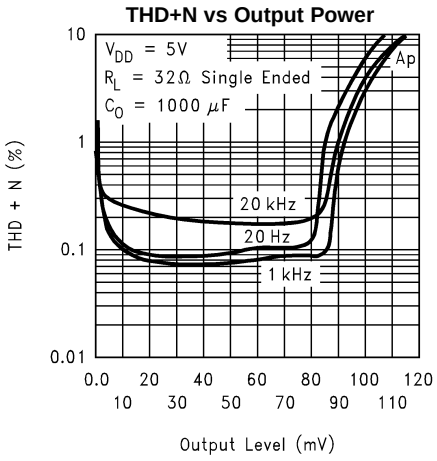


**Figure 7.**


Copyright © 2002–2013, Texas Instruments Incorporated

## TYPICAL PERFORMANCE CHARACTERISTICS (continued)

**Power Dissipation vs Load Resistance**

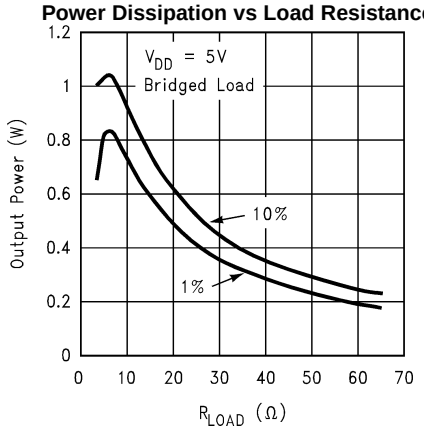


**Figure 8.**

**Power Dissipation vs Output Power**

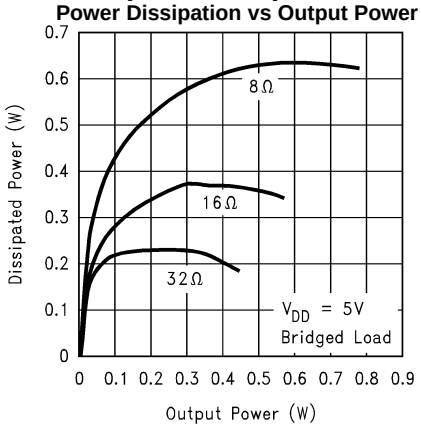


**Figure 9.**

**Power Derating Curve**

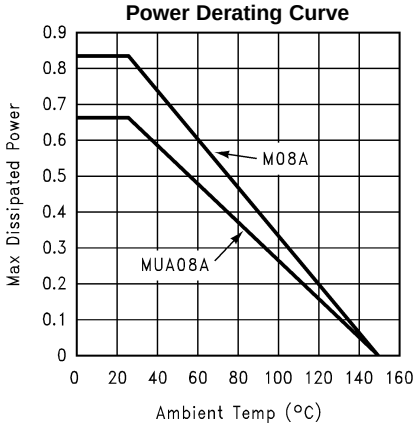


**Figure 10.**

**Clipping Voltage vs RL**

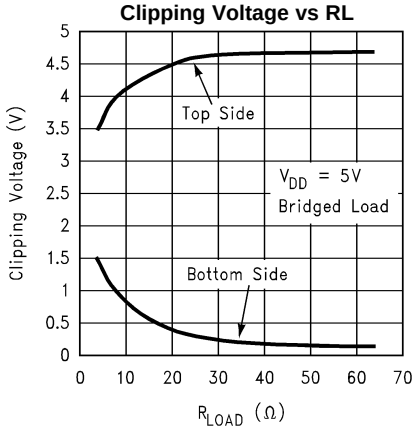


**Figure 11.**

**Noise Floor**

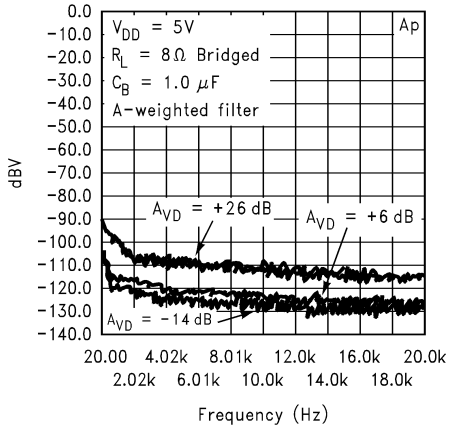


**Figure 12.**

**Frequency Response vs Input Capacitor Size**

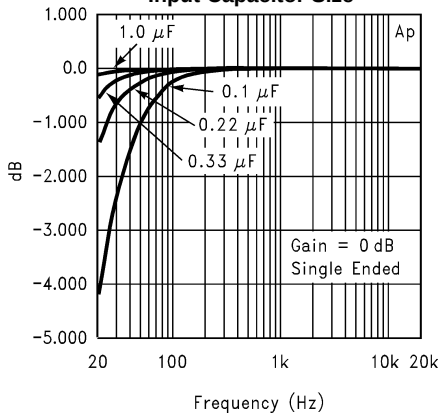


**Figure 13.**

Copyright © 2002–2013, Texas Instruments Incorporated

## TYPICAL PERFORMANCE CHARACTERISTICS (continued)

**Power Supply Rejection Ratio**

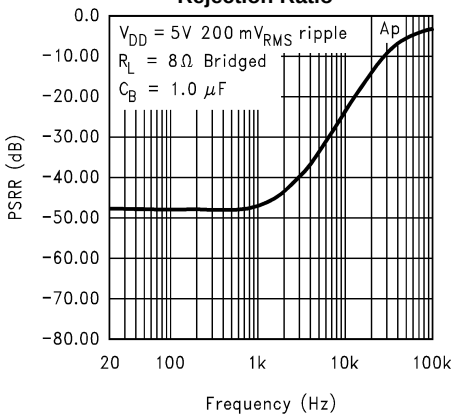


**Figure 14.**

**Attenuation Level vs DC-Vol Amplitude**

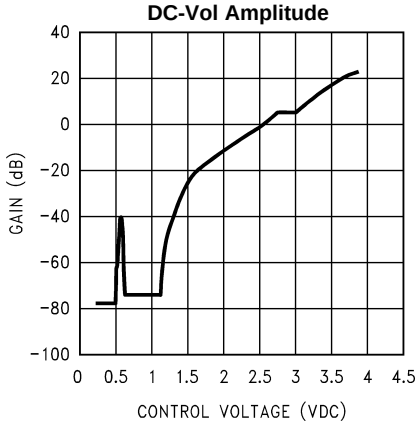


**Figure 15.**

**THD+N vs Frequency**

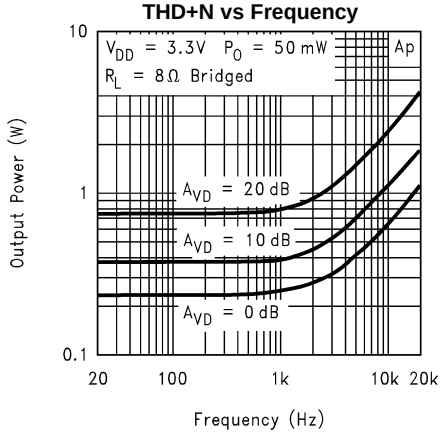


**Figure 16.**

**THD+N vs Frequency**

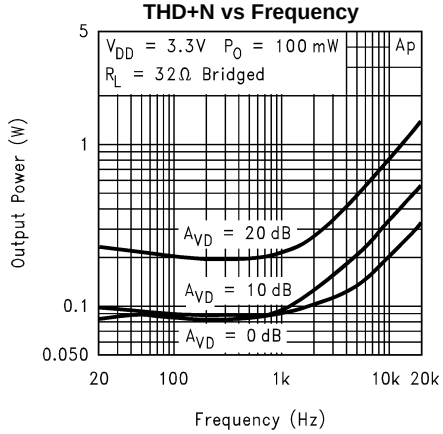


**Figure .**

**THD+N vs Frequency**

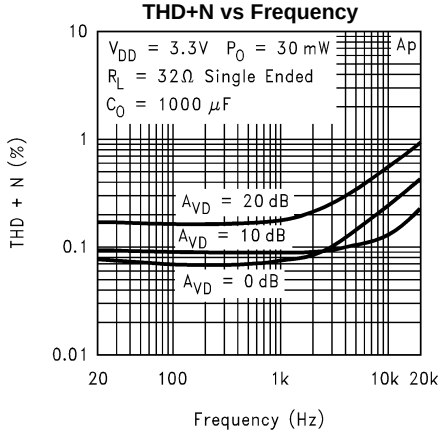


**Figure 17.**

**THD+N vs Output Power**

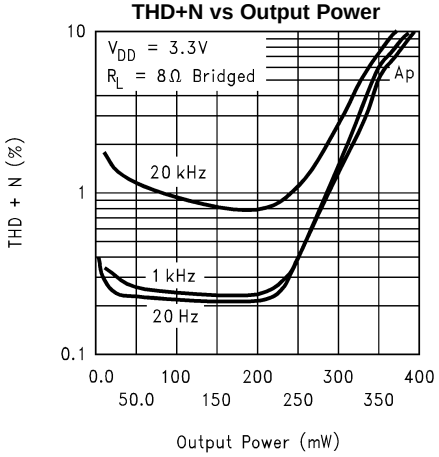


**Figure 18.**


Copyright © 2002–2013, Texas Instruments Incorporated

## TYPICAL PERFORMANCE CHARACTERISTICS (continued)

**THD+N vs Output Power**

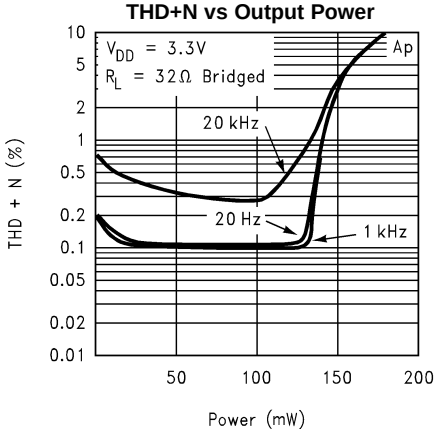


**Figure 19.**

**THD+N vs Output Power**

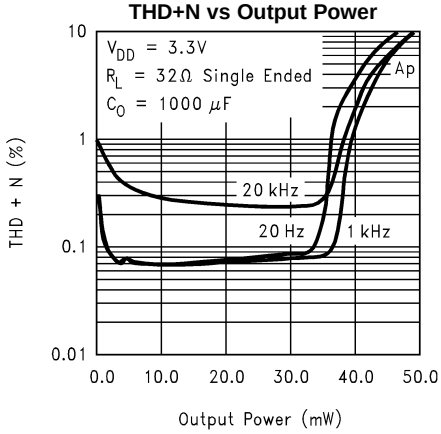


**Figure 20.**

**Output Power vs Load Resistance**

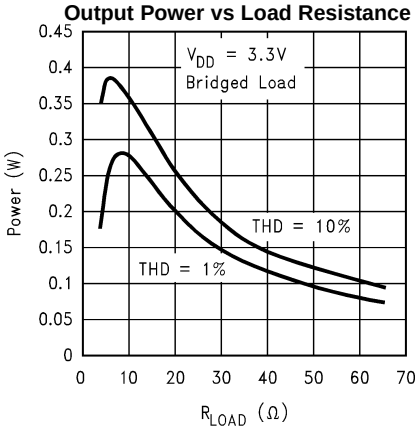


**Figure 21.**

**Clipping Voltage vs Supply Voltage**

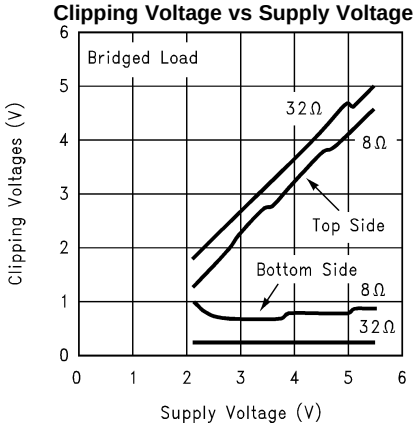


**Figure 22.**

**Output Power vs Supply Voltage**

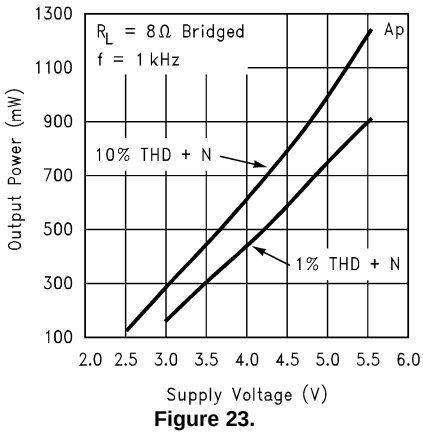


**Figure 23.**

Copyright © 2002–2013, Texas Instruments Incorporated

## TYPICAL PERFORMANCE CHARACTERISTICS (continued)

**Output Power vs Supply Voltage**

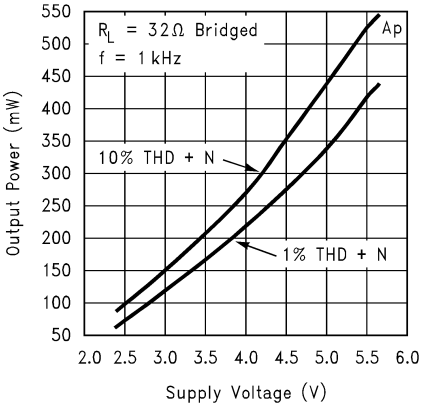


**Figure 24.**

**Supply Current vs Supply Voltage**

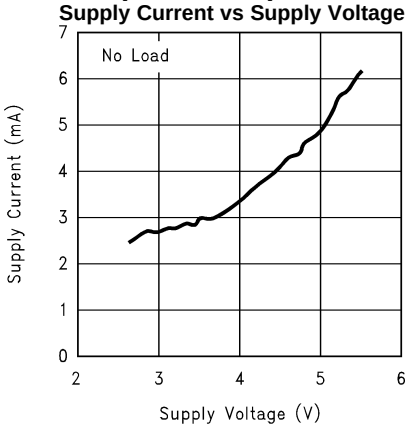


**Figure 25.**


Copyright © 2002–2013, Texas Instruments Incorporated

# APPLICATION INFORMATION

## BRIDGE CONFIGURATION EXPLANATION

As shown in Figure 1, the LM4875 consists of two operational amplifiers internally. An external DC voltage sets the closed-loop gain of the first amplifier, whereas two internal 20kΩ resistors set the second amplifier's gain at -1. The LM4875 can be used to drive a speaker connected between the two amplifier outputs or a monaural headphone connected between $V_O1$ and GND.

Figure 1 shows that the output of Amp1 serves as the input to Amp2. This results in both amplifiers producing signals that are identical in magnitude, but 180° out of phase.

Taking advantage of this phase difference, a load placed between $V_O1$ and $V_O2$ is driven differentially (commonly referred to as “bridge mode“ ). This mode is different from single-ended driven loads that are connected between a single amplifier's output and ground.

Bridge mode has a distinct advantage over the single-ended configuration: its differential drive to the load doubles the output swing for a specified supply voltage. This results in four times the output power when compared to a single-ended amplifier under the same conditions. This increase in attainable output assumes that the amplifier is not current limited or the output signal is not clipped.

Another advantage of the differential bridge output is no net DC voltage across load. This results from biasing $V_O1$ and $V_O2$ at half-supply. This eliminates the coupling capacitor that single supply, single-ended amplifiers require. Eliminating an output coupling capacitor in a single-ended configuration forces a single supply amplifier's half-supply bias voltage across the load. The current flow created by the half-supply bias voltage increases internal IC power dissipation and may permanently damage loads such as speakers.

## POWER DISSIPATION

Power dissipation is a major concern when designing a successful bridged or single-ended amplifier. Equation 1 states the maximum power dissipation point for a single-ended amplifier operating at a given supply voltage and driving a specified output load.

$$P_{DMAX} = (V_{DD})^2/(2\pi^2 R_L) \quad \text{Single-Ended} \tag{1}$$

However, a direct consequence of the increased power delivered to the load by a bridge amplifier is an increase in internal power dissipation point for a bridge amplifier operating at the same given conditions.

$$P_{DMAX} = 4*(V_{DD})^2/(2\pi^2 R_L) \quad \text{Bridge Mode} \tag{2}$$

The LM4875 has two operational amplifiers in one package and the maximum internal power dissipation is 4 times that of a single-ended amplifier. However, even with this substantial increase in power dissipation, the LM4875 does not require heatsinking. From Equation 2, assuming a 5V power supply and an 8Ω load, the maximum power dissipation point is 633 mW. The maximum power dissipation point obtained from Equation 2 must not be greater than the power dissipation that results from Equation 3:

$$P_{DMAX} = (T_{JMAX} – T_A)/\theta_{JA} \tag{3}$$

For the SOIC package, $\theta_{JA}$ = 150°C/W. The VSSOP package has a 190°C/W $\theta_{JA}$. $T_{JMAX}$ = 150°C for the LM4875. For a given ambient temperature $T_A$, Equation 3 can be used to find the maximum internal power dissipation supported by the IC packaging. If the result of Equation 2 is greater than that of Equation 3, then either decrease the supply voltage, increase the load impedance, or reduce the ambient temperature. For a typical application using the SOIC packaged LM4875, a 5V power supply, and an 8Ω load, the maximum ambient temperature that does not violate the maximum junction temperature is approximately 55°C. The maximum ambient temperature for the VSSOP package with the same conditions is approximately 30°C. These results further assume that a device is a surface mount part operating around the maximum power dissipation point. Since internal power dissipation is a function of output power, higher ambient temperatures are allowed as output power decreases. Refer to the TYPICAL PERFORMANCE CHARACTERISTICS curves for power dissipation information at lower output power levels.

Copyright © 2002–2013, Texas Instruments Incorporated

## POWER SUPPLY BYPASSING

As with any power amplifier, proper supply bypassing is critical for low noise performance and high power supply rejection. The capacitors connected to the bypass and power supply pins should be placed as close to the LM4875 as possible. The capacitor connected between the bypass pin and ground improves the internal bias voltage's stability, producing improved PSRR. The improvements to PSRR increase as the bypass pin capacitor value increases. Typical applications employ a 5V regulator with 10µF and a 0.1µF filter capacitors that aid in supply stability. Their presence, however does not eliminate the need for bypassing the supply nodes of the LM4875. The selection of bypass capacitor values, especially $C_B$, depends on desired PSRR requirements, click and pop performance (as explained in the section, PROPERLY SELECTING EXTERNAL COMPONENTS), system cost, and size constraints.

## DC VOLTAGE VOLUME CONTROL

The LM4875's internal volume control is controlled by the DC voltage applied its DC Vol/$\overline{SD}$ pin (pin 4). The volume control's input range is from GND to $V_{DD}$. A graph showing a typical volume response versus input control voltage is shown in the TYPICAL PERFORMANCE CHARACTERISTICS section. The DC Vol/$\overline{SD}$ pin also functions as the control pin for the LM4875's micropower shutdown feature. See the MUTE AND SHUTDOWN FUNCTION section for more information.

Like all volume controls, the Lm4875's internal volume control is set while listening to an amplified signal that is applied to an external speaker. The actual voltage applied to the DC Vol/$\overline{SD}$ pin is a result of the volume a listener desires. As such, the volume control is designed for use in a feedback system that includes human ears and preferences. This feedback system operates quite well without the need for accurate gain. The user simply sets the volume to the desired level as determined by their ear, without regard to the actual DC voltage that produces the volume. Therefore, the accuracy of the volume control is not critical, as long as volume changes monotonically and step size is small enough to reach a desired volume that is not too loud or too soft. Since gain accuracy is not critical, there may be a volume variation from part-to-part even with the same applied DC control voltage. The gain of a given LM4875 can be set with a fixed external voltage, but another LM4875 may require a different control voltage to achieve the same gain. Figure 26 is a curve showing the volume variation of seven typical LM4875s as the voltage applied to the DC Vol/$\overline{SD}$ pin is varied. For gains between -20dB and +16dB, the typical part-to-part variation is typically ±1dB for a given control voltage.

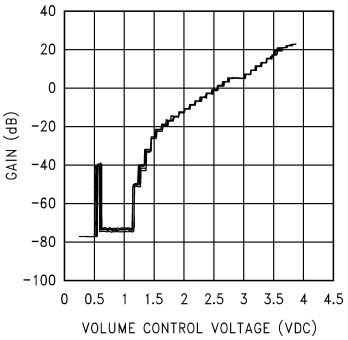


**Figure 26. Typical Part-to-Part Gain Variation as a Function of DC-Vol Control Voltage**

## MUTE AND SHUTDOWN FUNCTION

The LM4875's mute and shutdown functions are controlled through the DC Vol/$\overline{SD}$ pin. Mute is activated by applying a voltage in the range of 500mV to 1V. A typical attenuation of 75dB is achieved is while mute is active. The LM4875's micropower shutdown mode turns off the amplifier's bias circuitry. The micropower shutdown mode is activated by applying less than 300$mV_{DC}$ to the DC Vol/$\overline{SD}$ pin. When shutdown is active, they supply current is reduced to 0.7µA (typ). A degree of uncertainty exists when the voltage applied to the DC Vol/$\overline{SD}$ pin is in the range of 300mV to 500mV. The LM4875 can be in mute, still fully powered, or in micropower shutdown and fully muted. In mute mode, the LM4875 draws the typical quiescent supply current. The DC Vol/$\overline{SD}$ pin should be tied to GND for best shutdown mode performance. As the DC Vol/$\overline{SD}$ is increased above 0.5V the amplifier will follow the attenuation curve in TYPICAL PERFORMANCE CHARACTERISTICS .


Copyright © 2002–2013, Texas Instruments Incorporated

### HP-Sense FUNCTION

Applying a voltage between 4V and $V_{CC}$ to the LM4875's HP-Sense headphone control pin turns off Amp2 and mutes a bridged-connected load. Quiescent current consumption is reduced when the IC is in this single-ended mode.

Figure 27 shows the implementation of the LM4875's headphone control function. With no headphones connected to the headphone jack, the R1-R2 voltage divider sets the voltage applied to the HP-Sense pin (pin 3) at approximately 50mV. This 50mV enables the LM4875 and places it in bridged mode operation.

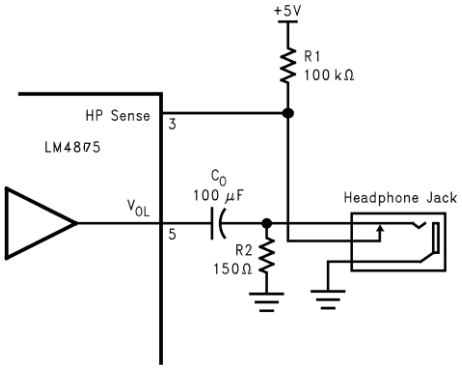


**Figure 27. Headphone Circuit**

While the LM4875 operates in bridged mode, the DC potential across the load is essentially 0V. Since the HP-Sense threshold is set at 4V, even in an ideal situation, the output swing cannot cause a false single-ended trigger. Connecting headphones to the headphone jack disconnects the headphone jack contact pin from $V_O1$ and allows R1 to pull the HP Sense pin up to $V_{CC}$. This enables the headphone function, turns off Amp2, and mutes the bridged speaker. The amplifier then drives the headphones, whose impedance is in parallel with resistor R2. Resistor R2 has negligible effect on output drive capability since the typical impedance of headphones is 32Ω. The output coupling capacitor blocks the amplifier's half supply DC voltage, protecting the headphones.

A microprocessor or a switch can replace the headphone jack contact pin. When a microprocessor or switch applies a voltage greater than 4V to the HP Sense pin, a bridge-connected speaker is muted and Amp1 drives the headphones.

## PROPERLY SELECTING EXTERNAL COMPONENTS

Optimizing the LM4875's performance requires properly selecting external components. Though the LM4875 operates well when using external components having wide tolerances, the best performance is achieved by optimizing component values.

### Input Capacitor Value Selection

Amplification of the lowest audio frequencies requires high value input coupling capacitors. These high value capacitors can be expensive and may compromise space efficiency in portable designs. In many cases, however, the speakers used in portable systems, whether internal or external, have little ability to reproduce signals below 150Hz. In application 5 using speakers with this limited frequency response, a large input capacitor will offer little improvement in system performance.

Figure 1 shows that the nominal input impedance ($R_{IN}$) is 10kΩ at maximum volume and 110kΩ at minimum volume. Together, the input capacitor, $C_i$, and $R_{IN}$, produce a -3dB high pass filter cutoff frequency that is found using Equation 4.

$$f_{-3\,dB} = \frac{1}{2\pi R_{IN} C_i} \tag{4}$$

As the volume changes from minimum to maximum, $R_{IN}$ decrease from 110kΩ to 10kΩ. Equation 4 reveals that the -3dB frequency will increase as the volume increases. The nominal value of $C_i$ for lowest desired frequency response should be calculated with $R_{IN}$ = 10kΩ . As an example when using a speaker with a low frequency limit of 150Hz, $C_i$, using Equation 4 is 0.1µF. The 0.22µF $C_i$ shown in Figure 1 is optimized for a speaker whose response extends down to 75Hz.

### Bypass Capacitor Value Selection

Besides minimizing the input capacitor size, careful consideration should be paid to value of the bypass capacitor $C_B$. Since $C_B$ determines how fast the LM4875 turns on, its value is the most critical when minimizing turn-on pops. The slower the LM4875's outputs ramp to their quiescent DC voltage (nominally $V_{DD}/2$), the smaller the turn-on pop. Choosing $C_B$ equal to 1.0µF, along with a small value of $C_i$ (in the range of 0.1µF to 0.39µF), produces a clickless and popless shutdown function. Choosing $C_i$ as small as possible helps minimize clicks and pops.

## CLICK AND POP CIRCUITRY

The LM4875 contains circuitry that minimizes turn-on and shutdown transients or "clicks and pops". For this discussion, turn-on refers to either applying the power supply voltage or when the shutdown mode is deactivated. While the power supply is ramping to its final value, the LM4875's internal amplifiers are configured as unity gain buffers. An internal current source changes the voltage of the bypass pin in a controlled, linear manner. Ideally, the input and outputs track the voltage applied to the bypass pin. The gain of the internal amplifiers remains unity until the voltage on the bypass pin reaches 1/2 $V_{DD}$. As soon as the voltage on the bypass pin is stable, the device becomes fully operational and the gain is set by the external voltage applied to the DC Vol/$\overline{SD}$ pin.

Although the bypass pin current cannot be modified, changing the size of $C_B$ alters the device's turn-on time and the magnitude of "clicks and pops". Increasing the value of $C_B$ reduces the magnitude of turn-on pops. However, this presents a tradeoff: as the size of $C_B$ increases, the turn-on time increases. There is a linear relationship between the size of CB and the turn-on time. Shown below are some typical turn-on times for various values of $C_B$:

| $C_B$ | $T_{ON}$ |
|---|---|
| 0.01µF | 3ms |
| 0.1µF | 30ms |
| 0.22µF | 65ms |
| 0.47µF | 135ms |
| 1.0µF | 280ms |

In order eliminate "clicks and pops", all capacitors must be discharged before turn-on. Rapidly switching $V_{DD}$ may not allow the capacitors to fully discharge, which may cause "clicks and pops". In a single-ended configuration, the output coupling capacitor, $C_{OUT}$, is of particular concern. This capacitor discharges through an internal 20kΩ resistor. Depending on the size of $C_{OUT}$, the time constant can be relatively large. To reduce transients in single-ended mode, an external 1kΩ - 5kΩ resistor can be placed in parallel with the internal 20kΩ resistor. The tradeoff for using this resistor is increased quiescent current.

## RECOMMENDED PRINTED CIRCUIT BOARD LAYOUT

Figure 28 through Figure 30 show the recommended two-layer PC board layout that is optimized for the SOIC-8 packaged LM4875 and associated external components. Figure 31 through Figure 33 show the recommended two-layer PC board layout for the VSSOP packaged LM4875. Both layouts are designed for use with an external 5V supply, 8Ω speakers, and 8Ω - 32Ω headphones. The schematic for both recommended PC board layouts is Figure 1.

Both circuit boards are easy to use. Apply a 5V supply voltage and ground to the board's $V_{DD}$ and GND pads, respectively. Connect a speaker with an 8Ω minimum impedance between the board's -OUT and +OUT pads. For headphone use, the layout has provisions for a headphone jack, J1. When a jack is connected as shown, inserting a headphone plug automatically switches off the external speaker.


Copyright © 2002–2013, Texas Instruments Incorporated

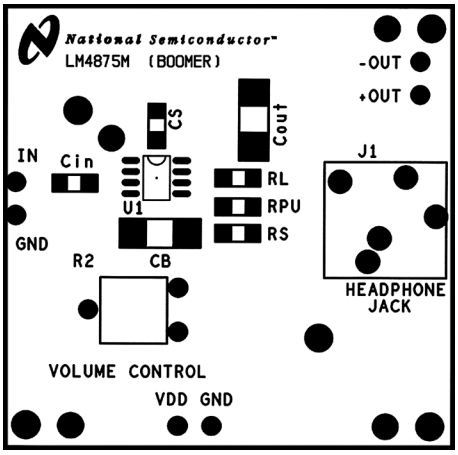


**Figure 28. Recommended SOIC PC Board Layout: Component Side Silkscreen**

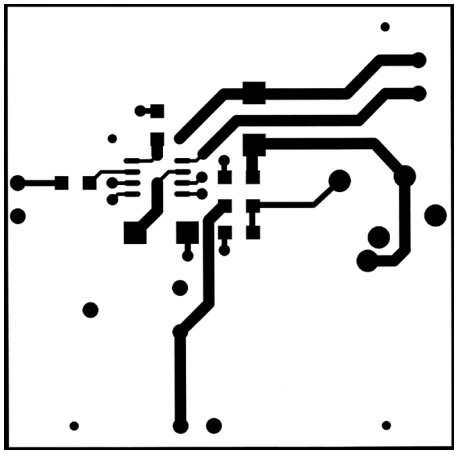

**Figure 29. Recommended SOIC PC Board Layout: Component Side Layout**

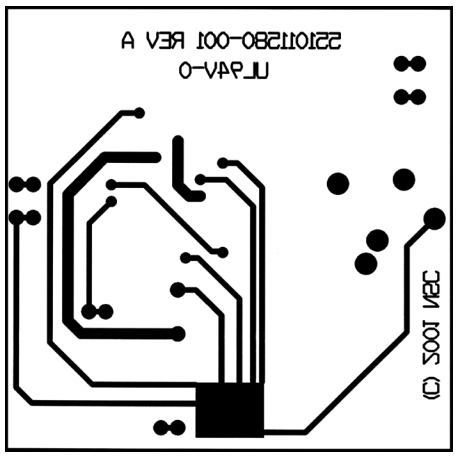

**Figure 30. Recommended SOIC PC Board Layout: Bottom Side Layout**

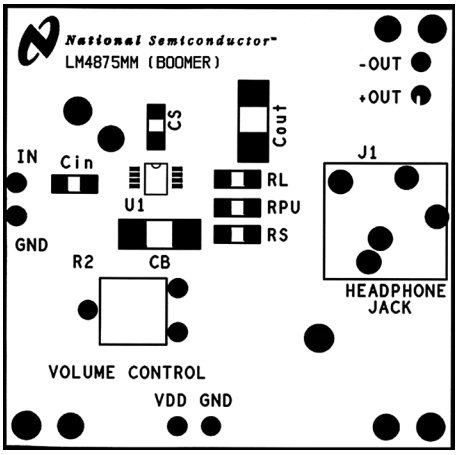


**Figure 31. Recommended VSSOP PC Board Layout: Component Side Silkscreen**

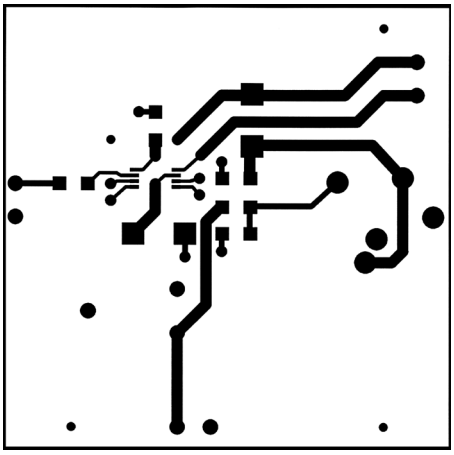

**Figure 32. Recommended VSSOP PC Board Layout: Component Side Layout**

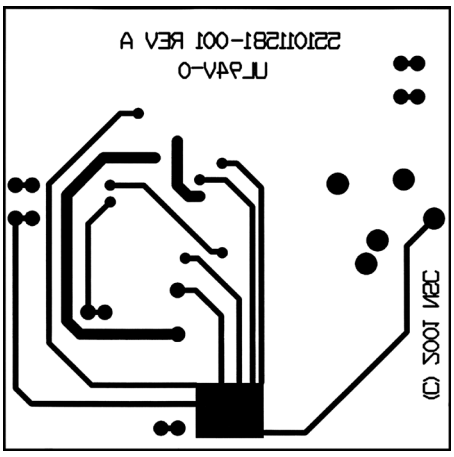

**Figure 33. Recommended VSSOP PC Board Layout: Bottom Side Layout**


Copyright © 2002–2013, Texas Instruments Incorporated

## REVISION HISTORY

| Changes from Revision B (May 2013) to Revision C | Page |
|---|---|
| • Changed layout of National Data Sheet to TI format | 14 |

Copyright © 2002–2013, Texas Instruments Incorporated

## PACKAGING INFORMATION

| Orderable Device | Status (1) | Package Type | Package Drawing | Pins | Package Qty | Eco Plan (2) | Lead finish/ Ball material (6) | MSL Peak Temp (3) | Op Temp (°C) | Device Marking (4/5) | Samples |
|---|---|---|---|---|---|---|---|---|---|---|---|
| LM4875M/NOPB | ACTIVE | SOIC | D | 8 | 95 | RoHS & Green | SN | Level-1-260C-UNLIM | -40 to 85 | LM48 75M | Samples |
| LM4875MM/NOPB | ACTIVE | VSSOP | DGK | 8 | 1000 | RoHS & Green | SN | Level-1-260C-UNLIM | -40 to 85 | G75 | Samples |
| LM4875MX/NOPB | ACTIVE | SOIC | D | 8 | 2500 | RoHS & Green | SN | Level-1-260C-UNLIM | -40 to 85 | LM48 75M | Samples |

(1) The marketing status values are defined as follows:
**ACTIVE:** Product device recommended for new designs.
**LIFEBUY:** TI has announced that the device will be discontinued, and a lifetime-buy period is in effect.
**NRND:** Not recommended for new designs. Device is in production to support existing customers, but TI does not recommend using this part in a new design.
**PREVIEW:** Device has been announced but is not in production. Samples may or may not be available.
**OBSOLETE:** TI has discontinued the production of the device.

(2) **RoHS:** TI defines "RoHS" to mean semiconductor products that are compliant with the current EU RoHS requirements for all 10 RoHS substances, including the requirement that RoHS substance do not exceed 0.1% by weight in homogeneous materials. Where designed to be soldered at high temperatures, "RoHS" products are suitable for use in specified lead-free processes. TI may reference these types of products as "Pb-Free".
**RoHS Exempt:** TI defines "RoHS Exempt" to mean products that contain lead but are compliant with EU RoHS pursuant to a specific EU RoHS exemption.
**Green:** TI defines "Green" to mean the content of Chlorine (Cl) and Bromine (Br) based flame retardants meet JS709B low halogen requirements of <=1000ppm threshold. Antimony trioxide based flame retardants must also meet the <=1000ppm threshold requirement.

(3) MSL, Peak Temp. - The Moisture Sensitivity Level rating according to the JEDEC industry standard classifications, and peak solder temperature.

(4) There may be additional marking, which relates to the logo, the lot trace code information, or the environmental category on the device.

(5) Multiple Device Markings will be inside parentheses. Only one Device Marking contained in parentheses and separated by a "~" will appear on a device. If a line is indented then it is a continuation of the previous line and the two combined represent the entire Device Marking for that device.

(6) Lead finish/Ball material - Orderable Devices may have multiple material finish options. Finish options are separated by a vertical ruled line. Lead finish/Ball material values may wrap to two lines if the finish value exceeds the maximum column width.

**Important Information and Disclaimer:**The information provided on this page represents TI's knowledge and belief as of the date that it is provided. TI bases its knowledge and belief on information provided by third parties, and makes no representation or warranty as to the accuracy of such information. Efforts are underway to better integrate information from third parties. TI has taken and continues to take reasonable steps to provide representative and accurate information but may not have conducted destructive testing or chemical analysis on incoming materials and chemicals. TI and TI suppliers consider certain information to be proprietary, and thus CAS numbers and other limited information may not be available for release.

In no event shall TI's liability arising out of such information exceed the total purchase price of the TI part(s) at issue in this document sold by TI to Customer on an annual basis.

## TAPE AND REEL INFORMATION

**REEL DIMENSIONS**

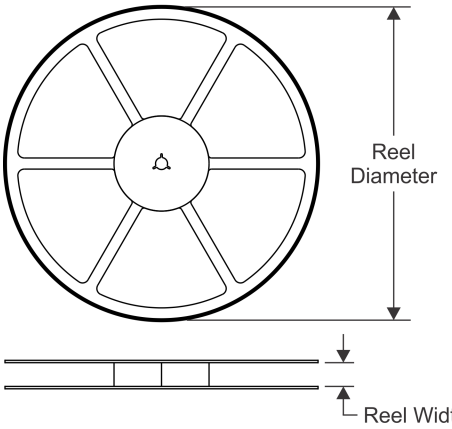


**TAPE DIMENSIONS**

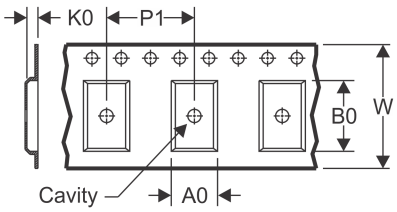


| | |
|---|---|
| A0 | Dimension designed to accommodate the component width |
| B0 | Dimension designed to accommodate the component length |
| K0 | Dimension designed to accommodate the component thickness |
| W | Overall width of the carrier tape |
| P1 | Pitch between successive cavity centers |

**QUADRANT ASSIGNMENTS FOR PIN 1 ORIENTATION IN TAPE**

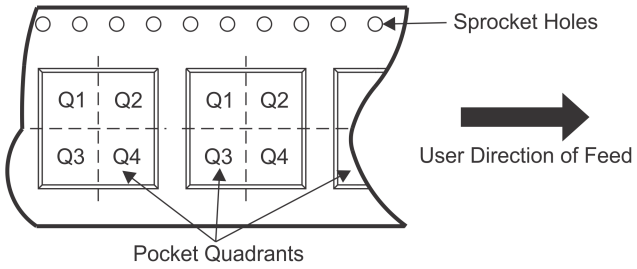


*All dimensions are nominal

| Device | Package Type | Package Drawing | Pins | SPQ | Reel Diameter (mm) | Reel Width W1 (mm) | A0 (mm) | B0 (mm) | K0 (mm) | P1 (mm) | W (mm) | Pin1 Quadrant |
|---|---|---|---|---|---|---|---|---|---|---|---|---|
| LM4875MM/NOPB | VSSOP | DGK | 8 | 1000 | 178.0 | 12.4 | 5.3 | 3.4 | 1.4 | 8.0 | 12.0 | Q1 |
| LM4875MX/NOPB | SOIC | D | 8 | 2500 | 330.0 | 12.4 | 6.5 | 5.4 | 2.0 | 8.0 | 12.0 | Q1 |

TAPE AND REEL BOX DIMENSIONS

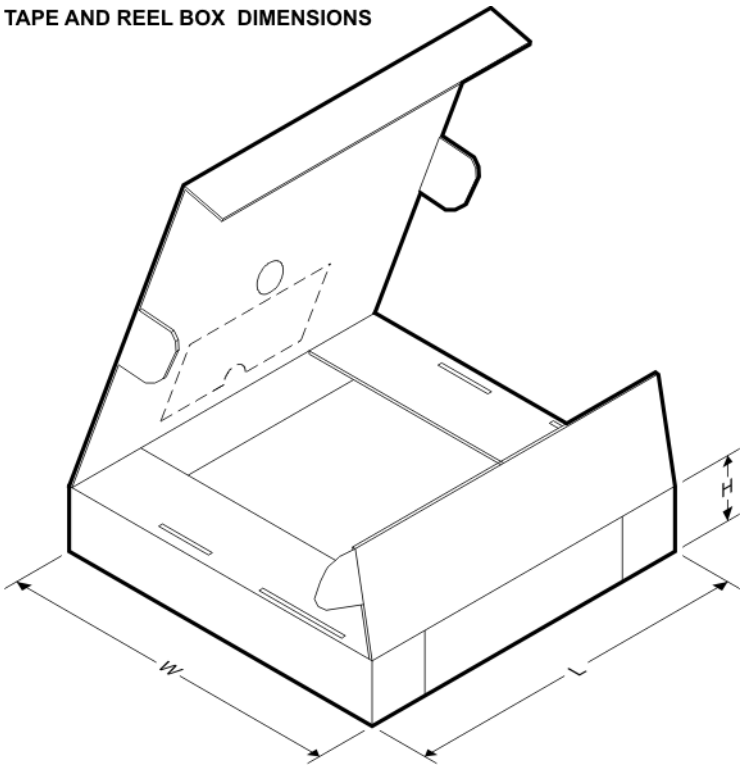


*All dimensions are nominal

| Device | Package Type | Package Drawing | Pins | SPQ | Length (mm) | Width (mm) | Height (mm) |
|---|---|---|---|---|---|---|---|
| LM4875MM/NOPB | VSSOP | DGK | 8 | 1000 | 208.0 | 191.0 | 35.0 |
| LM4875MX/NOPB | SOIC | D | 8 | 2500 | 367.0 | 367.0 | 35.0 |

## TUBE

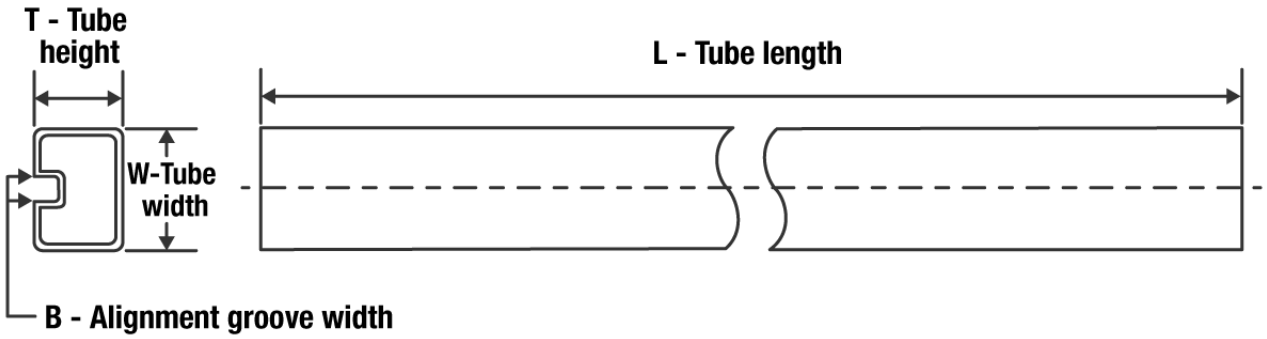


*All dimensions are nominal

| Device | Package Name | Package Type | Pins | SPQ | L (mm) | W (mm) | T (µm) | B (mm) |
|---|---|---|---|---|---|---|---|---|
| LM4875M/NOPB | D | SOIC | 8 | 95 | 495 | 8 | 4064 | 3.05 |

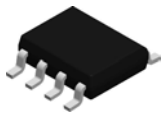

# PACKAGE OUTLINE

## D0008A

## SOIC - 1.75 mm max height

SMALL OUTLINE INTEGRATED CIRCUIT

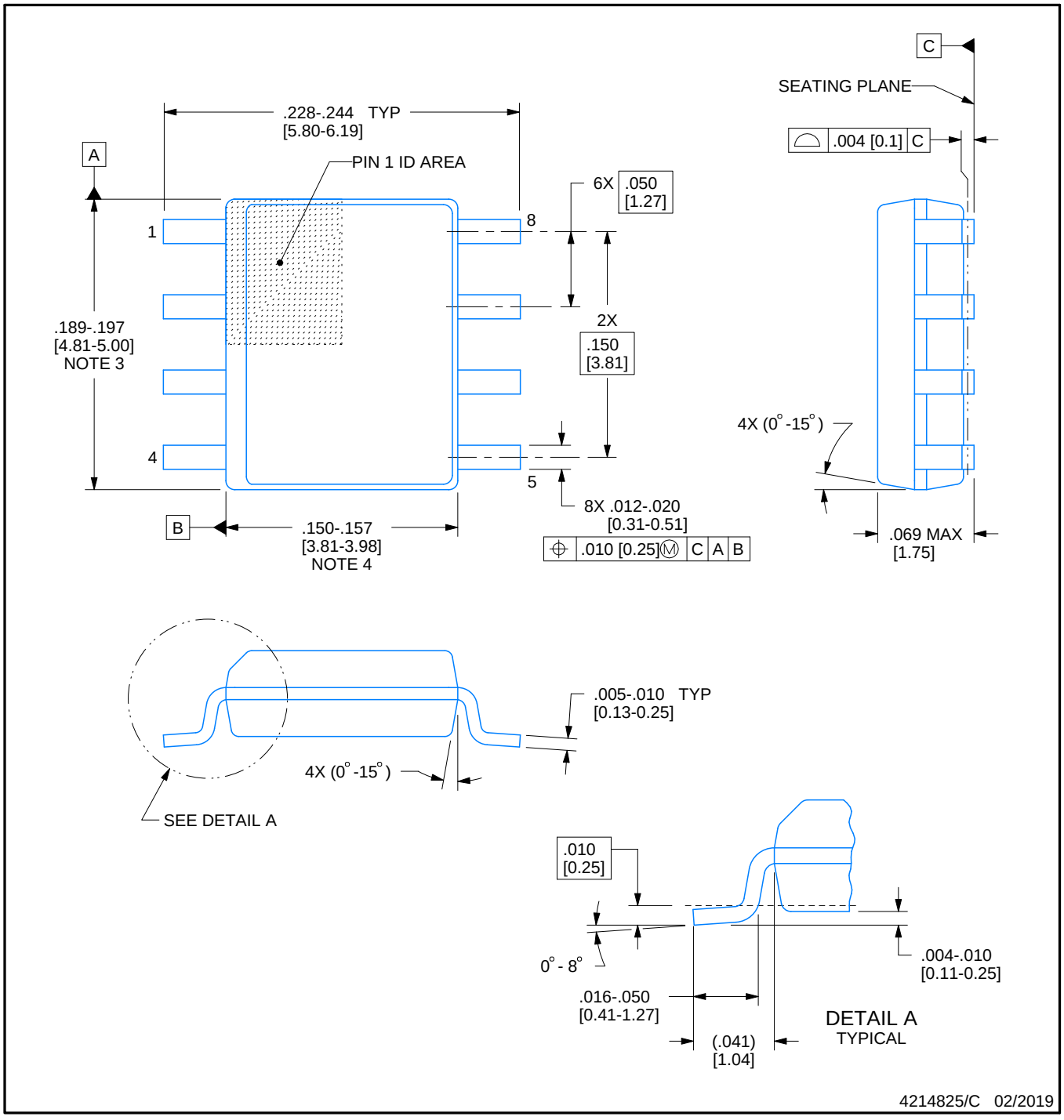


NOTES:

1. Linear dimensions are in inches [millimeters]. Dimensions in parenthesis are for reference only. Controlling dimensions are in inches. Dimensioning and tolerancing per ASME Y14.5M.
2. This drawing is subject to change without notice.
3. This dimension does not include mold flash, protrusions, or gate burrs. Mold flash, protrusions, or gate burrs shall not exceed .006 [0.15] per side.
4. This dimension does not include interlead flash.
5. Reference JEDEC registration MS-012, variation AA.

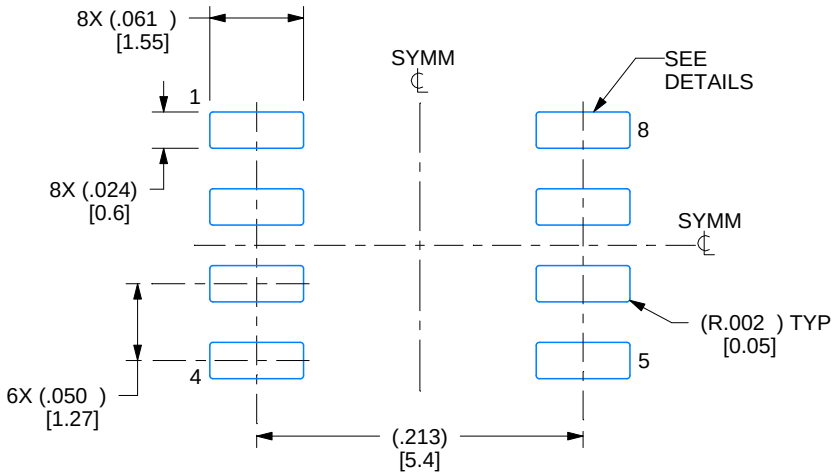


LAND PATTERN EXAMPLE
EXPOSED METAL SHOWN
SCALE:8X

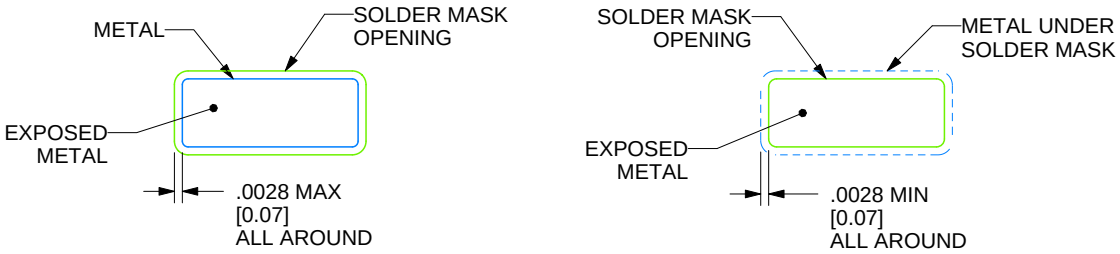


SOLDER MASK DETAILS

4214825/C 02/2019

NOTES: (continued)

6. Publication IPC-7351 may have alternate designs.
7. Solder mask tolerances between and around signal pads can vary based on board fabrication site.

# EXAMPLE STENCIL DESIGN

## D0008A

## SOIC - 1.75 mm max height

SMALL OUTLINE INTEGRATED CIRCUIT

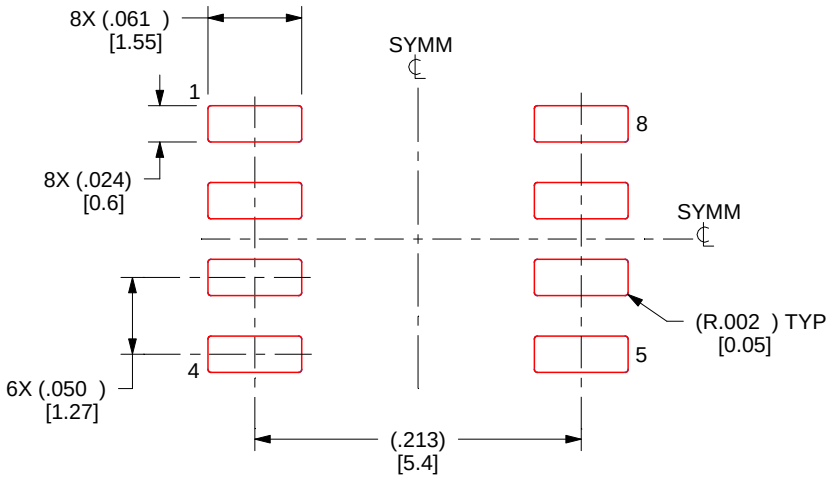


SOLDER PASTE EXAMPLE
BASED ON .005 INCH [0.125 MM] THICK STENCIL
SCALE:8X

4214825/C 02/2019

NOTES: (continued)

8. Laser cutting apertures with trapezoidal walls and rounded corners may offer better paste release. IPC-7525 may have alternate design recommendations.
9. Board assembly site may have different recommendations for stencil design.

# PACKAGE OUTLINE

## DGK0008A

## VSSOP - 1.1 mm max height

SMALL OUTLINE PACKAGE

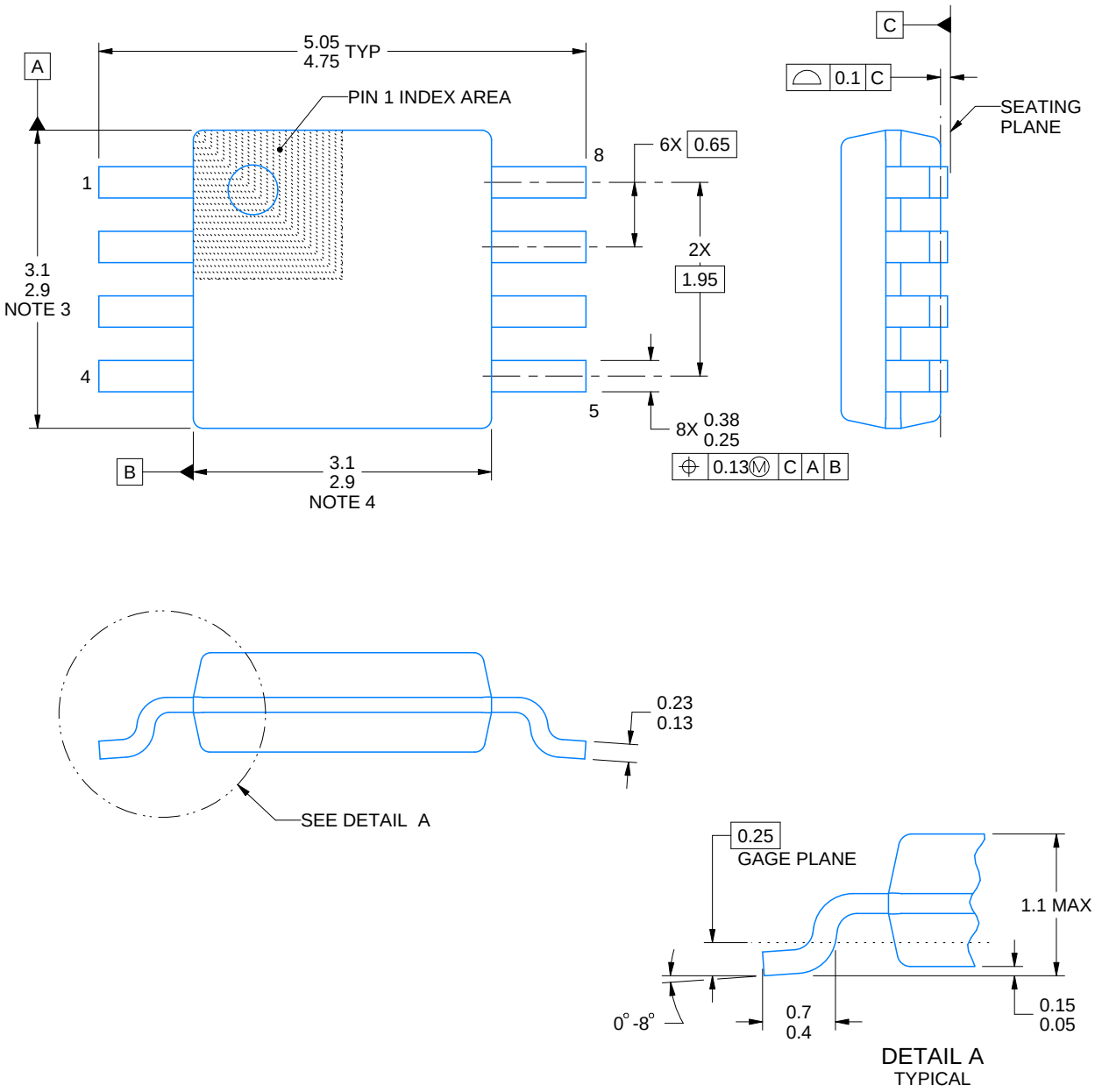


PowerPAD is a trademark of Texas Instruments.

NOTES:

1. All linear dimensions are in millimeters. Any dimensions in parenthesis are for reference only. Dimensioning and tolerancing per ASME Y14.5M.
2. This drawing is subject to change without notice.
3. This dimension does not include mold flash, protrusions, or gate burrs. Mold flash, protrusions, or gate burrs shall not exceed 0.15 mm per side.
4. This dimension does not include interlead flash. Interlead flash shall not exceed 0.25 mm per side.
5. Reference JEDEC registration MO-187.

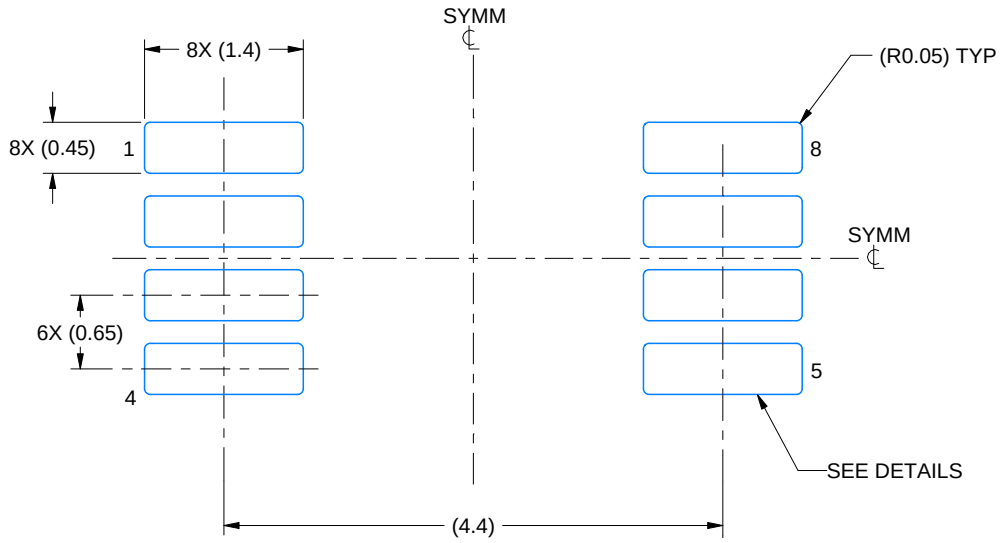


LAND PATTERN EXAMPLE
EXPOSED METAL SHOWN
SCALE: 15X

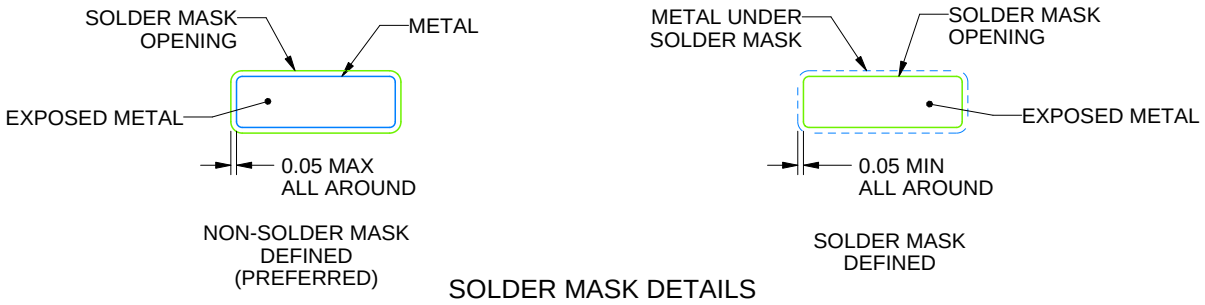


SOLDER MASK DETAILS

4214862/A 04/2023

NOTES: (continued)

6. Publication IPC-7351 may have alternate designs.
7. Solder mask tolerances between and around signal pads can vary based on board fabrication site.
8. Vias are optional depending on application, refer to device data sheet. If any vias are implemented, refer to their locations shown on this view. It is recommended that vias under paste be filled, plugged or tented.
9. Size of metal pad may vary due to creepage requirement.

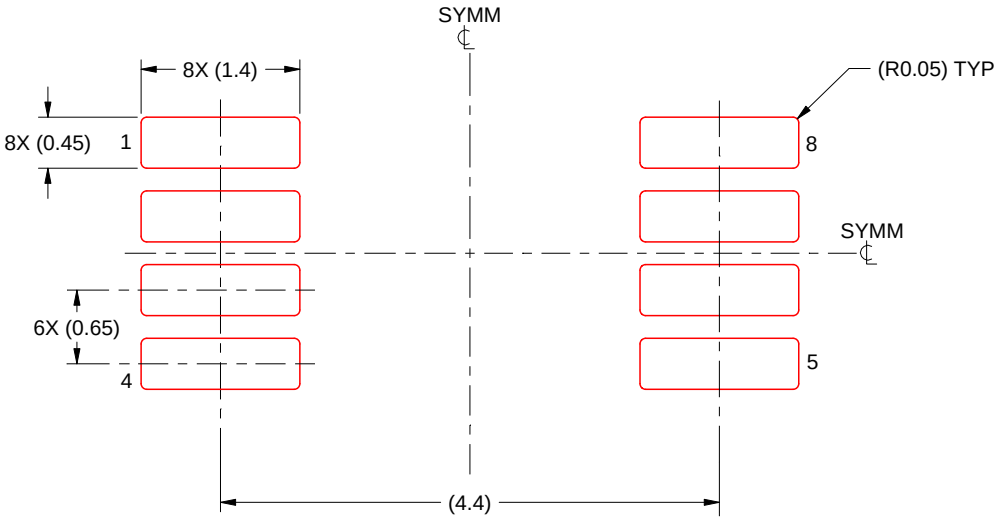


SOLDER PASTE EXAMPLE
SCALE: 15X

4214862/A 04/2023

NOTES: (continued)

11. Laser cutting apertures with trapezoidal walls and rounded corners may offer better paste release. IPC-7525 may have alternate design recommendations.
12. Board assembly site may have different recommendations for stencil design.

# IMPORTANT NOTICE AND DISCLAIMER

TI PROVIDES TECHNICAL AND RELIABILITY DATA (INCLUDING DATA SHEETS), DESIGN RESOURCES (INCLUDING REFERENCE DESIGNS), APPLICATION OR OTHER DESIGN ADVICE, WEB TOOLS, SAFETY INFORMATION, AND OTHER RESOURCES “AS IS” AND WITH ALL FAULTS, AND DISCLAIMS ALL WARRANTIES, EXPRESS AND IMPLIED, INCLUDING WITHOUT LIMITATION ANY IMPLIED WARRANTIES OF MERCHANTABILITY, FITNESS FOR A PARTICULAR PURPOSE OR NON-INFRINGEMENT OF THIRD PARTY INTELLECTUAL PROPERTY RIGHTS.

These resources are intended for skilled developers designing with TI products. You are solely responsible for (1) selecting the appropriate TI products for your application, (2) designing, validating and testing your application, and (3) ensuring your application meets applicable standards, and any other safety, security, regulatory or other requirements.

These resources are subject to change without notice. TI grants you permission to use these resources only for development of an application that uses the TI products described in the resource. Other reproduction and display of these resources is prohibited. No license is granted to any other TI intellectual property right or to any third party intellectual property right. TI disclaims responsibility for, and you will fully indemnify TI and its representatives against, any claims, damages, costs, losses, and liabilities arising out of your use of these resources.

TI’s products are provided subject to TI’s Terms of Sale or other applicable terms available either on ti.com or provided in conjunction with such TI products. TI’s provision of these resources does not expand or otherwise alter TI’s applicable warranties or warranty disclaimers for TI products.

TI objects to and rejects any additional or different terms you may have proposed.

Mailing Address: Texas Instruments, Post Office Box 655303, Dallas, Texas 75265
Copyright © 2024, Texas Instruments Incorporated