User's Guide
SNVU422–June 2014

LM46001EVM User Guide

1 Introduction

The Texas Instruments LM46001EVM evaluation module (EVM) helps designers evaluate the operation and performance of the LM46001 wide-input voltage Simple Switcher® buck regulator. The device offers configurability in a 1 V to 28 V output voltage, synchronous rectification and a 200 kHz to 2.2 MHz adjustable frequency range. It also offers external frequency synchronization, power good (PG) flag, and a precision enable to program undervoltage lockout (UVLO) and internal compensation. The LM46001EVM is configured for an output voltage of 3.3 V and a switching frequency of 500 kHz. Refer to the LM46001 datasheet for additional features, detailed description and available options.

The EVM contains one DC-DC converter (See Table 1).

Table 1. Device and Package Configurations

CONVERTER	IC	PACKAGE
U1	LM46001	(PWP) HTSSOP-16

2 Setup

This section describes the test points and connectors on the EVM and how to properly connect, set up and use the LM46001EVM. Please refer to Figure 1 for a top view of the EVM and relative placement of the different test points and edge connector.

Copyright © 2014, Texas Instruments Incorporated

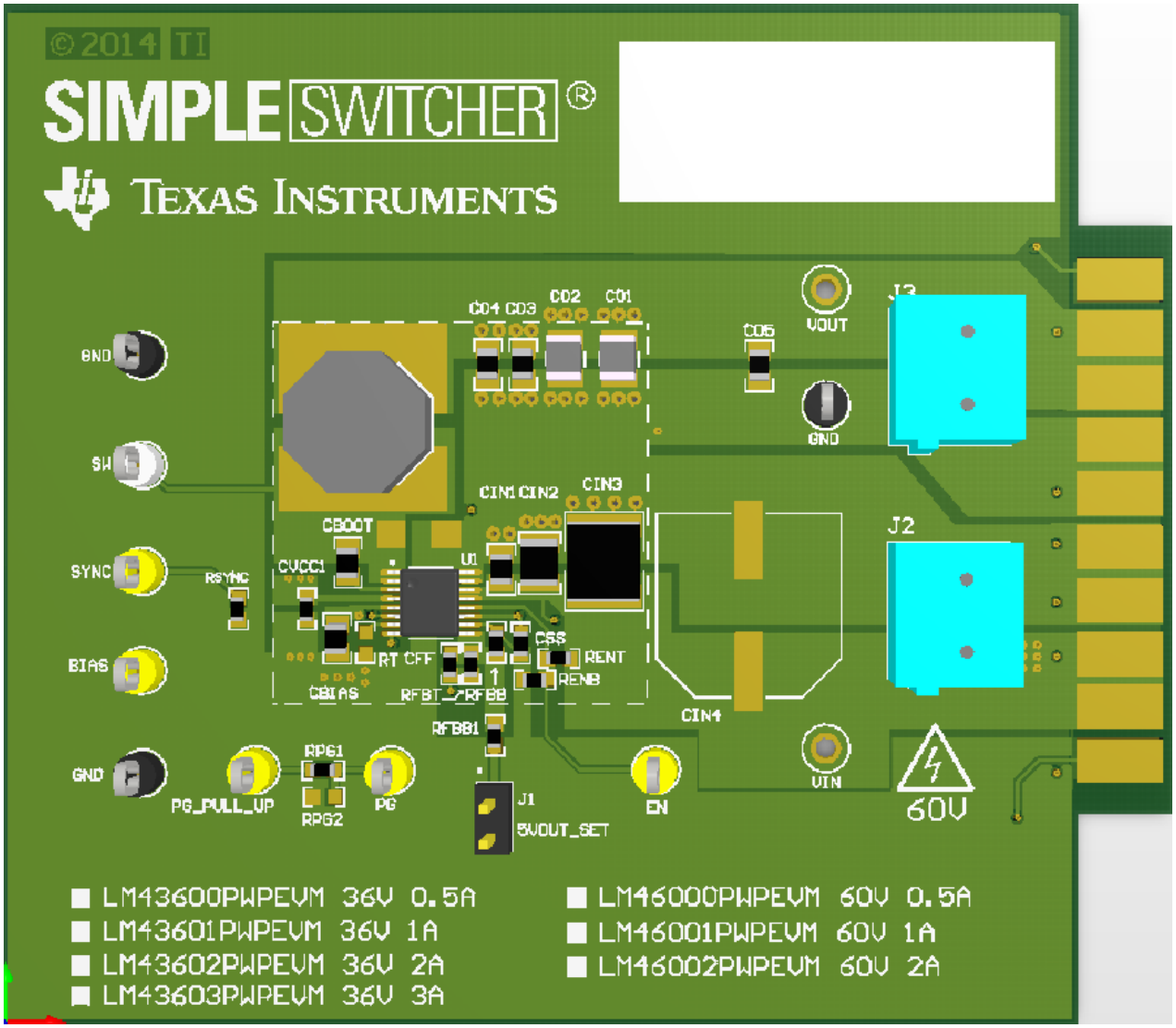

Figure 1. Top View of LM46001EVM

3 Input/Output (I/O) Connector Description

VIN – Terminal on J2—is the power input terminal for the converter. The terminal edge connector also provides a power (VIN) and ground (GND) connection to allow the user to attach the EVM to a cable harness.

VOUT – Terminal on J3—is the regulated output voltage for the converter. The terminal edge connector also provides a power (VOUT) and ground (GND) connection to allow the user to attach the EVM to a cable harness.

GND – Terminal on J2 and J3—are the ground reference for the converter. The terminal edge connector also provides a GND connection for attaching the EVM to a cable harness.

EN – Testpoint—is used to enable the converter by supplying a voltage greater than 2.2 V (typ) or just to monitor the voltage on this terminal whenever a resistor divider is in place (for precision enable applications). The LM46001EVM is built for a precision enable application with resistors RENT and RENB pre-assembled. The regulator will be enabled when VIN > 3.5 V. This threshold can be calculated by:

Copyright © 2014, Texas Instruments Incorporated

$$Enable_Voltage = VIH_EN \cdot \left(1 + \frac{RENT}{RENB}\right) \quad (1)$$

where

- VIH_EN is 2.2 V (typ)

PG – Testpoint—is used to monitor the power good flag. This flag indicates whether the output voltage has reached its regulation point. This terminal is an open-drain output that requires a pullup resistor to the appropriate logic voltage (any voltage less than 14 V). A pre-installed resistor RPG1 of 100 kΩ is tied to the PG terminal and brought out to the PG_PULL UP test point.

PG_PULL UP – Testpoint—is the top connection of the pre-assembled 100-kΩ RPG1 pullup resistor that ties directly to the open-drain PG terminal. Supply an appropriate voltage to this test point, or tie it directly to the VOUT test point to observe the PG flag operation.

BIAS – Testpoint—is used to monitor the BIAS voltage. A pre-installed capacitor of 4.7 µF is connected from the BIAS terminal to ground (GND). This node is connected to VOUT through a zero Ohm resistor pre-installed on the bottom layer, labeled (RBIAS).

SYNC – Testpoint —is the input terminal for an optional external input clock to the converter. The external clock frequency must be between 200 kHz and 2.2 MHz, if used. A pulldown resistor of 100 kΩ (RSYNC) is installed on the EVM.

SW – Testpoint—is used to monitor the voltage on the switch terminal and the switching frequency of the voltage regulator. Remove this test point before making any electromagnetic interference (EMI) measurements.

VSUPPLY – Edge Connector terminal #9—is used to supply the input voltage through an on board LC filter (if one is needed for conducted EMI/EMC measurements). The Lin and Cd component pads are located on the bottom side of the EVM. Please refer to the EVM schematic for initial suggestion of component values.

4 Setup

Set the input voltage (VIN) range for the converter between the operating voltage range of 3.5 V to 60 V. If a load is driven, it should be applied to the VOUT terminal and should not exceed the maximum load current of 1 A.

5 Operation

For proper operation of the LM46001, VIN, GND, and VOUT should be properly configured as stated above. In this configuration, the device will start up when power is applied and the output voltage of the regulator (VOUT) will come up to the proper value. The default setting for output voltage of the LM46001EVM is 3.3 V. Other output voltages can be set by replacing the feedback terminal resistor dividers RFBT and RFBB; please consult the datasheet for proper selection of these resistor values.

The default frequency for the LM46001EVM is 500 kHz. If other frequencies are desired, within the frequency range of 200 kHz and 2.2 MHz, the RT resistor value can be changed. Please consult the datasheet for proper selection of the RT resistor. You must change inductor (L_60V_LC) and total output capacitance for proper control loop operation.

Copyright © 2014, Texas Instruments Incorporated

6 Schematic

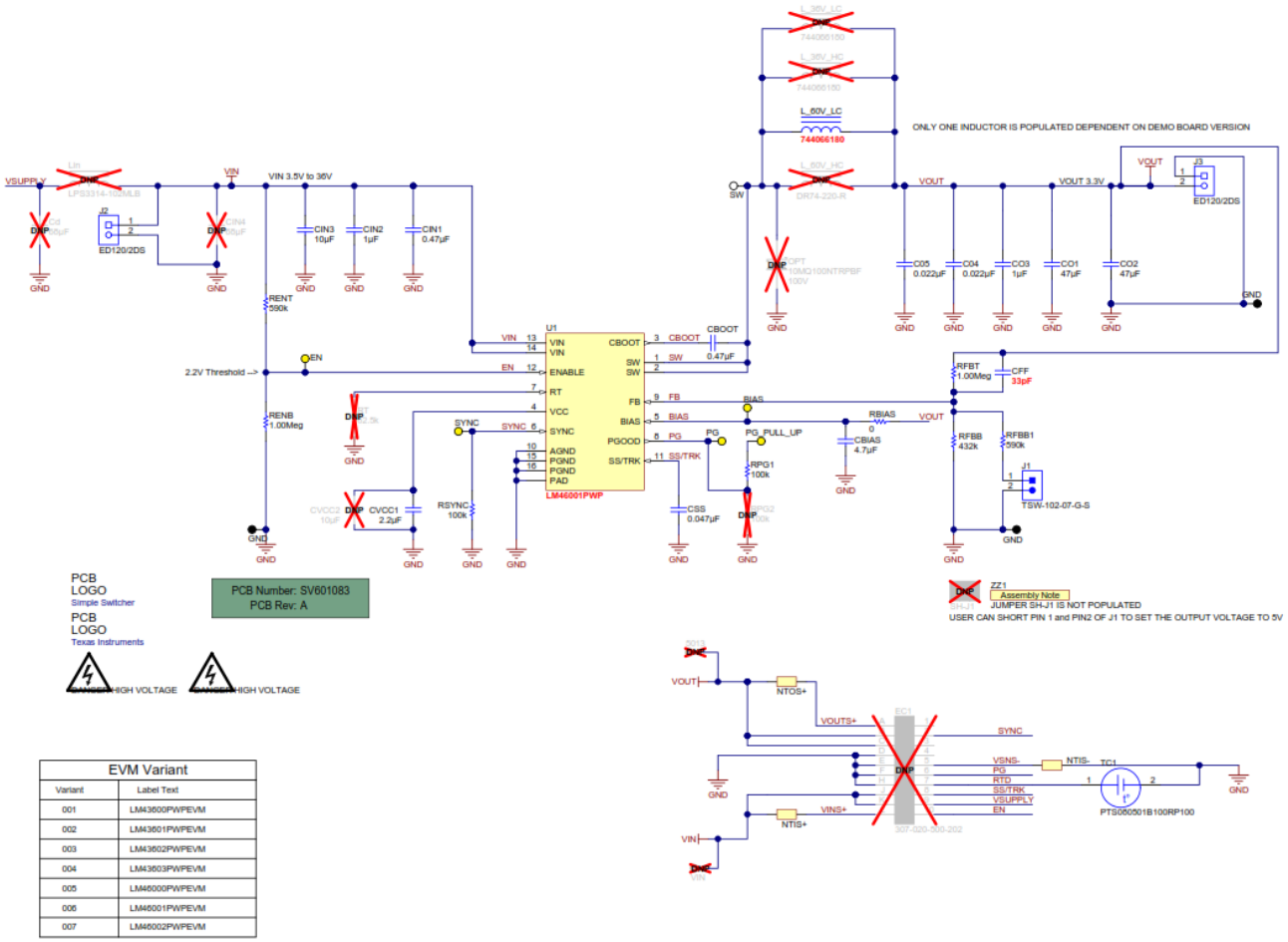

EVM Variant	
Variant	Label Text
001	LM43600PWPEVM
002	LM43601PWPEVM
003	LM43602PWPEVM
004	LM43603PWPEVM
005	LM46000PWPEVM
006	LM46001PWPEVM
007	LM46002PWPEVM

Figure 2. LM46001EVM Schematic

7 Board Layout

Figure 3 through Figure 7 show the board layout for the LM46001EVM. The EVM offers resistors, capacitors and test points to configure the output voltage, precision enable terminal, set frequency and external clock synchronization.

The PWP HTSSOP-16 package offers an exposed thermal pad which must be soldered to the copper landing on the PCB for optimal thermal performance. The PCB consists of a 4-layer design. There are 2-oz copper planes on the top and bottom and 1-oz copper mid-layer planes to dissipate heat with an array of thermal vias under the thermal pad to connect to all four layers.

Test points have been provided for ease of use to connect the power supply, required load and to monitor critical signals. The 12-terminal edge connector can also be used to facilitate the use of a cable harness if one is required (Mating connector part number: 307-020-500-202 by EDAC Inc).

Copyright © 2014, Texas Instruments Incorporated

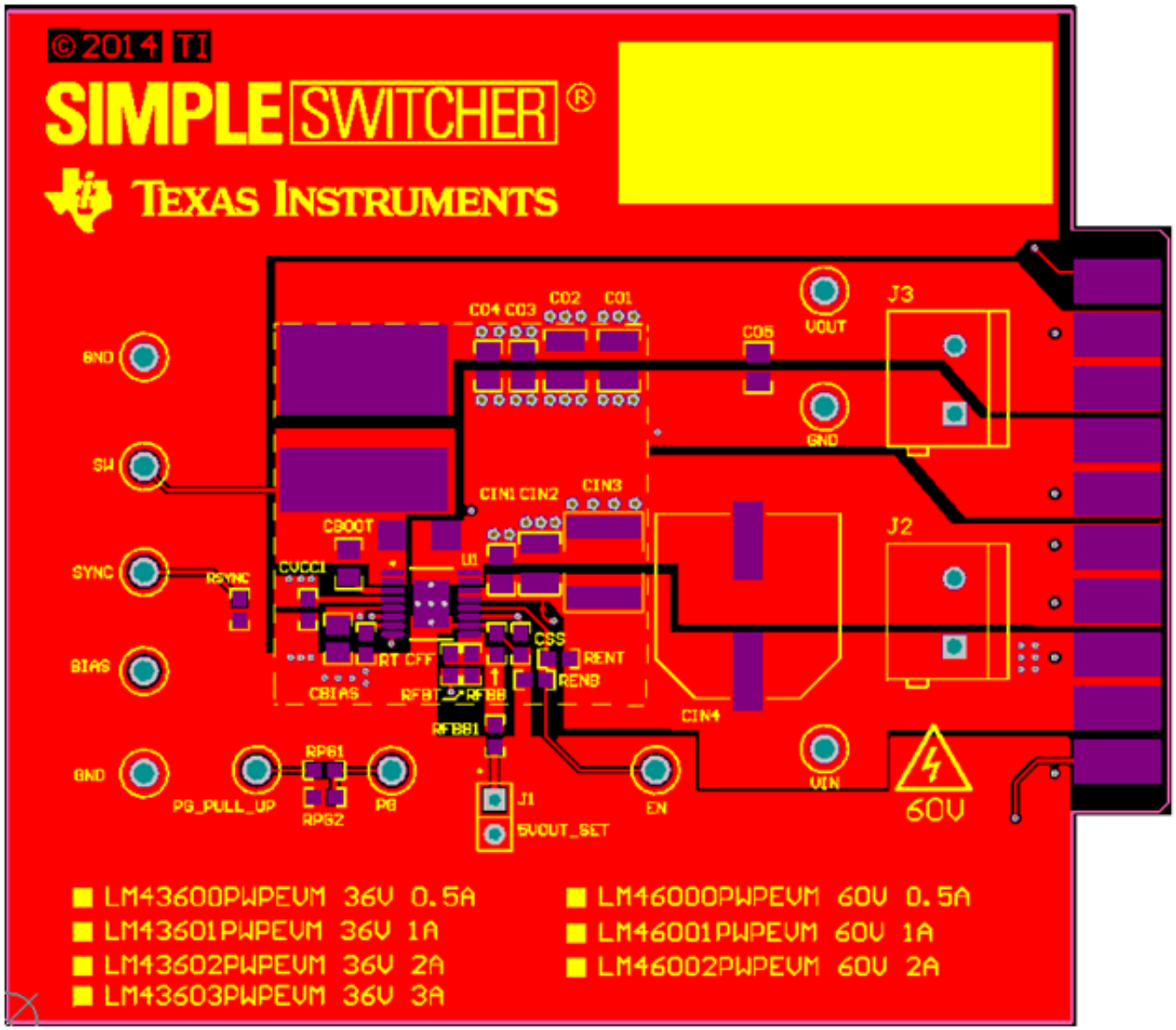

Figure 3. Top Assembly Layer

Copyright © 2014, Texas Instruments Incorporated

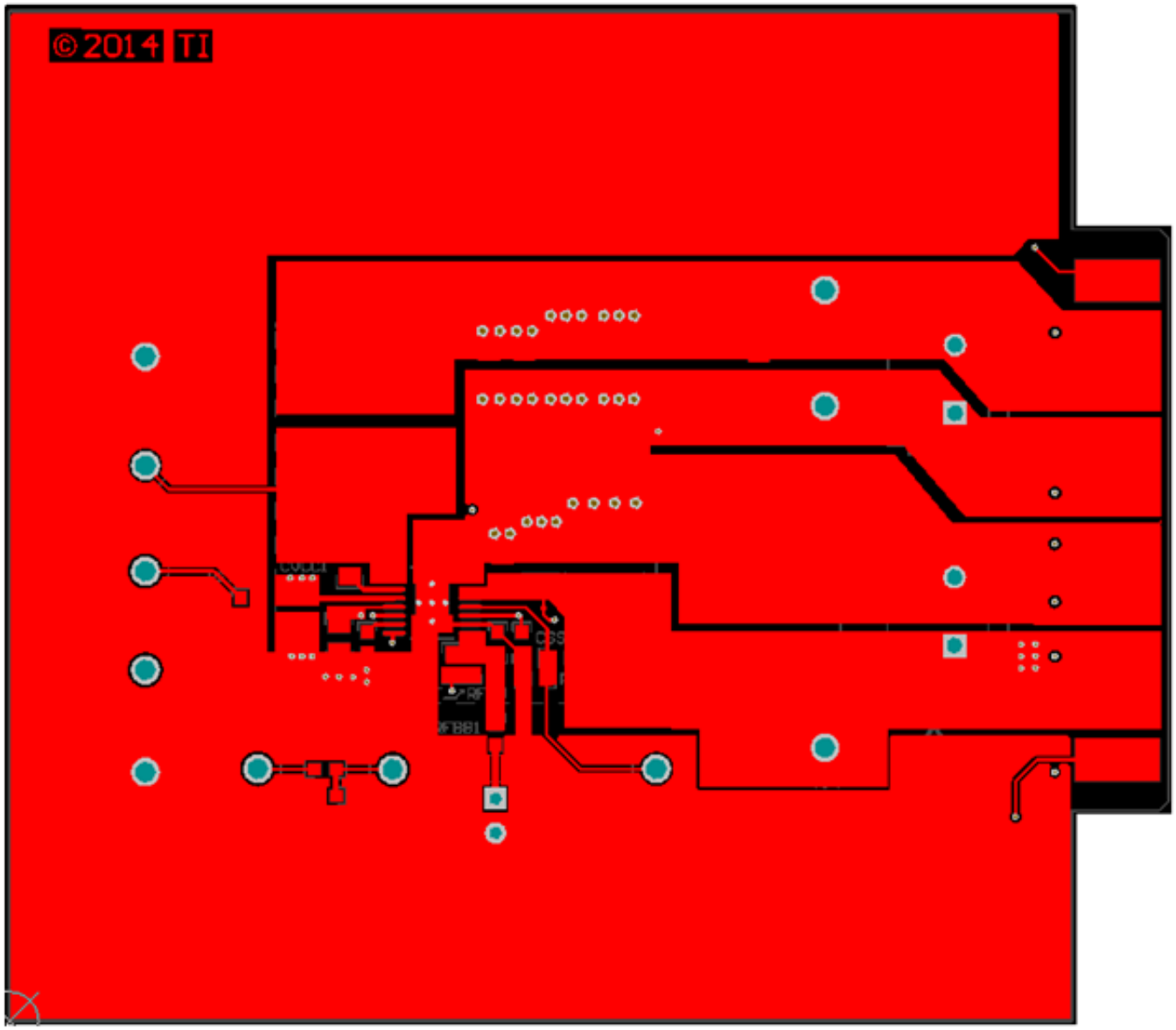

Figure 4. Top Layer Routing

Copyright © 2014, Texas Instruments Incorporated

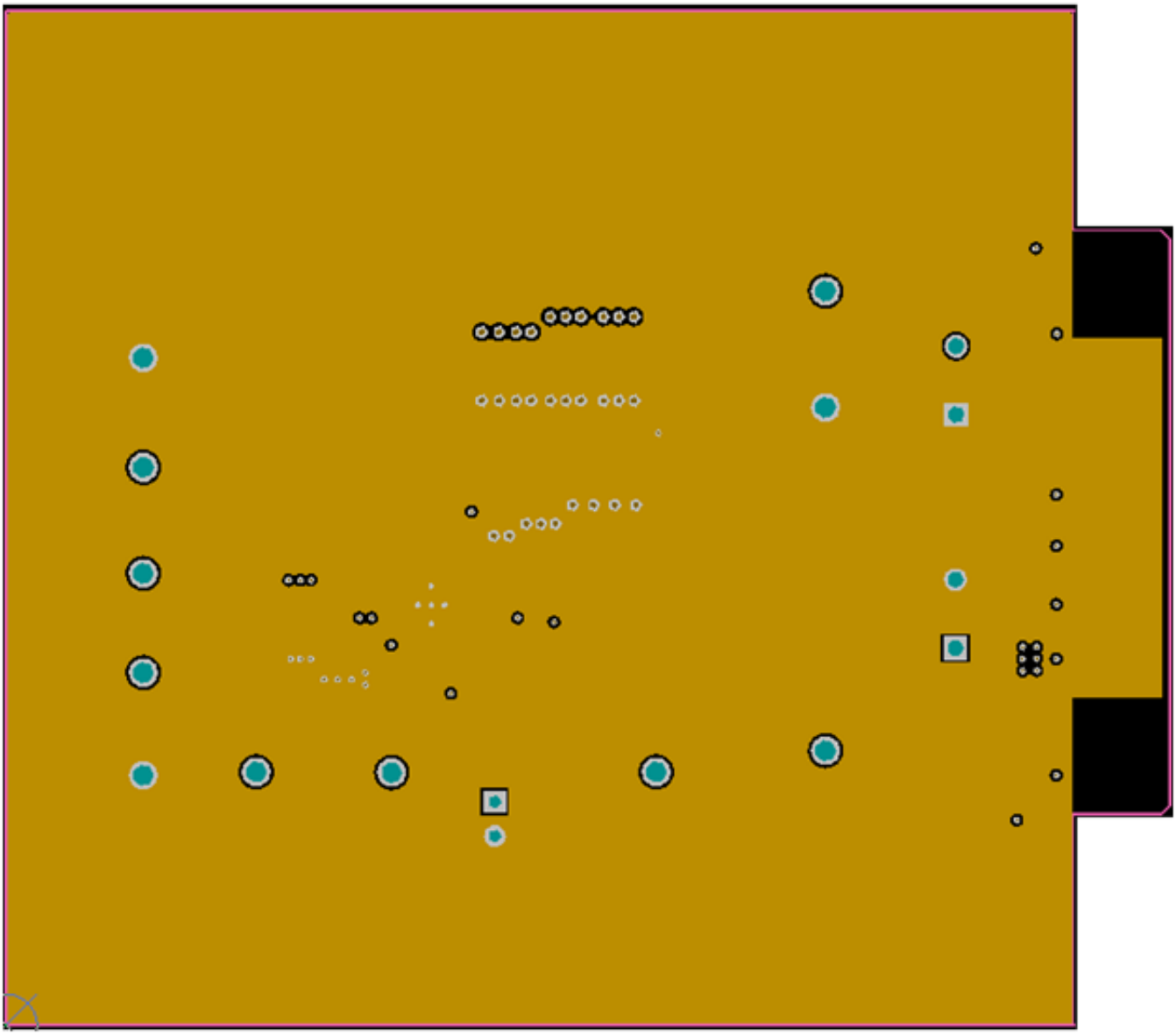

Figure 5. Mid Layer 1 Ground Plane

Copyright © 2014, Texas Instruments Incorporated

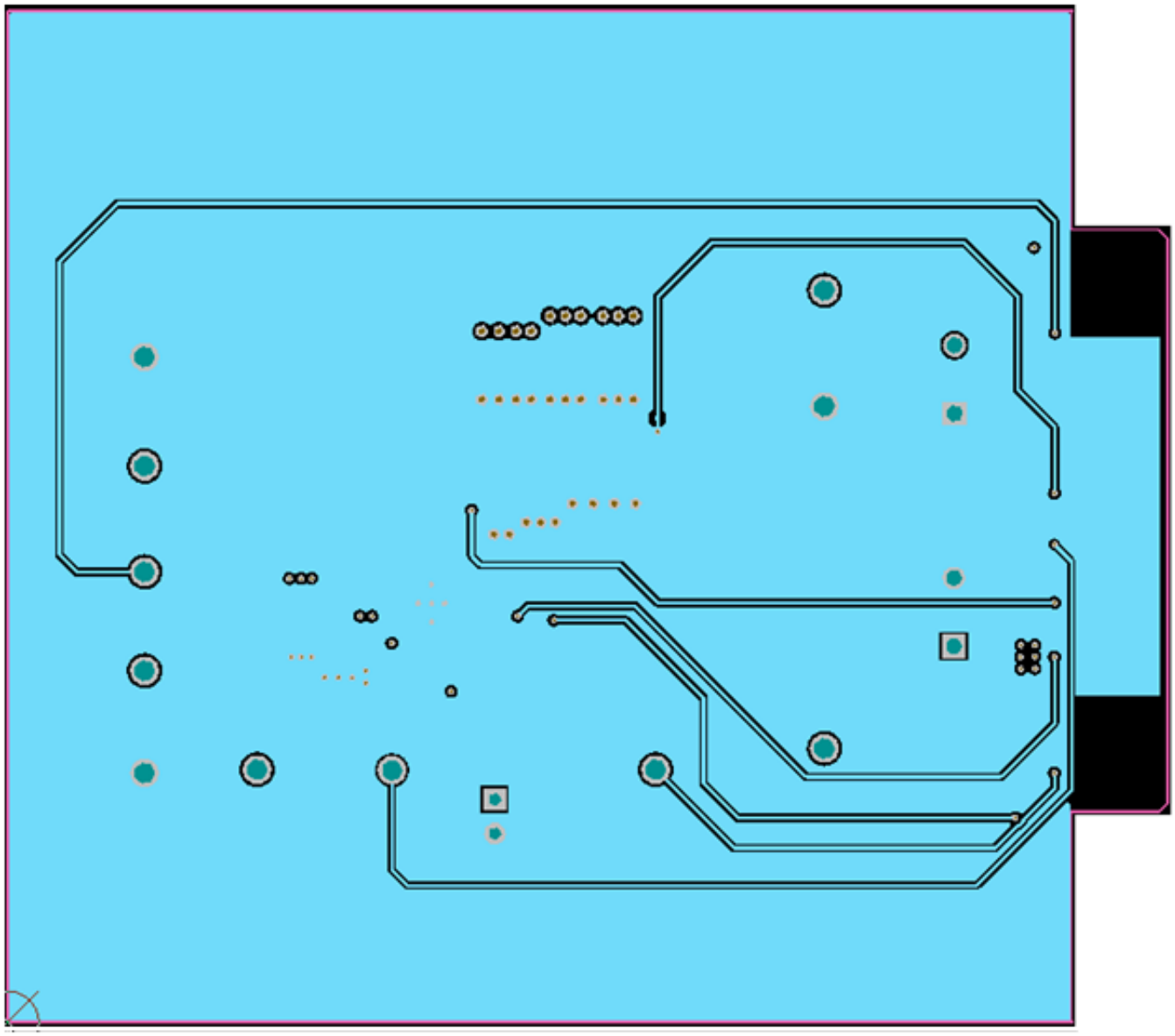

Figure 6. Mid Layer 2 Routing

Copyright © 2014, Texas Instruments Incorporated

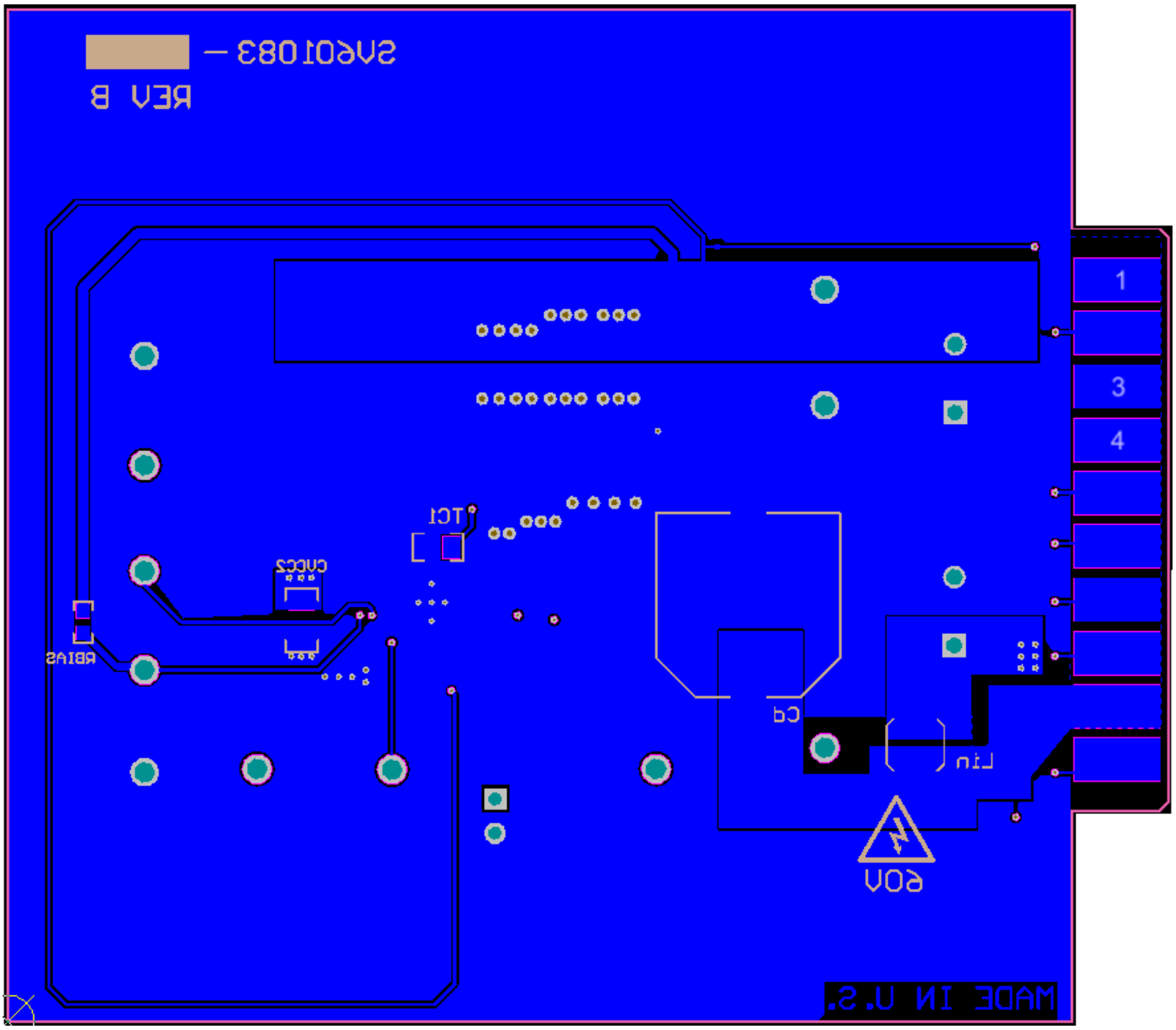

Figure 7. Bottom Layer Routing

Copyright © 2014, Texas Instruments Incorporated

Table 2. LM46001EVM Bill of Materials (BOM) for 500 kHz Configuration

Designator	Description	Manufacturer	PartNumber	Quantity
!PCB	Printed Circuit Board	Any	SV601083	1
C04, C05	CAP, CERM, 0.022µF, 100V, +/-5%, X7R, 0805	AVX	08051C223JAT2A	2
CBIAS	CAP, CERM, 4.7µF, 50V, +/-10%, X5R, 0805	TDK	C2012X5R1H475K125AB	1
CBOOT	CAP, CERM, 0.47uF, 16V, +/-10%, X7R, 0805	Kemet	C0805C474K4RACTU	1
CFF	CAP, CERM, 33pF, 50V, +/-5%, C0G/NP0, 0603	Kemet	C0603C330J5GACTU	1
CIN1	CAP, CERM, 0.47µF, 100V, +/-10%, X7R, 0805	MuRata	GRM21BR72A474KA73L	1
CIN2	CAP, CERM, 1uF, 100V, +/-10%, X7R, 1210	TDK	C3225X7R2A105K200AA	1
CIN3	CAP, CERM, 10µF, 100V, +/-20%, X7S, 2220	TDK	C5750X7S2A106M	1
CO1, CO2	CAP, CERM, 47uF, 10V, +/-20%, X7R, 1210	MuRata	GRM32ER71A476ME15L	2
CO3	CAP, CERM, 1µF, 25V, +/-10%, X5R, 0805	AVX	08053D105KAT2A	1
CSS	CAP, CERM, 0.047µF, 50V, +/-10%, X7R, 0603	TDK	C1608X7R1H473K	1
CVCC1	CAP, CERM, 2.2µF, 10V, +/-10%, X7R, 0603	MuRata	GRM188R71A225KE15D	1
J1	Header, TH, 100mil, 2x1, Gold plated, 230 mil above insulator	Samtec	TSW-102-07-G-S	1
J2, J3	TERMINAL BLOCK 5.08MM VERT 2POS, TH	On-Shore Technology	ED120/2DS	2
L_60V_LC	Inductor, Shielded,18uH, 2.8A, 0.054 ohm, SMD	Wurth Elektronik	744066180	1
RBIAS	RES, 0 ohm, 5%, 0.1W, 0603	Vishay-Dale	CRCW06030000Z0EA	1
RENB, RFBT	RES, 1.00Meg ohm, 1%, 0.1W, 0603	Vishay-Dale	CRCW06031M00FKEA	2
RENT, RFBB1	RES, 590k ohm, 1%, 0.1W, 0603	Vishay-Dale	CRCW0603590KFKEA	2
RFBB	RES, 432k ohm, 1%, 0.1W, 0603	Vishay-Dale	CRCW0603432KFKEA	1
RPG1, RSYNC	RES, 100k ohm, 1%, 0.1W, 0603	Vishay-Dale	CRCW0603100KFKEA	2
RTD	TEMP SENSOR RTD 100 OHM 0805	VISHAY	PTS080501B100RP100	1
TP1	Test Point, TH, Multipurpose, Orange	Keystone	5013	0
TP2	Test Point, TH, Multipurpose, Red	Keystone	5010	0
TP3	Test Point, TH, Multipurpose, White	Keystone	5012	1
TP5, TP9, TP10	Test Point, TH, Multipurpose, Black	Keystone	5011	3
TP6, TP7, TP8, TP10, TP11	Test Point, TH Multipurpose, Yellow	Keystone	5014	5
U1	3.5 - 60V 1A Step Down Converter	Texas Instruments	LM46001PWP	1
Cd, CIN4	CAP, AL, 68µF, 100V, +/-20%, 0.32 ohm, SMD	Panasonic	EEV-FK2A680Q	0
CVCC2	CAP, CERM, 10µF, 10V, +/-20%, X7R, 1206	TDK	C3216X7R1A106M	0
Lin	Inductor, Shielded Drum Core, Ferrite, 1µH, 2A, 0.06 ohm, SMD	Coilcraft	LPS3314-102MLB	0
L_36V_LC	Inductor, Shielded, Powdered Iron, 6.8µH, 6.7A, 0.0334ohm, SMD	Vishay-Dale	IHLP3232DZER6R8M11	0
L_60V_HC	Inductor, Shielded Drum Core, Ferrite, 22µH, 1.75A, 0.0925 ohm, SMD	Coiltronics	DR74-220-R	0
OPT	Diode, Schottky, 100V, 1.5A, SMA	International Rectifier	10MQ100NTRPBF	0
RPG2	RES, 100k ohm, 1%, 0.1W, 0603	Vishay-Dale	CRCW0603100KFKEA	0
RT	RES, 82.5k ohm, 1%, 0.1W, 0603	Vishay-Dale	CRCW060382K5FKEA	0
SH-J1	Shunt, 100mil, Gold plated, Black	3M	969102-0000-DA	0

Copyright © 2014, Texas Instruments Incorporated

STANDARD TERMS AND CONDITIONS FOR EVALUATION MODULES

1. *Delivery:* TI delivers TI evaluation boards, kits, or modules, including any accompanying demonstration software, components, or documentation (collectively, an “EVM” or “EVMs”) to the User (“User”) in accordance with the terms and conditions set forth herein. Acceptance of the EVM is expressly subject to the following terms and conditions.

   1.1 EVMs are intended solely for product or software developers for use in a research and development setting to facilitate feasibility evaluation, experimentation, or scientific analysis of TI semiconductors products. EVMs have no direct function and are not finished products. EVMs shall not be directly or indirectly assembled as a part or subassembly in any finished product. For clarification, any software or software tools provided with the EVM (“Software”) shall not be subject to the terms and conditions set forth herein but rather shall be subject to the applicable terms and conditions that accompany such Software

   1.2 EVMs are not intended for consumer or household use. EVMs may not be sold, sublicensed, leased, rented, loaned, assigned, or otherwise distributed for commercial purposes by Users, in whole or in part, or used in any finished product or production system.

2 *Limited Warranty and Related Remedies/Disclaimers*:

   2.1 These terms and conditions do not apply to Software. The warranty, if any, for Software is covered in the applicable Software License Agreement.

   2.2 TI warrants that the TI EVM will conform to TI's published specifications for ninety (90) days after the date TI delivers such EVM to User. Notwithstanding the foregoing, TI shall not be liable for any defects that are caused by neglect, misuse or mistreatment by an entity other than TI, including improper installation or testing, or for any EVMs that have been altered or modified in any way by an entity other than TI. Moreover, TI shall not be liable for any defects that result from User's design, specifications or instructions for such EVMs. Testing and other quality control techniques are used to the extent TI deems necessary or as mandated by government requirements. TI does not test all parameters of each EVM.

   2.3 If any EVM fails to conform to the warranty set forth above, TI's sole liability shall be at its option to repair or replace such EVM, or credit User's account for such EVM. TI's liability under this warranty shall be limited to EVMs that are returned during the warranty period to the address designated by TI and that are determined by TI not to conform to such warranty. If TI elects to repair or replace such EVM, TI shall have a reasonable time to repair such EVM or provide replacements. Repaired EVMs shall be warranted for the remainder of the original warranty period. Replaced EVMs shall be warranted for a new full ninety (90) day warranty period.

3 *Regulatory Notices:*

   3.1 *United States*

      3.1.1 *Notice applicable to EVMs not FCC-Approved:*

      This kit is designed to allow product developers to evaluate electronic components, circuitry, or software associated with the kit to determine whether to incorporate such items in a finished product and software developers to write software applications for use with the end product. This kit is not a finished product and when assembled may not be resold or otherwise marketed unless all required FCC equipment authorizations are first obtained. Operation is subject to the condition that this product not cause harmful interference to licensed radio stations and that this product accept harmful interference. Unless the assembled kit is designed to operate under part 15, part 18 or part 95 of this chapter, the operator of the kit must operate under the authority of an FCC license holder or must secure an experimental authorization under part 5 of this chapter.

      3.1.2 *For EVMs annotated as FCC – FEDERAL COMMUNICATIONS COMMISSION Part 15 Compliant:*

      CAUTION

      This device complies with part 15 of the FCC Rules. Operation is subject to the following two conditions: (1) This device may not cause harmful interference, and (2) this device must accept any interference received, including interference that may cause undesired operation.

      Changes or modifications not expressly approved by the party responsible for compliance could void the user's authority to operate the equipment.

      FCC Interference Statement for Class A EVM devices

      NOTE: This equipment has been tested and found to comply with the limits for a Class A digital device, pursuant to part 15 of the FCC Rules. These limits are designed to provide reasonable protection against harmful interference when the equipment is operated in a commercial environment. This equipment generates, uses, and can radiate radio frequency energy and, if not installed and used in accordance with the instruction manual, may cause harmful interference to radio communications. Operation of this equipment in a residential area is likely to cause harmful interference in which case the user will be required to correct the interference at his own expense.

FCC Interference Statement for Class B EVM devices

NOTE: This equipment has been tested and found to comply with the limits for a Class B digital device, pursuant to part 15 of the FCC Rules. These limits are designed to provide reasonable protection against harmful interference in a residential installation. This equipment generates, uses and can radiate radio frequency energy and, if not installed and used in accordance with the instructions, may cause harmful interference to radio communications. However, there is no guarantee that interference will not occur in a particular installation. If this equipment does cause harmful interference to radio or television reception, which can be determined by turning the equipment off and on, the user is encouraged to try to correct the interference by one or more of the following measures:

- *Reorient or relocate the receiving antenna.*
- *Increase the separation between the equipment and receiver.*
- *Connect the equipment into an outlet on a circuit different from that to which the receiver is connected.*
- *Consult the dealer or an experienced radio/TV technician for help.*

3.2 *Canada*

3.2.1 *For EVMs issued with an Industry Canada Certificate of Conformance to RSS-210*

Concerning EVMs Including Radio Transmitters:

This device complies with Industry Canada license-exempt RSS standard(s). Operation is subject to the following two conditions: (1) this device may not cause interference, and (2) this device must accept any interference, including interference that may cause undesired operation of the device.

Concernant les EVMs avec appareils radio:

Le présent appareil est conforme aux CNR d'Industrie Canada applicables aux appareils radio exempts de licence. L'exploitation est autorisée aux deux conditions suivantes: (1) l'appareil ne doit pas produire de brouillage, et (2) l'utilisateur de l'appareil doit accepter tout brouillage radioélectrique subi, même si le brouillage est susceptible d'en compromettre le fonctionnement.

Concerning EVMs Including Detachable Antennas:

Under Industry Canada regulations, this radio transmitter may only operate using an antenna of a type and maximum (or lesser) gain approved for the transmitter by Industry Canada. To reduce potential radio interference to other users, the antenna type and its gain should be so chosen that the equivalent isotropically radiated power (e.i.r.p.) is not more than that necessary for successful communication. This radio transmitter has been approved by Industry Canada to operate with the antenna types listed in the user guide with the maximum permissible gain and required antenna impedance for each antenna type indicated. Antenna types not included in this list, having a gain greater than the maximum gain indicated for that type, are strictly prohibited for use with this device.

Concernant les EVMs avec antennes détachables

Conformément à la réglementation d'Industrie Canada, le présent émetteur radio peut fonctionner avec une antenne d'un type et d'un gain maximal (ou inférieur) approuvé pour l'émetteur par Industrie Canada. Dans le but de réduire les risques de brouillage radioélectrique à l'intention des autres utilisateurs, il faut choisir le type d'antenne et son gain de sorte que la puissance isotrope rayonnée équivalente (p.i.r.e.) ne dépasse pas l'intensité nécessaire à l'établissement d'une communication satisfaisante. Le présent émetteur radio a été approuvé par Industrie Canada pour fonctionner avec les types d'antenne énumérés dans le manuel d'usage et ayant un gain admissible maximal et l'impédance requise pour chaque type d'antenne. Les types d'antenne non inclus dans cette liste, ou dont le gain est supérieur au gain maximal indiqué, sont strictement interdits pour l'exploitation de l'émetteur

3.3 *Japan*

3.3.1 *Notice for EVMs delivered in Japan:* Please see http://www.tij.co.jp/lsds/ti_ja/general/eStore/notice_01.page 日本国内に輸入される評価用キット、ボードについては、次のところをご覧ください。
http://www.tij.co.jp/lsds/ti_ja/general/eStore/notice_01.page

3.3.2 *Notice for Users of EVMs Considered "Radio Frequency Products" in Japan:* EVMs entering Japan may not be certified by TI as conforming to Technical Regulations of Radio Law of Japan.

If User uses EVMs in Japan, not certified to Technical Regulations of Radio Law of Japan, User is required by Radio Law of Japan to follow the instructions below with respect to EVMs:

1. Use EVMs in a shielded room or any other test facility as defined in the notification #173 issued by Ministry of Internal Affairs and Communications on March 28, 2006, based on Sub-section 1.1 of Article 6 of the Ministry's Rule for Enforcement of Radio Law of Japan,
2. Use EVMs only after User obtains the license of Test Radio Station as provided in Radio Law of Japan with respect to EVMs, or
3. Use of EVMs only after User obtains the Technical Regulations Conformity Certification as provided in Radio Law of Japan with respect to EVMs. Also, do not transfer EVMs, unless User gives the same notice above to the transferee. Please note that if User does not follow the instructions above, User will be subject to penalties of Radio Law of Japan.

【無線電波を送信する製品の開発キットをお使いになる際の注意事項】 開発キットの中には技術基準適合証明を受けていないものがあります。 技術適合証明を受けていないもののご使用に際しては、電波法遵守のため、以下のいずれかの措置を取っていただく必要がありますのでご注意ください。

1. 電波法施行規則第6条第1項第1号に基づく平成18年3月28日総務省告示第173号で定められた電波暗室等の試験設備でご使用いただく。
2. 実験局の免許を取得後ご使用いただく。
3. 技術基準適合証明を取得後ご使用いただく。

なお、本製品は、上記の「ご使用にあたっての注意」を譲渡先、移転先に通知しない限り、譲渡、移転できないものとします。

上記を遵守頂けない場合は、電波法の罰則が適用される可能性があることをご留意ください。 日本テキサス・インスツルメンツ株式会社

東京都新宿区西新宿６丁目２４番１号

西新宿三井ビル

3.3.3 *Notice for EVMs for Power Line Communication:* Please see http://www.tij.co.jp/lsds/ti_ja/general/eStore/notice_02.page

電力線搬送波通信についての開発キットをお使いになる際の注意事項については、次のところをご覧ください。http://www.tij.co.jp/lsds/ti_ja/general/eStore/notice_02.page

4 *EVM Use Restrictions and Warnings:*

4.1 EVMS ARE NOT FOR USE IN FUNCTIONAL SAFETY AND/OR SAFETY CRITICAL EVALUATIONS, INCLUDING BUT NOT LIMITED TO EVALUATIONS OF LIFE SUPPORT APPLICATIONS.

4.2 User must read and apply the user guide and other available documentation provided by TI regarding the EVM prior to handling or using the EVM, including without limitation any warning or restriction notices. The notices contain important safety information related to, for example, temperatures and voltages.

4.3 *Safety-Related Warnings and Restrictions:*

4.3.1 User shall operate the EVM within TI's recommended specifications and environmental considerations stated in the user guide, other available documentation provided by TI, and any other applicable requirements and employ reasonable and customary safeguards. Exceeding the specified performance ratings and specifications (including but not limited to input and output voltage, current, power, and environmental ranges) for the EVM may cause personal injury or death, or property damage. If there are questions concerning performance ratings and specifications, User should contact a TI field representative prior to connecting interface electronics including input power and intended loads. Any loads applied outside of the specified output range may also result in unintended and/or inaccurate operation and/or possible permanent damage to the EVM and/or interface electronics. Please consult the EVM user guide prior to connecting any load to the EVM output. If there is uncertainty as to the load specification, please contact a TI field representative. During normal operation, even with the inputs and outputs kept within the specified allowable ranges, some circuit components may have elevated case temperatures. These components include but are not limited to linear regulators, switching transistors, pass transistors, current sense resistors, and heat sinks, which can be identified using the information in the associated documentation. When working with the EVM, please be aware that the EVM may become very warm.

4.3.2 EVMs are intended solely for use by technically qualified, professional electronics experts who are familiar with the dangers and application risks associated with handling electrical mechanical components, systems, and subsystems. User assumes all responsibility and liability for proper and safe handling and use of the EVM by User or its employees, affiliates, contractors or designees. User assumes all responsibility and liability to ensure that any interfaces (electronic and/or mechanical) between the EVM and any human body are designed with suitable isolation and means to safely limit accessible leakage currents to minimize the risk of electrical shock hazard. User assumes all responsibility and liability for any improper or unsafe handling or use of the EVM by User or its employees, affiliates, contractors or designees.

4.4 User assumes all responsibility and liability to determine whether the EVM is subject to any applicable international, federal, state, or local laws and regulations related to User's handling and use of the EVM and, if applicable, User assumes all responsibility and liability for compliance in all respects with such laws and regulations. User assumes all responsibility and liability for proper disposal and recycling of the EVM consistent with all applicable international, federal, state, and local requirements.

5. *Accuracy of Information:* To the extent TI provides information on the availability and function of EVMs, TI attempts to be as accurate as possible. However, TI does not warrant the accuracy of EVM descriptions, EVM availability or other information on its websites as accurate, complete, reliable, current, or error-free.

6. *Disclaimers:*

   6.1 EXCEPT AS SET FORTH ABOVE, EVMS AND ANY WRITTEN DESIGN MATERIALS PROVIDED WITH THE EVM (AND THE DESIGN OF THE EVM ITSELF) ARE PROVIDED "AS IS" AND "WITH ALL FAULTS." TI DISCLAIMS ALL OTHER WARRANTIES, EXPRESS OR IMPLIED, REGARDING SUCH ITEMS, INCLUDING BUT NOT LIMITED TO ANY IMPLIED WARRANTIES OF MERCHANTABILITY OR FITNESS FOR A PARTICULAR PURPOSE OR NON-INFRINGEMENT OF ANY THIRD PARTY PATENTS, COPYRIGHTS, TRADE SECRETS OR OTHER INTELLECTUAL PROPERTY RIGHTS.

   6.2 EXCEPT FOR THE LIMITED RIGHT TO USE THE EVM SET FORTH HEREIN, NOTHING IN THESE TERMS AND CONDITIONS SHALL BE CONSTRUED AS GRANTING OR CONFERRING ANY RIGHTS BY LICENSE, PATENT, OR ANY OTHER INDUSTRIAL OR INTELLECTUAL PROPERTY RIGHT OF TI, ITS SUPPLIERS/LICENSORS OR ANY OTHER THIRD PARTY, TO USE THE EVM IN ANY FINISHED END-USER OR READY-TO-USE FINAL PRODUCT, OR FOR ANY INVENTION, DISCOVERY OR IMPROVEMENT MADE, CONCEIVED OR ACQUIRED PRIOR TO OR AFTER DELIVERY OF THE EVM.

7. *USER'S INDEMNITY OBLIGATIONS AND REPRESENTATIONS.* USER WILL DEFEND, INDEMNIFY AND HOLD TI, ITS LICENSORS AND THEIR REPRESENTATIVES HARMLESS FROM AND AGAINST ANY AND ALL CLAIMS, DAMAGES, LOSSES, EXPENSES, COSTS AND LIABILITIES (COLLECTIVELY, "CLAIMS") ARISING OUT OF OR IN CONNECTION WITH ANY HANDLING OR USE OF THE EVM THAT IS NOT IN ACCORDANCE WITH THESE TERMS AND CONDITIONS. THIS OBLIGATION SHALL APPLY WHETHER CLAIMS ARISE UNDER STATUTE, REGULATION, OR THE LAW OF TORT, CONTRACT OR ANY OTHER LEGAL THEORY, AND EVEN IF THE EVM FAILS TO PERFORM AS DESCRIBED OR EXPECTED.

8. *Limitations on Damages and Liability:*

   8.1 *General Limitations*. IN NO EVENT SHALL TI BE LIABLE FOR ANY SPECIAL, COLLATERAL, INDIRECT, PUNITIVE, INCIDENTAL, CONSEQUENTIAL, OR EXEMPLARY DAMAGES IN CONNECTION WITH OR ARISING OUT OF THESE TERMS ANDCONDITIONS OR THE USE OF THE EVMS PROVIDED HEREUNDER, REGARDLESS OF WHETHER TI HAS BEEN ADVISED OF THE POSSIBILITY OF SUCH DAMAGES. EXCLUDED DAMAGES INCLUDE, BUT ARE NOT LIMITED TO, COST OF REMOVAL OR REINSTALLATION, ANCILLARY COSTS TO THE PROCUREMENT OF SUBSTITUTE GOODS OR SERVICES, RETESTING, OUTSIDE COMPUTER TIME, LABOR COSTS, LOSS OF GOODWILL, LOSS OF PROFITS, LOSS OF SAVINGS, LOSS OF USE, LOSS OF DATA, OR BUSINESS INTERRUPTION. NO CLAIM, SUIT OR ACTION SHALL BE BROUGHT AGAINST TI MORE THAN ONE YEAR AFTER THE RELATED CAUSE OF ACTION HAS OCCURRED.

   8.2 *Specific Limitations.* IN NO EVENT SHALL TI'S AGGREGATE LIABILITY FROM ANY WARRANTY OR OTHER OBLIGATION ARISING OUT OF OR IN CONNECTION WITH THESE TERMS AND CONDITIONS, OR ANY USE OF ANY TI EVM PROVIDED HEREUNDER, EXCEED THE TOTAL AMOUNT PAID TO TI FOR THE PARTICULAR UNITS SOLD UNDER THESE TERMS AND CONDITIONS WITH RESPECT TO WHICH LOSSES OR DAMAGES ARE CLAIMED. THE EXISTENCE OF MORE THAN ONE CLAIM AGAINST THE PARTICULAR UNITS SOLD TO USER UNDER THESE TERMS AND CONDITIONS SHALL NOT ENLARGE OR EXTEND THIS LIMIT.

9. *Return Policy.* Except as otherwise provided, TI does not offer any refunds, returns, or exchanges. Furthermore, no return of EVM(s) will be accepted if the package has been opened and no return of the EVM(s) will be accepted if they are damaged or otherwise not in a resalable condition. If User feels it has been incorrectly charged for the EVM(s) it ordered or that delivery violates the applicable order, User should contact TI. All refunds will be made in full within thirty (30) working days from the return of the components(s), excluding any postage or packaging costs.

10. *Governing Law:* These terms and conditions shall be governed by and interpreted in accordance with the laws of the State of Texas, without reference to conflict-of-laws principles. User agrees that non-exclusive jurisdiction for any dispute arising out of or relating to these terms and conditions lies within courts located in the State of Texas and consents to venue in Dallas County, Texas. Notwithstanding the foregoing, any judgment may be enforced in any United States or foreign court, and TI may seek injunctive relief in any United States or foreign court.

Mailing Address: Texas Instruments, Post Office Box 655303, Dallas, Texas 75265
Copyright © 2015, Texas Instruments Incorporated

IMPORTANT NOTICE

Texas Instruments Incorporated and its subsidiaries (TI) reserve the right to make corrections, enhancements, improvements and other changes to its semiconductor products and services per JESD46, latest issue, and to discontinue any product or service per JESD48, latest issue. Buyers should obtain the latest relevant information before placing orders and should verify that such information is current and complete. All semiconductor products (also referred to herein as “components”) are sold subject to TI’s terms and conditions of sale supplied at the time of order acknowledgment.

TI warrants performance of its components to the specifications applicable at the time of sale, in accordance with the warranty in TI’s terms and conditions of sale of semiconductor products. Testing and other quality control techniques are used to the extent TI deems necessary to support this warranty. Except where mandated by applicable law, testing of all parameters of each component is not necessarily performed.

TI assumes no liability for applications assistance or the design of Buyers’ products. Buyers are responsible for their products and applications using TI components. To minimize the risks associated with Buyers’ products and applications, Buyers should provide adequate design and operating safeguards.

TI does not warrant or represent that any license, either express or implied, is granted under any patent right, copyright, mask work right, or other intellectual property right relating to any combination, machine, or process in which TI components or services are used. Information published by TI regarding third-party products or services does not constitute a license to use such products or services or a warranty or endorsement thereof. Use of such information may require a license from a third party under the patents or other intellectual property of the third party, or a license from TI under the patents or other intellectual property of TI.

Reproduction of significant portions of TI information in TI data books or data sheets is permissible only if reproduction is without alteration and is accompanied by all associated warranties, conditions, limitations, and notices. TI is not responsible or liable for such altered documentation. Information of third parties may be subject to additional restrictions.

Resale of TI components or services with statements different from or beyond the parameters stated by TI for that component or service voids all express and any implied warranties for the associated TI component or service and is an unfair and deceptive business practice. TI is not responsible or liable for any such statements.

Buyer acknowledges and agrees that it is solely responsible for compliance with all legal, regulatory and safety-related requirements concerning its products, and any use of TI components in its applications, notwithstanding any applications-related information or support that may be provided by TI. Buyer represents and agrees that it has all the necessary expertise to create and implement safeguards which anticipate dangerous consequences of failures, monitor failures and their consequences, lessen the likelihood of failures that might cause harm and take appropriate remedial actions. Buyer will fully indemnify TI and its representatives against any damages arising out of the use of any TI components in safety-critical applications.

In some cases, TI components may be promoted specifically to facilitate safety-related applications. With such components, TI’s goal is to help enable customers to design and create their own end-product solutions that meet applicable functional safety standards and requirements. Nonetheless, such components are subject to these terms.

No TI components are authorized for use in FDA Class III (or similar life-critical medical equipment) unless authorized officers of the parties have executed a special agreement specifically governing such use.

Only those TI components which TI has specifically designated as military grade or “enhanced plastic” are designed and intended for use in military/aerospace applications or environments. Buyer acknowledges and agrees that any military or aerospace use of TI components which have ***not*** been so designated is solely at the Buyer's risk, and that Buyer is solely responsible for compliance with all legal and regulatory requirements in connection with such use.

TI has specifically designated certain components as meeting ISO/TS16949 requirements, mainly for automotive use. In any case of use of non-designated products, TI will not be responsible for any failure to meet ISO/TS16949.

Products		**Applications**	
Audio	www.ti.com/audio	Automotive and Transportation	www.ti.com/automotive
Amplifiers	amplifier.ti.com	Communications and Telecom	www.ti.com/communications
Data Converters	dataconverter.ti.com	Computers and Peripherals	www.ti.com/computers
DLP® Products	www.dlp.com	Consumer Electronics	www.ti.com/consumer-apps
DSP	dsp.ti.com	Energy and Lighting	www.ti.com/energy
Clocks and Timers	www.ti.com/clocks	Industrial	www.ti.com/industrial
Interface	interface.ti.com	Medical	www.ti.com/medical
Logic	logic.ti.com	Security	www.ti.com/security
Power Mgmt	power.ti.com	Space, Avionics and Defense	www.ti.com/space-avionics-defense
Microcontrollers	microcontroller.ti.com	Video and Imaging	www.ti.com/video
RFID	www.ti-rfid.com		
OMAP Applications Processors	www.ti.com/omap	**TI E2E Community**	e2e.ti.com
Wireless Connectivity	www.ti.com/wirelessconnectivity		

Mailing Address: Texas Instruments, Post Office Box 655303, Dallas, Texas 75265
Copyright © 2015, Texas Instruments Incorporated