LM4431 Micropower Shunt Voltage Reference

Check for Samples: LM4431

FEATURES

- **Small Package: SOT-23**
- **No Output Capacitor Required**
- **Tolerates Capacitive Loads**
- **Fixed Reverse Breakdown Voltage of 2.50V**

APPLICATIONS

- **Portable, Battery-Powered Equipment**
- **Data Acquisition Systems**
- **Instrumentation**
- **Process Control**
- **Energy Management**
- **Product Testing**
- **Power Supplies**

KEY SPECIFICATIONS

- **Output Voltage Tolerance: 25°C: ±2.0% (Max)**
- **Low Output Noise (10 Hz to 10 kHz): 35 μV_{rms} (Typ)**
- **Wide Operating Current Range: 100 µA to 15 mA**
- **Commercial Temperature Range: 0 to +70 °C**
- **Low Temperature Coefficient: 30 ppm/°C (Typ)**

DESCRIPTION

Ideal for space critical applications, the LM4431 voltage reference is available in the sub-miniature (3 mm x 1.3 mm) SOT-23 surface-mount package. The LM4431's advanced design eliminates the need for an external stabilizing capacitor while ensuring stability with any capacitive load, thus making the LM4431 easy to use. The operating current range is 100 µA to 15 mA.

The LM4431 utilizes fuse and zener-zap reverse breakdown voltage trim during wafer sort to ensure that the parts have an accuracy of better than ±2.0% at 25°C. Bandgap reference temperature drift curvature correction and low dynamic impedance ensure stable reverse breakdown voltage accuracy over a wide range of operating temperatures and currents.

Connection Diagram

Top View

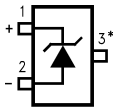

* This pin must be left floating or connected to pin 2.

Figure 1. SOT-23 Package
See Package Number DBZ0003A

These devices have limited built-in ESD protection. The leads should be shorted together or the device placed in conductive foam during storage or handling to prevent electrostatic damage to the MOS gates.

Please be aware that an important notice concerning availability, standard warranty, and use in critical applications of Texas Instruments semiconductor products and disclaimers thereto appears at the end of this data sheet.

All trademarks are the property of their respective owners.

PRODUCTION DATA information is current as of publication date. Products conform to specifications per the terms of the Texas Instruments standard warranty. Production processing does not necessarily include testing of all parameters.

Copyright © 2000–2013, Texas Instruments Incorporated

Absolute Maximum Ratings[1][2]

Reverse Current			20 mA
Forward Current			10 mA
Power Dissipation (T_A = 25°C)[3]		DBZ0003A Package	306 mW
Storage Temperature			−65°C to +150°C
Lead Temperature	DBZ0003A Package	Vapor phase (60 seconds)	+215°C
		Infrared (15 seconds)	+220°C
ESD Susceptibility		Human Body Model[4]	2 kV
		Machine Model[4]	200V

(1) Absolute Maximum Ratings indicate limits beyond which damage to the device may occur. Operating Ratings indicate conditions for which the device is functional, but do not ensure specific performance limits. For ensured specifications and test conditions, see the Electrical Characteristics. The specified specifications apply only for the test conditions listed. Some performance characteristics may degrade when the device is not operated under the listed test conditions.
(2) If Military/Aerospace specified devices are required, please contact the Texas Instruments Sales Office/Distributors for availability and specifications.
(3) The maximum power dissipation must be derated at elevated temperatures and is dictated by T_{Jmax} (maximum junction temperature), θ_{JA} (junction to ambient thermal resistance), and T_A (ambient temperature). The maximum allowable power dissipation at any temperature is $PD_{max} = (T_{Jmax} - T_A)/\theta_{JA}$ or the number given in the Absolute Maximum Ratings, whichever is lower. For the LM4431, T_{Jmax} = 125°C, and the typical thermal resistance (θ_{JA}), when board mounted, is 326°C/W for the SOT-23 package.
(4) The human body model is a 100 pF capacitor discharged through a 1.5 kΩ resistor into each pin. The machine model is a 200 pF capacitor discharged directly into each pin.

Operating Ratings[1][2]

Temperature Range ($T_{min} \le T_A \le T_{max}$)		0°C ≤ T_A ≤ +70°C
Reverse Current	LM4431-2.5	100 µA to 15 mA

(1) Absolute Maximum Ratings indicate limits beyond which damage to the device may occur. Operating Ratings indicate conditions for which the device is functional, but do not ensure specific performance limits. For ensured specifications and test conditions, see the Electrical Characteristics. The specified specifications apply only for the test conditions listed. Some performance characteristics may degrade when the device is not operated under the listed test conditions.
(2) The maximum power dissipation must be derated at elevated temperatures and is dictated by T_{Jmax} (maximum junction temperature), θ_{JA} (junction to ambient thermal resistance), and T_A (ambient temperature). The maximum allowable power dissipation at any temperature is $PD_{max} = (T_{Jmax} - T_A)/\theta_{JA}$ or the number given in the Absolute Maximum Ratings, whichever is lower. For the LM4431, T_{Jmax} = 125°C, and the typical thermal resistance (θ_{JA}), when board mounted, is 326°C/W for the SOT-23 package.

Copyright © 2000–2013, Texas Instruments Incorporated

LM4431-2.5 Electrical Characteristics

Boldface limits apply for $T_A = T_J = T_{MIN}$ to T_{MAX}; all other limits $T_A = T_J = 25°C$.

Symbol	Parameter	Conditions	Typical (1)	LM4431M3 Limits (2)	Units (Limit)
V_R	Reverse Breakdown Voltage	I_R = 100 µA	2.500		V
	Reverse Breakdown VoltageTolerance	I_R = 100 µA		±50	mV (max)
I_{RMIN}	Minimum Operating Current		45		µA
				100	µA (max)
$\Delta V_R/\Delta T$	Average Reverse Breakdown Voltage Temperature Coefficient	I_R = 10 mA	±30		ppm/°C
		I_R = 1 mA	±30		ppm/°C
		I_R = 100 µA	±30		ppm/°C
$\Delta V_R/\Delta I_R$	Reverse Breakdown Voltage Change with Operating Current Change	$I_{RMIN} \le I_R \le$ 1 mA	0.4		mV
				1.0	mV (max)
				1.2	mV (max)
		1 mA $\le I_R \le$ 15 mA	2.5		mV
				8.0	mV (max)
				25	mV (max)
Z_R	Reverse Dynamic Impedance	I_R = 1 mA, f = 120 Hz, I_{AC} = 0.1 I_R	1.0		Ω
e_N	Wideband Noise	I_R = 100 µA, 10 Hz ≤ f ≤ 10 kHz	35		μV_{rms}
ΔV_R	Reverse Breakdown Voltage Long Term Stability	t = 1000 hrs T = 25°C ±0.1°C I_R = 100 µA	120		ppm

(1) Typicals are at T_J = 25°C and represent most likely parametric norm.
(2) Limits are 100% production tested at 25°C. Limits over temperature are ensured through correlation using Statistical Quality Control (SQC) methods. The limits are used to calculate AOQL.

Copyright © 2000–2013, Texas Instruments Incorporated

Typical Performance Characteristics

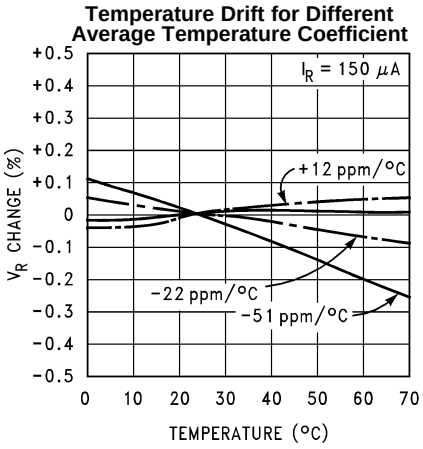

Figure 2.

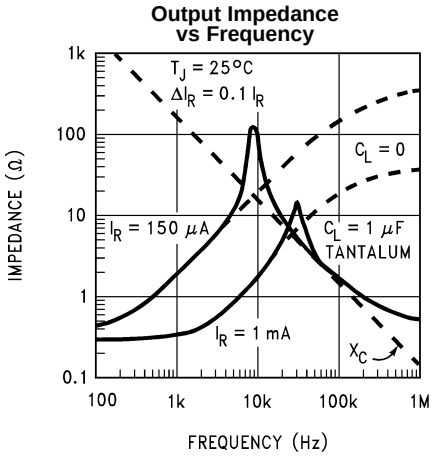

Figure 3.

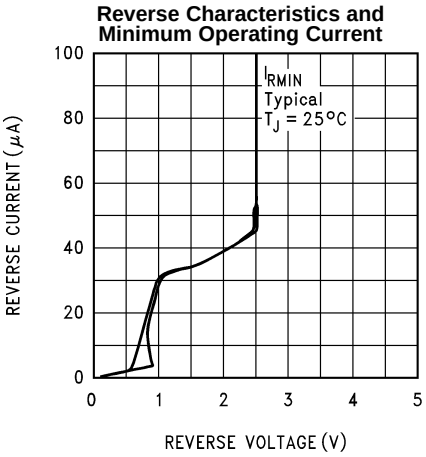

Figure 4.

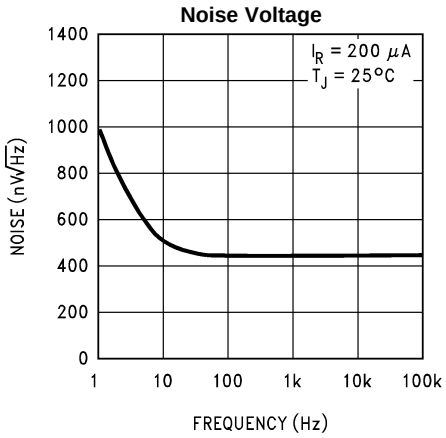

Figure 5.

Start-Up Characteristics

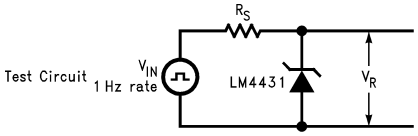

Figure 6. Test Circuit

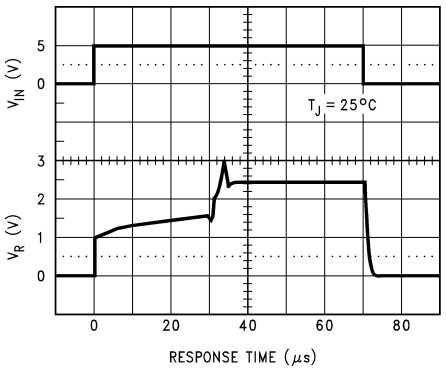

Figure 7. LM4431-2.5, R_S = 30k

Copyright © 2000–2013, Texas Instruments Incorporated

Functional Block Diagram

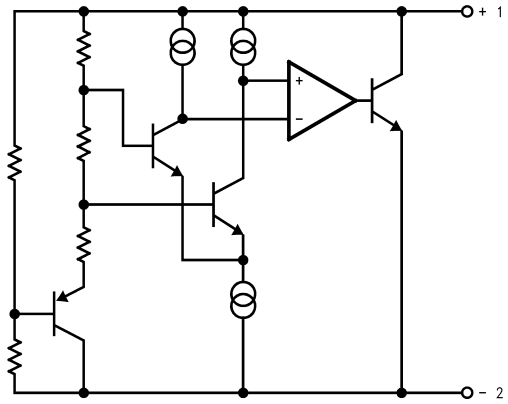

APPLICATIONS INFORMATION

The LM4431 is a micro-power curvature-corrected 2.5V bandgap shunt voltage reference. For space critical applications, the LM4431 is available in the sub-miniature SOT-23 surface-mount package. The LM4431 has been designed for stable operation without the need of an external capacitor connected between the "+" pin and the "−" pin. If, however, a bypass capacitor is used, the LM4431 remains stable. The operating current range is 100 µA to 15 mA.

The LM4431's SOT-23 package has a parasitic Schottky diode between pin 2 (−) and pin 3 (Die attach interface contact). Therefore, pin 3 of the SOT-23 package must be left floating or connected to pin 2.

In a conventional shunt regulator application (Figure 8), an external series resistor (R_S) is connected between the supply voltage and the LM4431. R_S determines the current that flows through the load (I_L) and the LM4431 (I_Q). Since load current and supply voltage may vary, R_S should be small enough to supply at least the minimum acceptable I_Q to the LM4431 even when the supply voltage is at its minimum and the load current is at its maximum value. When the supply voltage is at its maximum and I_L is at its minimum, R_S should be large enough so that the current flowing through the LM4431 is less than 15 mA.

R_S is determined by the supply voltage, (V_S), the load and operating current, (I_L and I_Q), and the LM4431's reverse breakdown voltage, V_R.

$$R_S = \frac{V_S - V_R}{I_L + I_Q} \tag{1}$$

Typical Applications

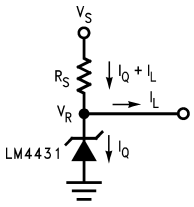

Figure 8. Shunt Regulator

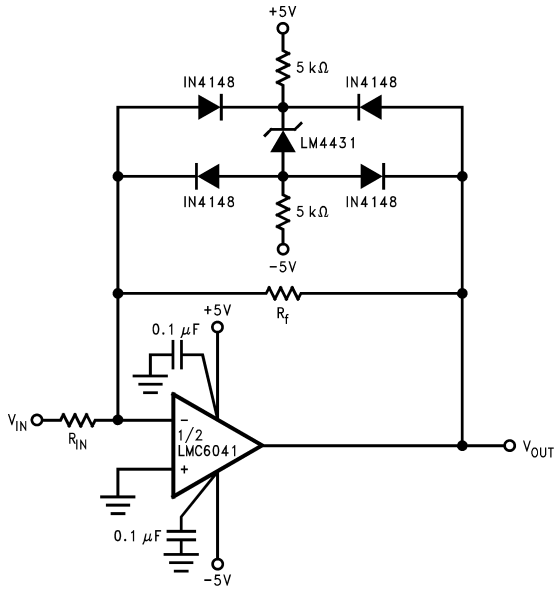

Figure 9. Bounded amplifier reduces saturation-induced delays and can prevent succeeding stage damage. Nominal clamping voltage is ±3.9V (LM4431's reverse breakdown voltage +2 diode V_F).

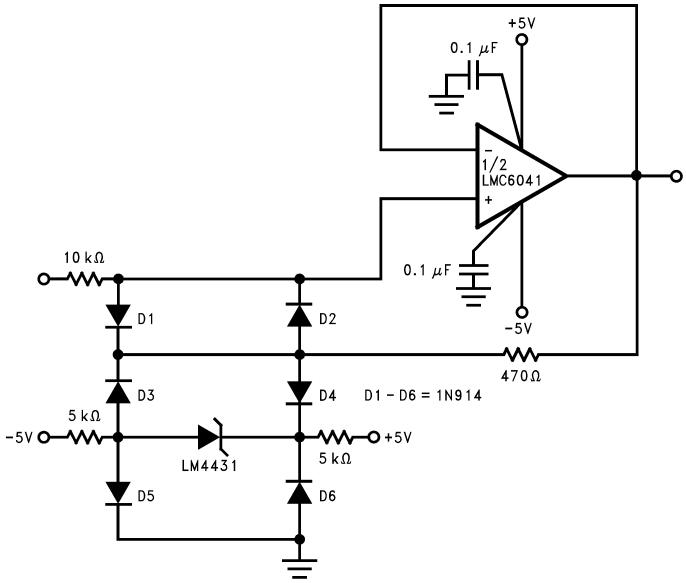

Figure 10. Protecting Op Amp input. The bounding voltage is ±4V with the LM4431 (LM4431's reverse breakdown voltage + 3 diode V_F).

Copyright © 2000–2013, Texas Instruments Incorporated

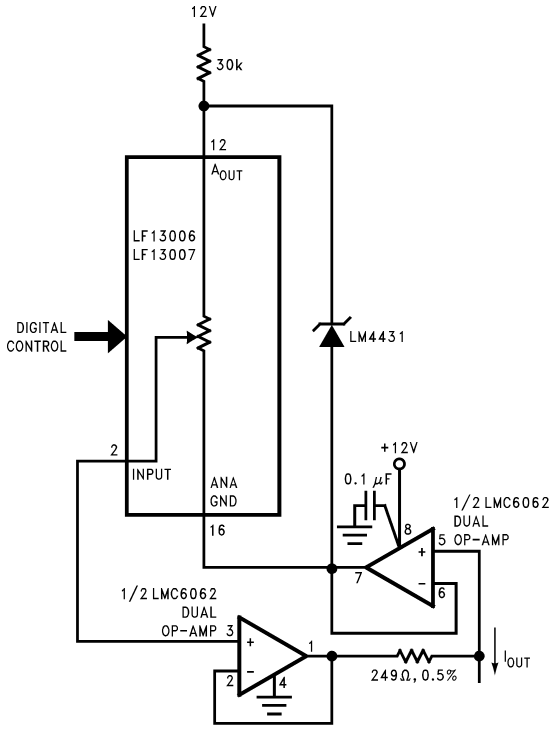

$$I_{OUT} = \frac{2.5V}{249\Omega}\left[\frac{1}{\text{gain set \#}}\right]$$

Figure 11. Programmable Current Source

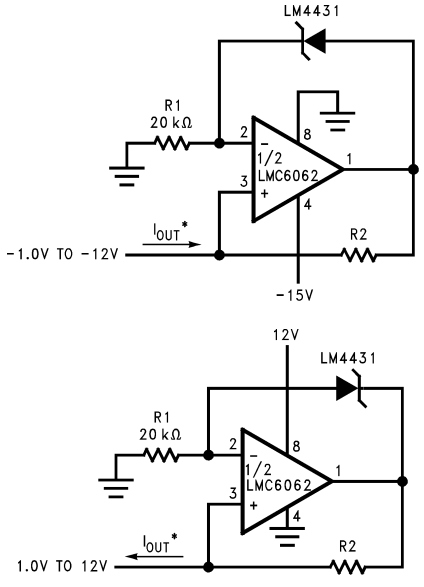

$$^*I_{OUT} = \frac{2.5V}{R2}$$

Figure 12. Precision 1 µA to 1 mA Current Sources

REVISION HISTORY

Changes from Revision B (April 2013) to Revision C	Page
• Changed layout of National Data Sheet to TI format	7

Copyright © 2000–2013, Texas Instruments Incorporated

PACKAGING INFORMATION

Orderable Device	Status (1)	Package Type	Package Drawing	Pins	Package Qty	Eco Plan (2)	Lead/Ball Finish (6)	MSL Peak Temp (3)	Op Temp (°C)	Device Marking (4/5)	Samples
LM4431M3-2.5	NRND	SOT-23	DBZ	3	1000	TBD	Call TI	Call TI	0 to 70	S2E	
LM4431M3-2.5/NOPB	ACTIVE	SOT-23	DBZ	3	1000	Green (RoHS & no Sb/Br)	SN	Level-1-260C-UNLIM	0 to 70	S2E	Samples
LM4431M3X-2.5/NOPB	ACTIVE	SOT-23	DBZ	3	3000	Green (RoHS & no Sb/Br)	SN	Level-1-260C-UNLIM	0 to 70	S2E	Samples

(1) The marketing status values are defined as follows:
ACTIVE: Product device recommended for new designs.
LIFEBUY: TI has announced that the device will be discontinued, and a lifetime-buy period is in effect.
NRND: Not recommended for new designs. Device is in production to support existing customers, but TI does not recommend using this part in a new design.
PREVIEW: Device has been announced but is not in production. Samples may or may not be available.
OBSOLETE: TI has discontinued the production of the device.

(2) **RoHS:** TI defines "RoHS" to mean semiconductor products that are compliant with the current EU RoHS requirements for all 10 RoHS substances, including the requirement that RoHS substance do not exceed 0.1% by weight in homogeneous materials. Where designed to be soldered at high temperatures, "RoHS" products are suitable for use in specified lead-free processes. TI may reference these types of products as "Pb-Free".
RoHS Exempt: TI defines "RoHS Exempt" to mean products that contain lead but are compliant with EU RoHS pursuant to a specific EU RoHS exemption.
Green: TI defines "Green" to mean the content of Chlorine (Cl) and Bromine (Br) based flame retardants meet JS709B low halogen requirements of <=1000ppm threshold. Antimony trioxide based flame retardants must also meet the <=1000ppm threshold requirement.

(3) MSL, Peak Temp. - The Moisture Sensitivity Level rating according to the JEDEC industry standard classifications, and peak solder temperature.

(4) There may be additional marking, which relates to the logo, the lot trace code information, or the environmental category on the device.

(5) Multiple Device Markings will be inside parentheses. Only one Device Marking contained in parentheses and separated by a "~" will appear on a device. If a line is indented then it is a continuation of the previous line and the two combined represent the entire Device Marking for that device.

(6) Lead/Ball Finish - Orderable Devices may have multiple material finish options. Finish options are separated by a vertical ruled line. Lead/Ball Finish values may wrap to two lines if the finish value exceeds the maximum column width.

Important Information and Disclaimer: The information provided on this page represents TI's knowledge and belief as of the date that it is provided. TI bases its knowledge and belief on information provided by third parties, and makes no representation or warranty as to the accuracy of such information. Efforts are underway to better integrate information from third parties. TI has taken and continues to take reasonable steps to provide representative and accurate information but may not have conducted destructive testing or chemical analysis on incoming materials and chemicals. TI and TI suppliers consider certain information to be proprietary, and thus CAS numbers and other limited information may not be available for release.

In no event shall TI's liability arising out of such information exceed the total purchase price of the TI part(s) at issue in this document sold by TI to Customer on an annual basis.

TAPE AND REEL INFORMATION

REEL DIMENSIONS

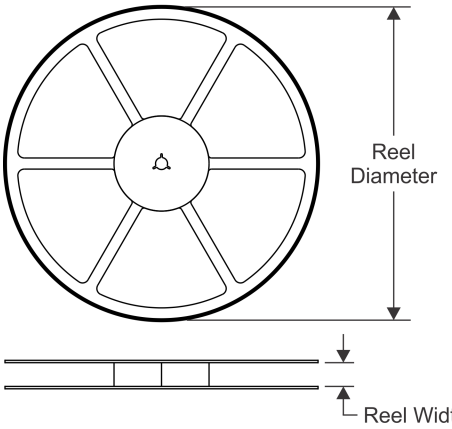

TAPE DIMENSIONS

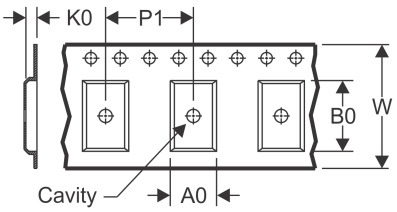

A0	Dimension designed to accommodate the component width
B0	Dimension designed to accommodate the component length
K0	Dimension designed to accommodate the component thickness
W	Overall width of the carrier tape
P1	Pitch between successive cavity centers

QUADRANT ASSIGNMENTS FOR PIN 1 ORIENTATION IN TAPE

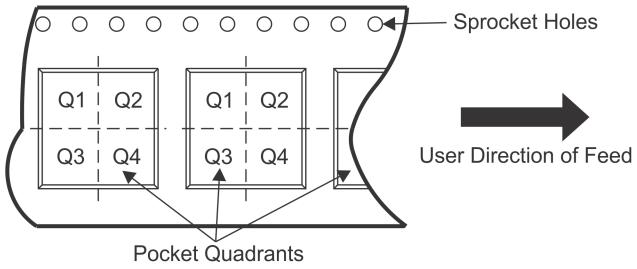

*All dimensions are nominal

Device	Package Type	Package Drawing	Pins	SPQ	Reel Diameter (mm)	Reel Width W1 (mm)	A0 (mm)	B0 (mm)	K0 (mm)	P1 (mm)	W (mm)	Pin1 Quadrant
LM4431M3-2.5	SOT-23	DBZ	3	1000	178.0	8.4	3.3	2.9	1.22	4.0	8.0	Q3
LM4431M3-2.5/NOPB	SOT-23	DBZ	3	1000	178.0	8.4	3.3	2.9	1.22	4.0	8.0	Q3
LM4431M3X-2.5/NOPB	SOT-23	DBZ	3	3000	178.0	8.4	3.3	2.9	1.22	4.0	8.0	Q3

TAPE AND REEL BOX DIMENSIONS

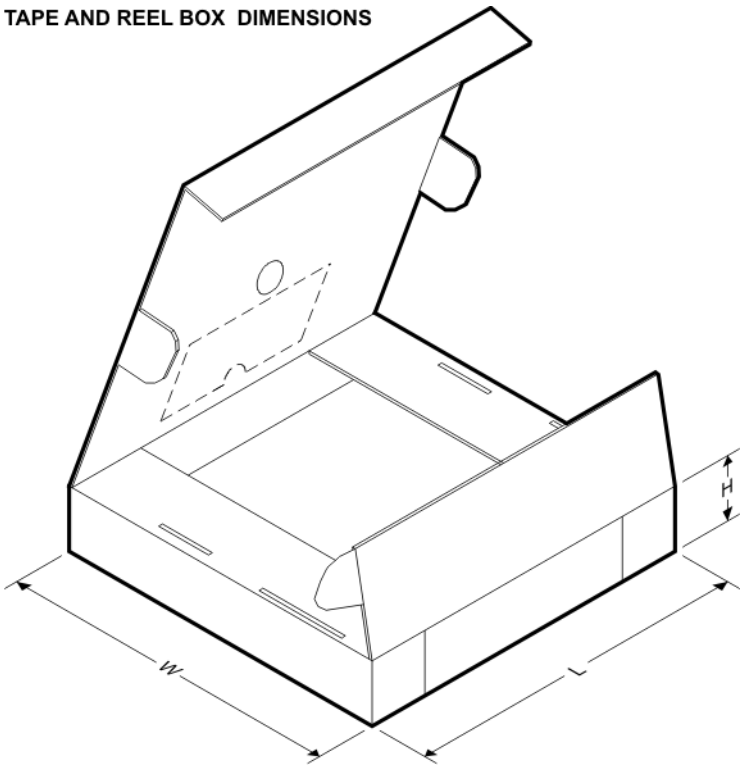

*All dimensions are nominal

Device	Package Type	Package Drawing	Pins	SPQ	Length (mm)	Width (mm)	Height (mm)
LM4431M3-2.5	SOT-23	DBZ	3	1000	210.0	185.0	35.0
LM4431M3-2.5/NOPB	SOT-23	DBZ	3	1000	210.0	185.0	35.0
LM4431M3X-2.5/NOPB	SOT-23	DBZ	3	3000	210.0	185.0	35.0

GENERIC PACKAGE VIEW

DBZ 3 SOT-23 - 1.12 mm max height

SMALL OUTLINE TRANSISTOR

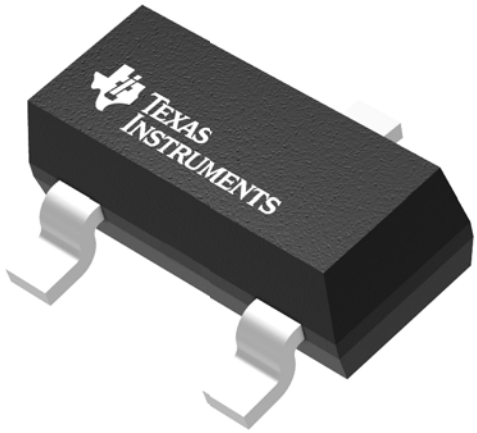

Images above are just a representation of the package family, actual package may vary.
Refer to the product data sheet for package details.

PACKAGE OUTLINE

DBZ0003A

SOT-23 - 1.12 mm max height

SMALL OUTLINE TRANSISTOR

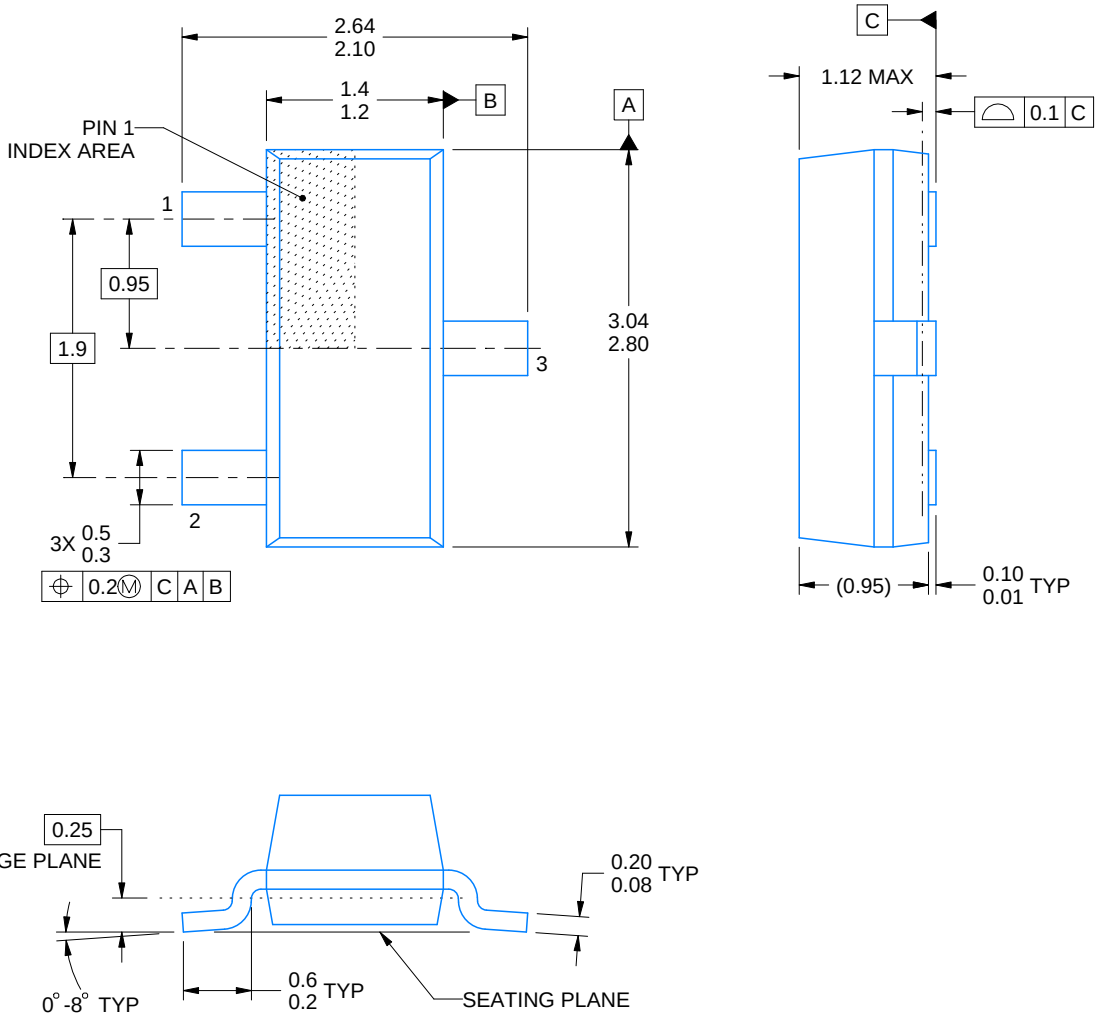

4214838/C 04/2017

NOTES:

1. All linear dimensions are in millimeters. Any dimensions in parenthesis are for reference only. Dimensioning and tolerancing per ASME Y14.5M.
2. This drawing is subject to change without notice.
3. Reference JEDEC registration TO-236, except minimum foot length.

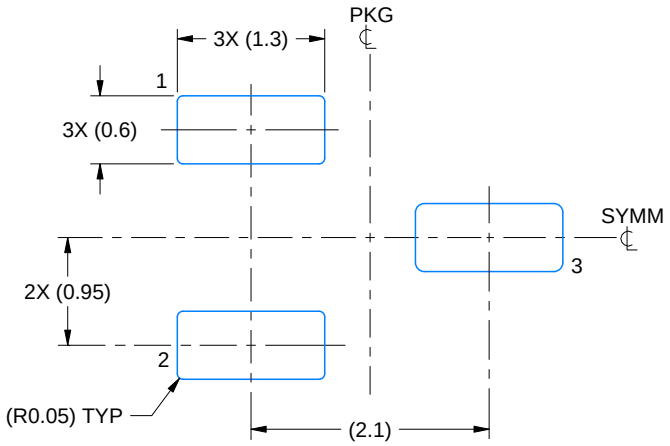

LAND PATTERN EXAMPLE
SCALE:15X

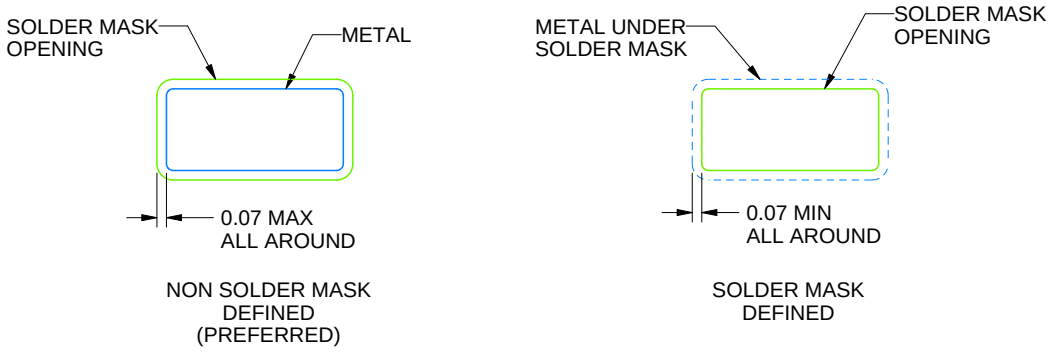

SOLDER MASK DETAILS

4214838/C 04/2017

NOTES: (continued)

4. Publication IPC-7351 may have alternate designs.
5. Solder mask tolerances between and around signal pads can vary based on board fabrication site.

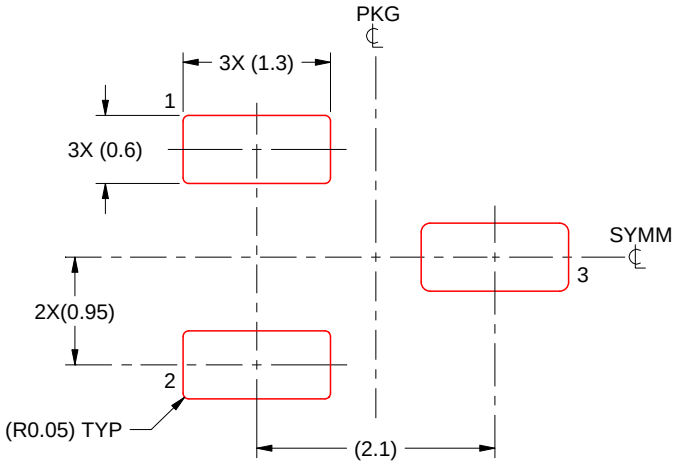

SOLDER PASTE EXAMPLE
BASED ON 0.125 THICK STENCIL
SCALE:15X

4214838/C 04/2017

NOTES: (continued)

6. Laser cutting apertures with trapezoidal walls and rounded corners may offer better paste release. IPC-7525 may have alternate design recommendations.
7. Board assembly site may have different recommendations for stencil design.

IMPORTANT NOTICE AND DISCLAIMER

TI PROVIDES TECHNICAL AND RELIABILITY DATA (INCLUDING DATASHEETS), DESIGN RESOURCES (INCLUDING REFERENCE DESIGNS), APPLICATION OR OTHER DESIGN ADVICE, WEB TOOLS, SAFETY INFORMATION, AND OTHER RESOURCES “AS IS” AND WITH ALL FAULTS, AND DISCLAIMS ALL WARRANTIES, EXPRESS AND IMPLIED, INCLUDING WITHOUT LIMITATION ANY IMPLIED WARRANTIES OF MERCHANTABILITY, FITNESS FOR A PARTICULAR PURPOSE OR NON-INFRINGEMENT OF THIRD PARTY INTELLECTUAL PROPERTY RIGHTS.

These resources are intended for skilled developers designing with TI products. You are solely responsible for (1) selecting the appropriate TI products for your application, (2) designing, validating and testing your application, and (3) ensuring your application meets applicable standards, and any other safety, security, or other requirements. These resources are subject to change without notice. TI grants you permission to use these resources only for development of an application that uses the TI products described in the resource. Other reproduction and display of these resources is prohibited. No license is granted to any other TI intellectual property right or to any third party intellectual property right. TI disclaims responsibility for, and you will fully indemnify TI and its representatives against, any claims, damages, costs, losses, and liabilities arising out of your use of these resources.

TI’s products are provided subject to TI’s Terms of Sale (www.ti.com/legal/termsofsale.html) or other applicable terms available either on ti.com or provided in conjunction with such TI products. TI’s provision of these resources does not expand or otherwise alter TI’s applicable warranties or warranty disclaimers for TI products.

Mailing Address: Texas Instruments, Post Office Box 655303, Dallas, Texas 75265
Copyright © 2020, Texas Instruments Incorporated