LM4050-N/LM4050-N-Q1 Precision Micropower Shunt Voltage Reference

Check for Samples: LM4050-N, LM4050-N-Q1

FEATURES

- **Small Package: SOT-23**
- **No Output Capacitor Required**
- **Tolerates Capacitive Loads**
- **Fixed Reverse Breakdown Voltages of 2.048V, 2.500V, 4.096V, 5.000V, 8.192V, and 10.000V**

APPLICATIONS

- **Portable, Battery-Powered Equipment**
- **Data Acquisition Systems**
- **Instrumentation**
- **Process Control**
- **Energy Management**
- **Product Testing**
- **Automotive**
- **Precision Audio Components**

KEY SPECIFICATIONS (LM4050-N-2.5)

- **Output Voltage Tolerance (A grade, 25°C) ±0.1% (max)**
- **Low Output Noise (10 Hz to 10 kHz) 41 µVrms(typ)**
- **Wide Operating Current Range 60 µA to 15 mA**
- **Industrial Temperature Range −40°C to +85°C**
- **Extended Temperature Range −40°C to +125°C**
- **Low Temperature Coefficient 50 ppm/°C (max)**
- **LM4050-N-Q1A/-Q1B/-1QC are AECQ100 Grade 1 Qualified and are Manufactured on an Automotive Grade Flow**

DESCRIPTION

Ideal for space critical applications, the LM4050-N precision voltage reference is available in the sub-miniature (3 mm x 1.3 mm) SOT-23 surface-mount package. The LM4050-N design eliminates the need for an external stabilizing capacitor while ensuring stability with any capacitive load, thus making the LM4050-N easy to use. Further reducing design effort is the availability of several fixed reverse breakdown voltages: 2.048V, 2.500V, 4.096V, 5.000V, 8.192V, and 10.000V. The minimum operating current increases from 60 µA for the LM4050-N-2.0 to 100 µA for the LM4050-N-10.0. All versions have a maximum operating current of 15 mA.

The LM4050-N utilizes fuse and zener-zap reverse breakdown voltage trim during wafer sort to ensure that the prime parts have an accuracy of better than ±0.1% (A grade) at 25°C. Bandgap reference temperature drift curvature correction and low dynamic impedance ensure stable reverse breakdown voltage accuracy over a wide range of operating temperatures and currents.

All grades and voltage options of the LM4050-N are available in both an industrial temperature range (−40°C and +85°C) and an extended temperature range (−40°C and +125°C).

CONNECTION DIAGRAM

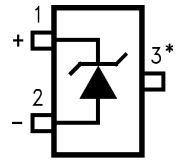

*This pin must be left floating or connected to pin 2.

Figure 1. SOT-23, Top View

Please be aware that an important notice concerning availability, standard warranty, and use in critical applications of Texas Instruments semiconductor products and disclaimers thereto appears at the end of this data sheet.

All trademarks are the property of their respective owners.

PRODUCTION DATA information is current as of publication date. Products conform to specifications per the terms of the Texas Instruments standard warranty. Production processing does not necessarily include testing of all parameters.

Copyright © 2000–2013, Texas Instruments Incorporated

These devices have limited built-in ESD protection. The leads should be shorted together or the device placed in conductive foam during storage or handling to prevent electrostatic damage to the MOS gates.

Absolute Maximum Ratings(1)(2)

Reverse Current			20 mA
Forward Current			10 mA
Power Dissipation (T_A = 25°C)(3)		DBZ Package	280 mW
Storage Temperature			−65°C to +150°C
Lead Temperature	DBZ Package	Vapor phase (60 seconds)	+215°C
		Infrared (15 seconds)	+220°C
ESD Susceptibility		Human Body Model(4)	2 kV
		Machine Model(4)	200V
See AN-450 “Surface Mounting Methods and Their Effect on Product Reliability” for other methods of soldering surface mount devices.			

(1) Absolute Maximum Ratings indicate limits beyond which damage to the device may occur. Operating Ratings indicate conditions for which the device is functional, but do not guarantee specific performance limits. For guaranteed specifications and test conditions, see the Electrical Characteristics. The guaranteed specifications apply only for the test conditions listed. Some performance characteristics may degrade when the device is not operated under the listed test conditions.

(2) If Military/Aerospace specified devices are required, please contact the Texas Instruments Sales Office/ Distributors for availability and specifications.

(3) The maximum power dissipation must be derated at elevated temperatures and is dictated by T_{Jmax} (maximum junction temperature), θ_{JA} (junction to ambient thermal resistance), and T_A (ambient temperature). The maximum allowable power dissipation at any temperature is $PD_{max} = (T_{Jmax} - T_A)/\theta_{JA}$ or the number given in the Absolute Maximum Ratings, whichever is lower. For the LM4050-N, T_{Jmax} = 125°C, and the typical thermal resistance (θ_{JA}), when board mounted, is 326°C/W for the SOT-23 package.

(4) The human body model is a 100 pF capacitor discharged through a 1.5 kΩ resistor into each pin. The machine model is a 200 pF capacitor discharged directly into each pin.

Operating Ratings(1)

Temperature Range		($T_{min} \le T_A \le T_{max}$)
Industrial Temperature Range		−40°C ≤ T_A ≤ +85°C
Extended temperature Range		−40°C ≤ T_A ≤ +125°C
Reverse Current	LM4050-N-2.0,	60 µA to 15 mA
	LM4050-N-2.5	60 µA to 15 mA
	LM4050-N-4.1	68 µA to 15 mA
	LM4050-N-5.0	74 µA to 15 mA
	LM4050-N-8.2	91 µA to 15 mA
	LM4050-N-10.0	100 µA to 15 mA

(1) The maximum power dissipation must be derated at elevated temperatures and is dictated by T_{Jmax} (maximum junction temperature), θ_{JA} (junction to ambient thermal resistance), and T_A (ambient temperature). The maximum allowable power dissipation at any temperature is $PD_{max} = (T_{Jmax} - T_A)/\theta_{JA}$ or the number given in the Absolute Maximum Ratings, whichever is lower. For the LM4050-N, T_{Jmax} = 125°C, and the typical thermal resistance (θ_{JA}), when board mounted, is 326°C/W for the SOT-23 package.

Copyright © 2000–2013, Texas Instruments Incorporated

LM4050-N-2.0 Electrical Characteristics

Boldface limits apply for $T_A = T_J = T_{MIN}$ to T_{MAX}; all other limits $T_A = T_J = 25°C$. The grades A, B and C designate initial Reverse Breakdown Voltage tolerances of ±0.1%, ±0.2%, and 0.5% respectively.

Symbol	Parameter	Conditions	Typical[1]	LM4050-NAIM3 LM4050-NAEM3 Limits[2]	LM4050-NBIM3 LM4050-NBEM3 Limits[2]	LM4050-NCIM3 LM4050-NCEM3 Limits[2]	Units (Limit)
V_R	Reverse Breakdown Voltage	I_R = 100 µA	2.048				V
	Reverse Breakdown Voltage Tolerance[3]	I_R = 100 µA		±2.048	±4.096	±10.24	mV (max)
		Industrial Temp. Range		**±9.0112**	**±11.4688**	**±14.7456**	mV (max)
		Extended Temp. Range		**±12.288**	**±14.7456**	**±17.2032**	mV (max)
I_{RMIN}	Minimum Operating Current		41				µA
				60	60	60	µA (max)
				65	**65**	**65**	µA (max)
$\Delta V_R/\Delta T$	Average Reverse Breakdown Voltage Temperature Coefficient[3]	I_R = 10 mA	±20				ppm/°C
		I_R = 1 mA	±15				ppm/°C
		I_R = 100 µA	±15	**±50**	**±50**	**±50**	ppm/°C (max)
$\Delta V_R/\Delta I_R$	Reverse Breakdown Voltage Change with Operating Current Change[4]	$I_{RMIN} \le I_R \le$ 1 mA	0.3				mV
				0.8	0.8	0.8	mV (max)
				1.2	**1.2**	**1.2**	mV (max)
		1 mA ≤ $I_R \le$ 15 mA	2.3				mV
				6.0	6.0	6.0	mV (max)
				8.0	**8.0**	**8.0**	mV (max)
Z_R	Reverse Dynamic Impedance	I_R = 1 mA, f = 120 Hz, I_{AC} = 0.1 I_R	0.3				Ω
e_N	Wideband Noise	I_R = 100 µA 10 Hz ≤ f ≤ 10 kHz	34				μV_{rms}
ΔV_R	Reverse Breakdown Voltage Long Term Stability	t = 1000 hrs T = 25°C ±0.1°C I_R = 100 µA	120				ppm
V_{HYST}	Thermal Hysteresis[5]	ΔT = −40°C to 125°C	0.7				mV

(1) Typicals are at T_J = 25°C and represent most likely parametric norm.
(2) Limits are 100% production tested at 25°C. Limits over temperature are guaranteed through correlation using Statistical Quality Control (SQC) methods. The limits are used to calculate National's AOQL.
(3) The boldface (over-temperature) limit for Reverse Breakdown Voltage Tolerance is defined as the room temperature Reverse Breakdown Voltage Tolerance ±[($\Delta V_R/\Delta T$)(maxΔT)(V_R)]. Where, $\Delta V_R/\Delta T$ is the V_R temperature coefficient, maxΔT is the maximum difference in temperature from the reference point of 25°C to T_{MIN} or T_{MAX}, and V_R is the reverse breakdown voltage. The total over-temperature tolerance for the different grades in the industrial temperature range where maxΔT = 65°C is shown below: A-grade: ±0.425% = ±0.1% ±50 ppm/°C × 65°C B-grade: ±0.525% = ±0.2% ±50 ppm/°C × 65°C C-grade: ±0.825% = ±0.5% ±50 ppm/°C × 65°CTherefore, as an example, the A-grade LM4050-N-2.5 has an over-temperature Reverse Breakdown Voltage tolerance of ±2.5V × 0.425% = ±11 mV.
(4) Load regulation is measured on pulse basis from no load to the specified load current. Output changes due to die temperature change must be taken into account separately.
(5) Thermal hysteresis is defined as the difference in voltage measured at +25°C after cycling to temperature -40°C and the 25°C measurement after cycling to temperature +125°C.

Copyright © 2000–2013, Texas Instruments Incorporated

LM4050-N-2.5 Electrical Characteristics

Boldface limits apply for $T_A = T_J = T_{MIN}$ to T_{MAX}; all other limits $T_A = T_J = 25°C$. The grades A, B and C designate initial Reverse Breakdown Voltage tolerances of ±0.1%, ±0.2%, and 0.5% respectively.

Symbol	Parameter	Conditions	Typical(1)	LM4050-NAIM3 LM4050-NAEM3 Limits(2)	LM4050-NBIM3 LM4050-NBEM3 Limits(2)	LM4050-NCIM3 LM4050-NCEM3 Limits(2)	Units (Limit)
V_R	Reverse Breakdown Voltage	I_R = 100 µA	2.500				V
	Reverse Breakdown Voltage Tolerance(3)	I_R = 100 µA		±2.5	±5.0	±13	mV (max)
		Industrial Temp. Range		**±11**	**±14**	**±21**	mV (max)
		Extended Temp. Range		**±15**	**±18**	**±25**	mV (max)
I_{RMIN}	Minimum Operating Current		41				µA
				60	60	60	µA (max)
				65	**65**	**65**	µA (max)
$\Delta V_R/\Delta T$	Average Reverse Breakdown Voltage Temperature Coefficient(3)	I_R = 10 mA	±20				ppm/°C
		I_R = 1 mA	±15				ppm/°C
		I_R = 100 µA	±15	**±50**	**±50**	**±50**	ppm/°C (max)
$\Delta V_R/\Delta I_R$	Reverse Breakdown Voltage Change with Operating Current Change(4)	$I_{RMIN} \le I_R \le 1$ mA	0.3				mV
				0.8	0.8	0.8	mV (max)
				1.2	**1.2**	**1.2**	mV (max)
		1 mA ≤ I_R ≤ 15 mA	2.3				mV
				6.0	6.0	6.0	mV (max)
				8.0	**8.0**	**8.0**	mV (max)
Z_R	Reverse Dynamic Impedance	I_R = 1 mA, f = 120 Hz, I_{AC} = 0.1 I_R	0.3				Ω
e_N	Wideband Noise	I_R = 100 µA 10 Hz ≤ f ≤ 10 kHz	41				μV_{rms}
ΔV_R	Reverse Breakdown Voltage Long Term Stability	t = 1000 hrs T = 25°C ±0.1°C I_R = 100 µA	120				ppm
V_{HYST}	Thermal Hysteresis (5)	ΔT = −40°C to 125°C	0.7				mV

(1) Typicals are at T_J = 25°C and represent most likely parametric norm.

(2) Limits are 100% production tested at 25°C. Limits over temperature are guaranteed through correlation using Statistical Quality Control (SQC) methods. The limits are used to calculate National's AOQL.

(3) The boldface (over-temperature) limit for Reverse Breakdown Voltage Tolerance is defined as the room temperature Reverse Breakdown Voltage Tolerance ±[($\Delta V_R/\Delta T$)(maxΔT)(V_R)]. Where, $\Delta V_R/\Delta T$ is the V_R temperature coefficient, maxΔT is the maximum difference in temperature from the reference point of 25°C to T_{MIN} or T_{MAX}, and V_R is the reverse breakdown voltage. The total over-temperature tolerance for the different grades in the industrial temperature range where maxΔT = 65°C is shown below: A-grade: ±0.425% = ±0.1% ±50 ppm/°C × 65°C B-grade: ±0.525% = ±0.2% ±50 ppm/°C × 65°C C-grade: ±0.825% = ±0.5% ±50 ppm/°C × 65°CTherefore, as an example, the A-grade LM4050-N-2.5 has an over-temperature Reverse Breakdown Voltage tolerance of ±2.5V × 0.425% = ±11 mV.

(4) Load regulation is measured on pulse basis from no load to the specified load current. Output changes due to die temperature change must be taken into account separately.

(5) Thermal hysteresis is defined as the difference in voltage measured at +25°C after cycling to temperature -40°C and the 25°C measurement after cycling to temperature +125°C.

Copyright © 2000–2013, Texas Instruments Incorporated

LM4050-N-4.1
Electrical Characteristics

Boldface limits apply for $T_A = T_J = T_{MIN}$ to T_{MAX}; all other limits $T_A = T_J = 25°C$. The grades A, B and C designate initial Reverse Breakdown Voltage tolerances of ±0.1%, ±0.2%, and 0.5% respectively.

Symbol	Parameter	Conditions	Typical[1]	LM4050-NAIM3 LM4050-NAEM3 Limits[2]	LM4050-NBIM3 LM4050-NBEM3 Limits[2]	LM4050-NCIM3 LM4050-NCEM3 Limits[2]	Units (Limit)
V_R	Reverse Breakdown Voltage	I_R = 100 µA	4.096				V
	Reverse Breakdown Voltage Tolerance[3]	I_R = 100 µA		±4.1	±8.2	±21	mV (max)
		Industrial Temp. Range		**±18**	**±22**	**±34**	mV (max)
		Extended Temp. Range		**±25**	**±29**	**±41**	mV (max)
I_{RMIN}	Minimum Operating Current		52				µA
				68	68	68	µA (max)
		Industrial Temp. Range		**73**	**73**	**73**	µA (max)
		Extended Temp. Range		**78**	**78**	**78**	µA (max)
$\Delta V_R/\Delta T$	Average Reverse Breakdown Voltage Temperature Coefficient[3]	I_R = 10 mA	±30				ppm/°C
		I_R = 1 mA	±20				ppm/°C
		I_R = 100 µA	±20	**±50**	**±50**	**±50**	ppm/°C (max)
$\Delta V_R/\Delta I_R$	Reverse Breakdown Voltage Change with Operating Current Change[4]	$I_{RMIN} \le I_R \le 1$ mA	0.2				mV
				0.9	0.9	0.9	mV (max)
				1.2	**1.2**	**1.2**	mV (max)
		1 mA ≤ I_R ≤ 15 mA	2.0				mV
				7.0	7.0	7.0	mV (max)
				10.0	**10.0**	**10.0**	mV (max)
Z_R	Reverse Dynamic Impedance	I_R = 1 mA, f = 120 Hz, I_{AC} = 0.1 I_R	0.5				Ω
e_N	Wideband Noise	I_R = 100 µA 10 Hz ≤ f ≤ 10 kHz	93				μV_{rms}
ΔV_R	Reverse Breakdown Voltage Long Term Stability	t = 1000 hrs T = 25°C ±0.1°C I_R = 100 µA	120				ppm
V_{HYST}	Thermal Hysteresis[5]	ΔT = −40°C to 125°C	1.148				mV

(1) Typicals are at T_J = 25°C and represent most likely parametric norm.
(2) Limits are 100% production tested at 25°C. Limits over temperature are guaranteed through correlation using Statistical Quality Control (SQC) methods. The limits are used to calculate National's AOQL.
(3) The boldface (over-temperature) limit for Reverse Breakdown Voltage Tolerance is defined as the room temperature Reverse Breakdown Voltage Tolerance ±[($\Delta V_R/\Delta T$)(maxΔT)(V_R)]. Where, $\Delta V_R/\Delta T$ is the V_R temperature coefficient, maxΔT is the maximum difference in temperature from the reference point of 25°C to T_{MIN} or T_{MAX}, and V_R is the reverse breakdown voltage. The total over-temperature tolerance for the different grades in the industrial temperature range where maxΔT = 65°C is shown below: A-grade: ±0.425% = ±0.1% ±50 ppm/°C × 65°C B-grade: ±0.525% = ±0.2% ±50 ppm/°C × 65°C C-grade: ±0.825% = ±0.5% ±50 ppm/°C × 65°CTherefore, as an example, the A-grade LM4050-N-2.5 has an over-temperature Reverse Breakdown Voltage tolerance of ±2.5V × 0.425% = ±11 mV.
(4) Load regulation is measured on pulse basis from no load to the specified load current. Output changes due to die temperature change must be taken into account separately.
(5) Thermal hysteresis is defined as the difference in voltage measured at +25°C after cycling to temperature -40°C and the 25°C measurement after cycling to temperature +125°C.

Copyright © 2000–2013, Texas Instruments Incorporated

LM4050-N-5.0 Electrical Characteristics

Boldface limits apply for $T_A = T_J = T_{MIN}$ to T_{MAX}; all other limits $T_A = T_J = 25°C$. The grades A, B and C designate initial Reverse Breakdown Voltage tolerances of ±0.1%, ±0.2% and 0.5% respectively.

Symbol	Parameter	Conditions	Typical(1)	LM4050-NAIM3 LM4050-NAEM3 Limits(2)	LM4050-NBIM3 LM4050-NBEM3 Limits(2)	LM4050-NCIM3 LM4050-NCEM3 Limits(2)	Units (Limit)
V_R	Reverse Breakdown Voltage	I_R = 100 µA	5.000				V
	Reverse Breakdown Voltage Tolerance(3)	I_R = 100 µA		±5.0	±10	±25	mV (max)
		Industrial Temp. Range		**±22**	**±27**	**±42**	mV (max)
		Extended Temp. Range		**±30**	**±35**	**±50**	mV (max)
I_{RMIN}	Minimum Operating Current		56				µA
				74	74	74	µA (max)
		Industrial Temp. Range		**80**	**80**	**80**	µA (max)
		Extended Temp. Range		**90**	**90**	**90**	µA (max)
$\Delta V_R/\Delta T$	Average Reverse Breakdown Voltage Temperature Coefficient(3)	I_R = 10 mA	±30				ppm/°C
		I_R = 1 mA	±20				ppm/°C
		I_R = 100 µA	±20	**±50**	**±50**	**±50**	ppm/°C (max)
$\Delta V_R/\Delta I_R$	Reverse Breakdown Voltage Change with Operating Current Change(4)	$I_{RMIN} \le I_R \le$ 1 mA	0.2				mV
				1.0	1.0	1.0	mV (max)
				1.4	**1.4**	**1.4**	mV (max)
		1 mA ≤ $I_R \le$ 15 mA	2.0				mV
				8.0	8.0	8.0	mV (max)
				12.0	**12.0**	**12.0**	mV (max)
Z_R	Reverse Dynamic Impedance	I_R = 1 mA, f = 120 Hz,	0.5				Ω
		$I_{AC} = 0.1\ I_R$					Ω (max)
e_N	Wideband Noise	I_R = 100 µA 10 Hz ≤ f ≤ 10 kHz	93				μV_{rms}
ΔV_R	Reverse Breakdown Voltage Long Term Stability	t = 1000 hrs T = 25°C ±0.1°C I_R = 100 µA	120				ppm
V_{HYST}	Thermal Hysteresis(5)	ΔT = −40°C to 125°C	1.4				mV

(1) Typicals are at T_J = 25°C and represent most likely parametric norm.

(2) Limits are 100% production tested at 25°C. Limits over temperature are guaranteed through correlation using Statistical Quality Control (SQC) methods. The limits are used to calculate National's AOQL.

(3) The boldface (over-temperature) limit for Reverse Breakdown Voltage Tolerance is defined as the room temperature Reverse Breakdown Voltage Tolerance ±[($\Delta V_R/\Delta T$)(maxΔT)(V_R)]. Where, $\Delta V_R/\Delta T$ is the V_R temperature coefficient, maxΔT is the maximum difference in temperature from the reference point of 25°C to T_{MIN} or T_{MAX}, and V_R is the reverse breakdown voltage. The total over-temperature tolerance for the different grades in the industrial temperature range where maxΔT = 65°C is shown below: A-grade: ±0.425% = ±0.1% ±50 ppm/°C × 65°C B-grade: ±0.525% = ±0.2% ±50 ppm/°C × 65°C C-grade: ±0.825% = ±0.5% ±50 ppm/°C × 65°CTherefore, as an example, the A-grade LM4050-N-2.5 has an over-temperature Reverse Breakdown Voltage tolerance of ±2.5V × 0.425% = ±11 mV.

(4) Load regulation is measured on pulse basis from no load to the specified load current. Output changes due to die temperature change must be taken into account separately.

(5) Thermal hysteresis is defined as the difference in voltage measured at +25°C after cycling to temperature -40°C and the 25°C measurement after cycling to temperature +125°C.

Copyright © 2000–2013, Texas Instruments Incorporated

LM4050-N-8.2
Electrical Characteristics

Boldface limits apply for $T_A = T_J = T_{MIN}$ to T_{MAX}; all other limits $T_A = T_J = 25°C$. The grades A, B and C designate initial Reverse Breakdown Voltage tolerances of ±0.1% and ±0.2% and 0.5% respectively.

Symbol	Parameter	Conditions	Typical(1)	LM4050-NAIM3 LM4050-NAEM3 Limits(2)	LM4050-NBIM3 LM4050-NBEM3 Limits(2)	LM4050-NCIM3 LM4050-NCEM3 Limits(2)	Units (Limit)
V_R	Reverse Breakdown Voltage	I_R = 150 µA	8.192				V
	Reverse Breakdown Voltage Tolerance (3)	I_R = 150 µA		±8.2	±16	±41	mV (max)
		Industrial Temp. Range		**±35**	**±43**	**±68**	mV (max)
		Extended Temp. Range		**±49**	**±57**	**±82**	mV (max)
I_{RMIN}	Minimum Operating Current		74				µA
				91	91	91	µA (max)
		Industrial Temp. Range		**95**	**95**	**95**	µA (max)
		Extended Temp. Range		**100**	**100**	**100**	µA (max)
$\Delta V_R/\Delta T$	Average Reverse Breakdown Voltage Temperature Coefficient (3)	I_R = 10 mA	±40				ppm/°C
		I_R = 1 mA	±20				ppm/°C
		I_R = 150 µA	±20	**±50**	**±50**	**±50**	ppm/°C (max)
$\Delta V_R/\Delta I_R$	Reverse Breakdown Voltage Change with Operating Current Change (4)	$I_{RMIN} \le I_R \le 1$ mA	0.6				mV
				1.3	1.3	1.3	mV (max)
				2.5	**2.5**	**2.5**	mV (max)
		1 mA ≤ I_R ≤ 15 mA	7.0				mV
				10.0	10.0	10.0	mV (max)
				18.0	**18.0**	**18.0**	mV (max)
Z_R	Reverse Dynamic Impedance	I_R = 1 mA, f = 120 Hz, I_{AC} = 0.1 I_R	0.6				Ω
e_N	Wideband Noise	I_R = 150 µA 10 Hz ≤ f ≤ 10 kHz	150				μV_{rms}
ΔV_R	Reverse Breakdown Voltage Long Term Stability	t = 1000 hrs T = 25°C ±0.1°C I_R = 150 µA	120				ppm
V_{HYST}	Thermal Hysteresis (5)	ΔT = −40°C to 125°C	2.3				mV

(1) Typicals are at T_J = 25°C and represent most likely parametric norm.
(2) Limits are 100% production tested at 25°C. Limits over temperature are guaranteed through correlation using Statistical Quality Control (SQC) methods. The limits are used to calculate National's AOQL.
(3) The boldface (over-temperature) limit for Reverse Breakdown Voltage Tolerance is defined as the room temperature Reverse Breakdown Voltage Tolerance ±[($\Delta V_R/\Delta T$)(maxΔT)(V_R)]. Where, $\Delta V_R/\Delta T$ is the V_R temperature coefficient, maxΔT is the maximum difference in temperature from the reference point of 25°C to T_{MIN} or T_{MAX}, and V_R is the reverse breakdown voltage. The total over-temperature tolerance for the different grades in the industrial temperature range where maxΔT = 65°C is shown below: A-grade: ±0.425% = ±0.1% ±50 ppm/°C × 65°C B-grade: ±0.525% = ±0.2% ±50 ppm/°C × 65°C C-grade: ±0.825% = ±0.5% ±50 ppm/°C × 65°CTherefore, as an example, the A-grade LM4050-N-2.5 has an over-temperature Reverse Breakdown Voltage tolerance of ±2.5V × 0.425% = ±11 mV.
(4) Load regulation is measured on pulse basis from no load to the specified load current. Output changes due to die temperature change must be taken into account separately.
(5) Thermal hysteresis is defined as the difference in voltage measured at +25°C after cycling to temperature -40°C and the 25°C measurement after cycling to temperature +125°C.

Copyright © 2000–2013, Texas Instruments Incorporated

LM4050-N-10.0 Electrical Characteristics

Boldface limits apply for $T_A = T_J = T_{MIN}$ to T_{MAX}; all other limits $T_A = T_J = 25°C$. The grades A, B and C designate initial Reverse Breakdown Voltage tolerances of ±0.1% and ±0.2% and 0.5% respectively.

Symbol	Parameter	Conditions	Typical (1)	LM4050-NAIM3 LM4050-NAEM3 Limits (2)	LM4050-NBIM3 LM4050-NBEM3 Limits (2)	LM4050-NCIM3 LM4050-NCEM3 Limits (2)	Units (Limit)
V_R	Reverse Breakdown Voltage	I_R = 150 µA	10.00				V
	Reverse Breakdown Voltage Tolerance (3)	I_R = 150 µA		±10	±20	±50	mV (max)
		Industrial Temp. Range		**±43**	**±53**	**±83**	mV (max)
		Extended Temp. Range		**±60**	**±70**	**±100**	mV (max)
I_{RMIN}	Minimum Operating Current		80				µA
				100	100	100	µA (max)
		Industrial Temp. Range		**103**	**103**	**103**	µA (max)
		Extended Temp. Range		**110**	**110**	**110**	µA (max)
$\Delta V_R/\Delta T$	Average Reverse Breakdown Voltage Temperature Coefficient (3)	I_R = 10 mA	±40				ppm/°C
		I_R = 1 mA	±20				ppm/°C
		I_R = 150 µA	±20	**±50**	**±50**	**±50**	ppm/°C (max)
$\Delta V_R/\Delta I_R$	Reverse Breakdown Voltage Change with Operating Current Change (4)	$I_{RMIN} \le I_R \le 1$ mA	0.8				mV
				1.5	1.5	1.5	mV (max)
				3.5	**3.5**	**3.5**	mV (max)
		1 mA ≤ I_R ≤ 15 mA	8.0				mV
				12.0	12.0	12.0	mV (max)
				23.0	**23.0**	**23.0**	mV (max)
Z_R	Reverse Dynamic Impedance	I_R = 1 mA, f = 120 Hz, I_{AC} = 0.1 I_R	0.7				Ω
e_N	Wideband Noise	I_R = 150 µA 10 Hz ≤ f ≤ 10 kHz	150				μV_{rms}
ΔV_R	Reverse Breakdown Voltage Long Term Stability	t = 1000 hrs T = 25°C ±0.1°C I_R = 150 µA	120				ppm
V_{HYST}	Thermal Hysteresis (5)	ΔT = −40°C to 125°C	2.8				mV

(1) Typicals are at T_J = 25°C and represent most likely parametric norm.

(2) Limits are 100% production tested at 25°C. Limits over temperature are guaranteed through correlation using Statistical Quality Control (SQC) methods. The limits are used to calculate National's AOQL.

(3) The boldface (over-temperature) limit for Reverse Breakdown Voltage Tolerance is defined as the room temperature Reverse Breakdown Voltage Tolerance ±[($\Delta V_R/\Delta T$)(maxΔT)(V_R)]. Where, $\Delta V_R/\Delta T$ is the V_R temperature coefficient, maxΔT is the maximum difference in temperature from the reference point of 25°C to T_{MIN} or T_{MAX}, and V_R is the reverse breakdown voltage. The total over-temperature tolerance for the different grades in the industrial temperature range where maxΔT = 65°C is shown below: A-grade: ±0.425% = ±0.1% ±50 ppm/°C × 65°C B-grade: ±0.525% = ±0.2% ±50 ppm/°C × 65°C C-grade: ±0.825% = ±0.5% ±50 ppm/°C × 65°CTherefore, as an example, the A-grade LM4050-N-2.5 has an over-temperature Reverse Breakdown Voltage tolerance of ±2.5V × 0.425% = ±11 mV.

(4) Load regulation is measured on pulse basis from no load to the specified load current. Output changes due to die temperature change must be taken into account separately.

(5) Thermal hysteresis is defined as the difference in voltage measured at +25°C after cycling to temperature -40°C and the 25°C measurement after cycling to temperature +125°C.

Copyright © 2000–2013, Texas Instruments Incorporated

Typical Performance Characteristics

Output Impedance vs Frequency

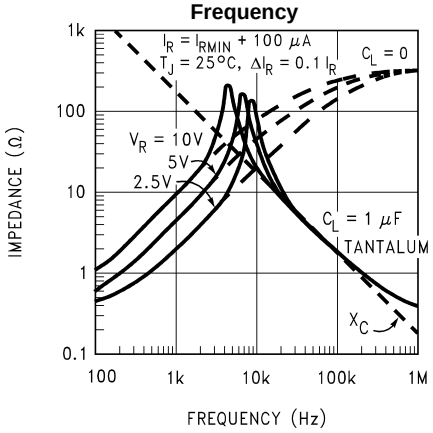

Figure 2.

Output Impedance vs Frequency

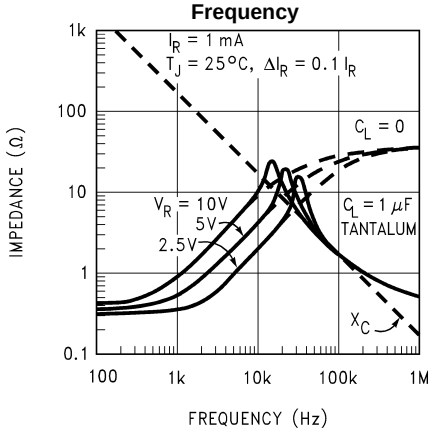

Figure 3.

Reverse Characteristics and Minimum Operating Current

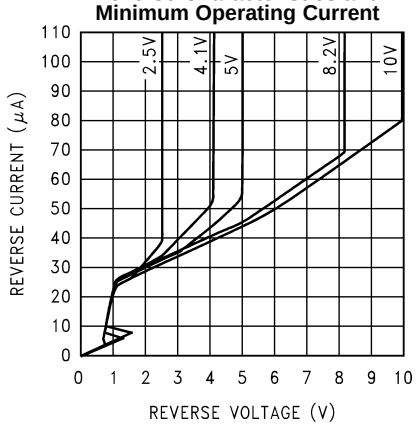

Figure 4.

Noise Voltage vs Frequency

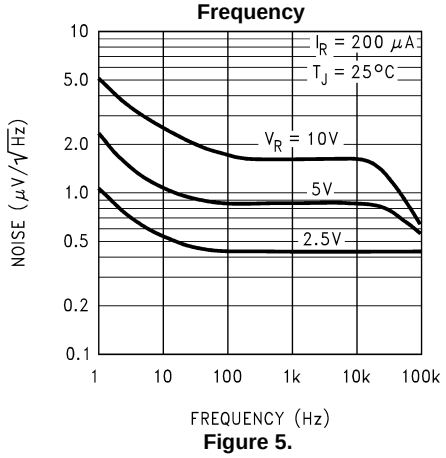

Figure 5.

Thermal Hysteresis

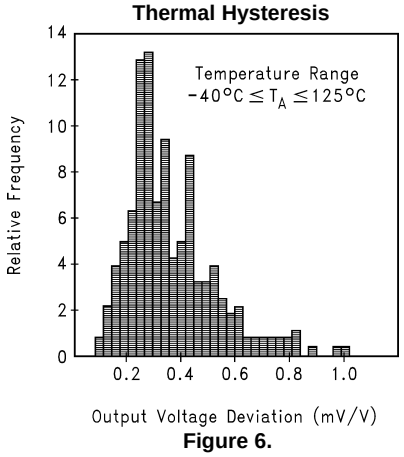

Figure 6.

Copyright © 2000–2013, Texas Instruments Incorporated

Start-Up Characteristics

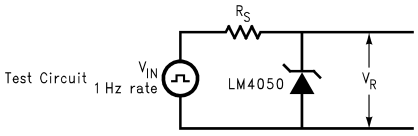

Figure 7. Test Circuit

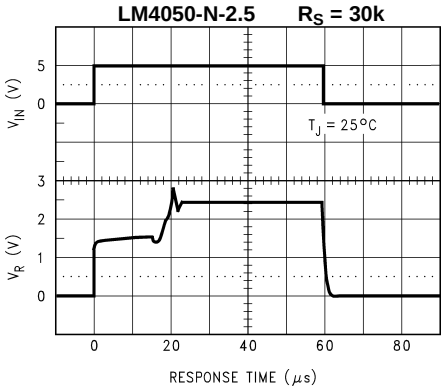

Figure 8.

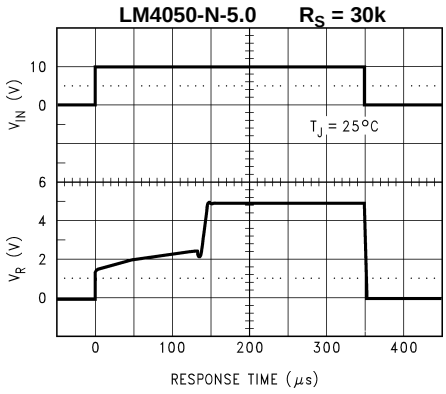

Figure 9.

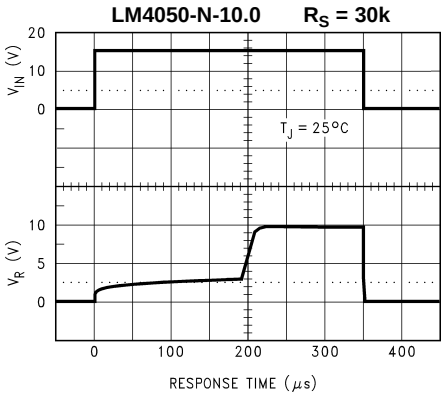

Figure 10.

Functional Block Diagram

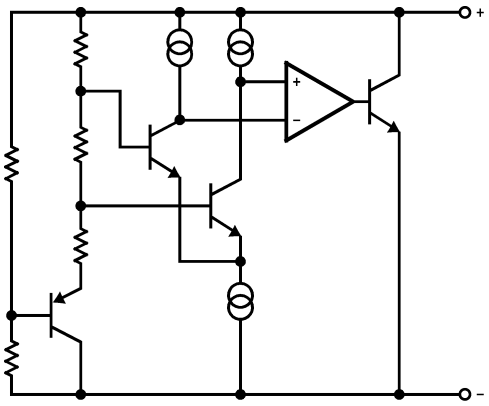

Figure 11. Functional Block Diagram

Copyright © 2000–2013, Texas Instruments Incorporated

APPLICATIONS INFORMATION

The LM4050-N is a precision micro-power curvature-corrected bandgap shunt voltage reference. For space critical applications, the LM4050-N is available in the sub-miniature SOT-23 surface-mount package. The LM4050-N has been designed for stable operation without the need of an external capacitor connected between the "+" pin and the "−" pin. If, however, a bypass capacitor is used, the LM4050-N remains stable. Reducing design effort is the availability of several fixed reverse breakdown voltages: 2.048V, 2.500V, 4.096V, 5.000V, 8.192V, and 10.000V. The minimum operating current increases from 60 µA for the LM4050-N-2.0 to 100 µA for the LM4050-N-10.0. All versions have a maximum operating current of 15 mA.

LM4050-Ns in the SOT-23 packages have a parasitic Schottky diode between pin 2 (−) and pin 3 (Die attach interface contact). Therefore, pin 3 of the SOT-23 package must be left floating or connected to pin 2.

The 4.096V version allows single +5V 12-bit ADCs or DACs to operate with an LSB equal to 1 mV. For 12-bit ADCs or DACs that operate on supplies of 10V or greater, the 8.192V version gives 2 mV per LSB.

The typical thermal hysteresis specification is defined as the change in +25°C voltage measured after thermal cycling. The device is thermal cycled to temperature -40°C and then measured at 25°C. Next the device is thermal cycled to temperature +125°C and again measured at 25°C. The resulting V_{OUT} delta shift between the 25°C measurements is thermal hysteresis. Thermal hysteresis is common in precision references and is induced by thermal-mechanical package stress. Changes in environmental storage temperature, operating temperature and board mounting temperature are all factors that can contribute to thermal hysteresis.

In a conventional shunt regulator application (Figure 12) , an external series resistor (R_S) is connected between the supply voltage and the LM4050-N. R_S determines the current that flows through the load (I_L) and the LM4050-N (I_Q). Since load current and supply voltage may vary, R_S should be small enough to supply at least the maximum guaranteed I_{RMIN} (spec. table) to the LM4050-N even when the supply voltage is at its minimum and the load current is at its maximum value. When the supply voltage is at its maximum and I_L is at its minimum, R_S should be large enough so that the current flowing through the LM4050-N is less than 15 mA.

R_S is determined by the supply voltage, (V_S), the load and operating current, (I_L and I_Q), and the LM4050-N's reverse breakdown voltage, V_R.

$$R_S = \frac{V_S - V_R}{I_L + I_Q} \tag{1}$$

Typical Applications

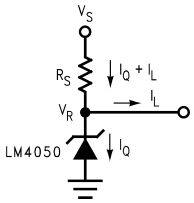

Figure 12. Shunt Regulator

Copyright © 2000–2013, Texas Instruments Incorporated

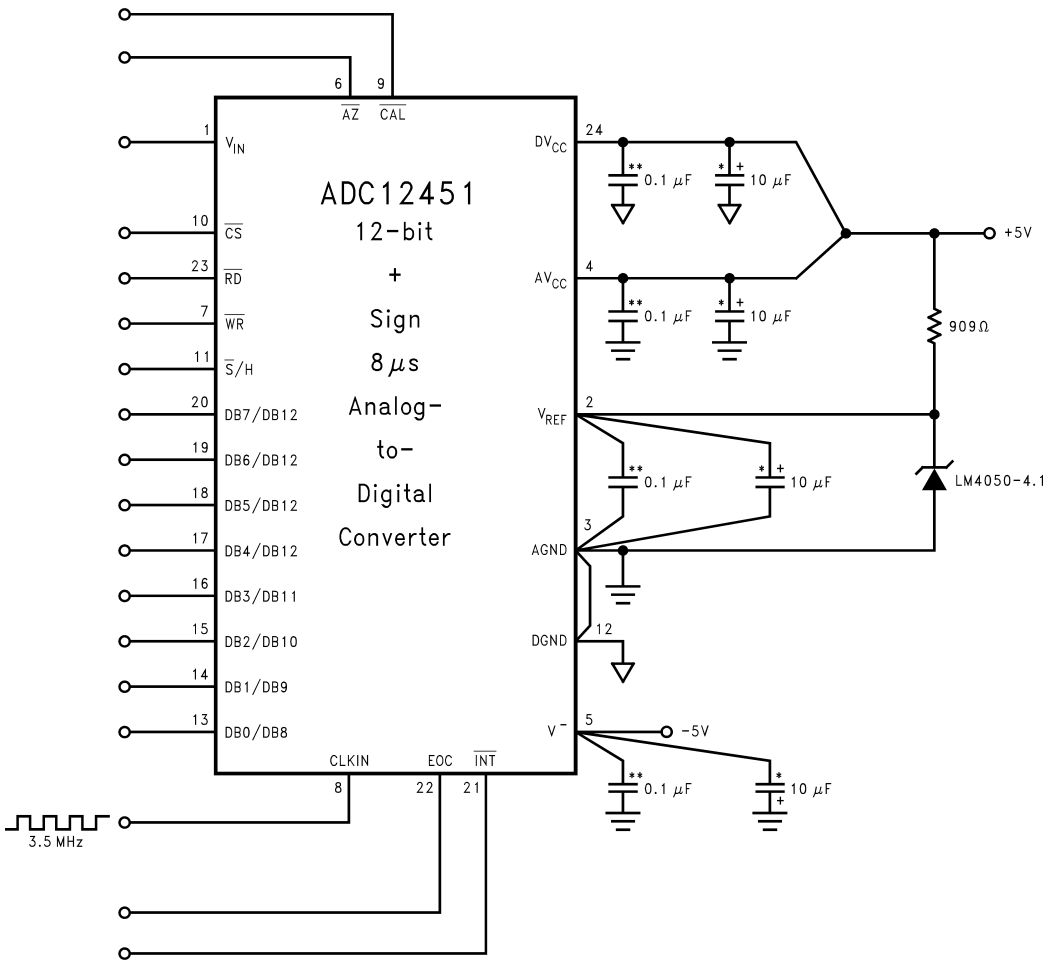

**Ceramic monolithic
*Tantalum

Figure 13. LM4050-N-4.1's Nominal 4.096 breakdown voltage gives ADC12451 1 mV/LSB

Copyright © 2000–2013, Texas Instruments Incorporated

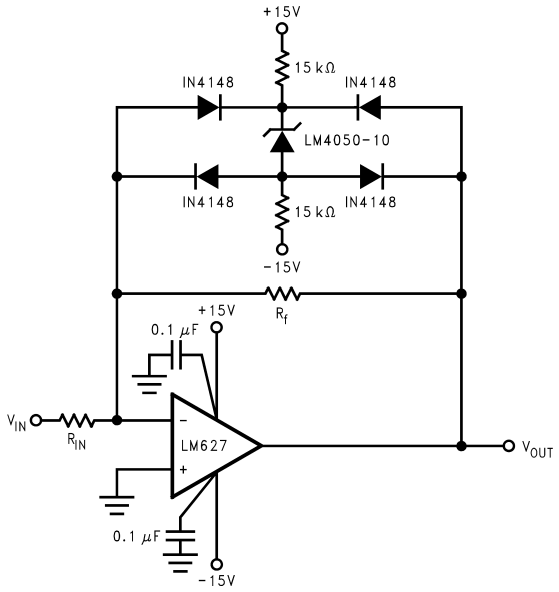

A. Bounded amplifier reduces saturation-induced delays and can prevent succeeding stage damage. Nominal clamping voltage is ±11.5V (LM4050-N's reverse breakdown voltage +2 diode V_F).

Figure 14. Bounded Amplifier

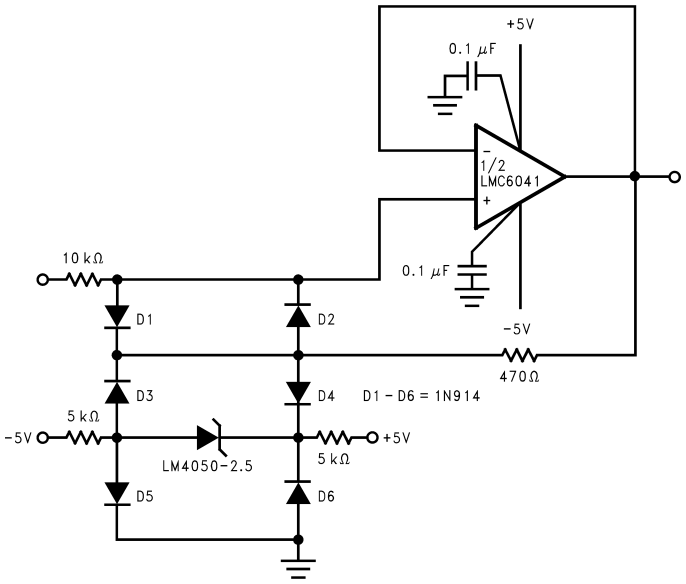

A. The bounding voltage is ±4V with the LM4050-N-2.5 (LM4050-N's reverse breakdown voltage + 3 diode V_F).

Figure 15. Protecting Op Amp Input

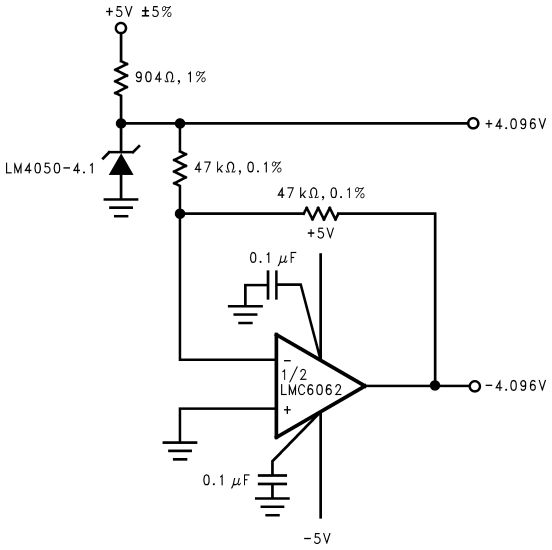

Figure 16. Precision ±4.096V Reference

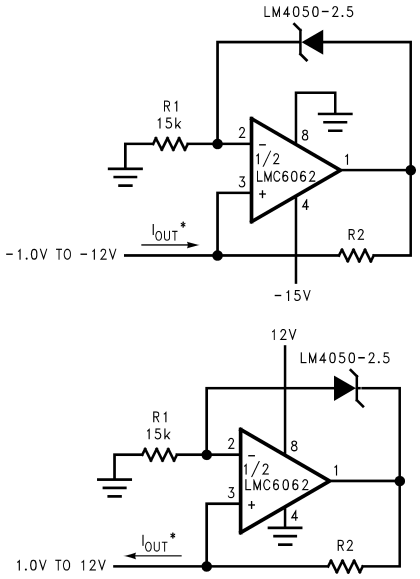

$$*I_{OUT} - \frac{2.5V}{R2}$$

Figure 17. Precision 1 µA to 1 mA Current Sources

Copyright © 2000–2013, Texas Instruments Incorporated

REVISION HISTORY

Changes from Revision D (April 2013) to Revision E	Page
• Changed layout of National Data Sheet to TI format	14

Copyright © 2000–2013, Texas Instruments Incorporated

PACKAGING INFORMATION

Orderable Device	Status (1)	Package Type	Package Drawing	Pins	Package Qty	Eco Plan (2)	Lead/Ball Finish (6)	MSL Peak Temp (3)	Op Temp (°C)	Device Marking (4/5)	Samples
LM4050AEM3-10	ACTIVE	SOT-23	DBZ	3		TBD	Call TI	Call TI		RGA	Samples
LM4050AEM3-10/NOPB	ACTIVE	SOT-23	DBZ	3	1000	Green (RoHS & no Sb/Br)	CU SN	Level-1-260C-UNLIM		RGA	Samples
LM4050AEM3-2.0	NRND	SOT-23	DBZ	3	1000	TBD	Call TI	Call TI		RNA	
LM4050AEM3-2.0/NOPB	ACTIVE	SOT-23	DBZ	3	1000	Green (RoHS & no Sb/Br)	CU SN	Level-1-260C-UNLIM		RNA	Samples
LM4050AEM3-2.5	NRND	SOT-23	DBZ	3	1000	TBD	Call TI	Call TI		RCA	
LM4050AEM3-2.5/NOPB	ACTIVE	SOT-23	DBZ	3	1000	Green (RoHS & no Sb/Br)	CU SN	Level-1-260C-UNLIM		RCA	Samples
LM4050AEM3-5.0	NRND	SOT-23	DBZ	3	1000	TBD	Call TI	Call TI		REA	
LM4050AEM3-5.0/NOPB	ACTIVE	SOT-23	DBZ	3	1000	Green (RoHS & no Sb/Br)	CU SN	Level-1-260C-UNLIM		REA	Samples
LM4050AEM3-8.2	NRND	SOT-23	DBZ	3	1000	TBD	Call TI	Call TI		RFA	
LM4050AEM3-8.2/NOPB	ACTIVE	SOT-23	DBZ	3	1000	Green (RoHS & no Sb/Br)	CU SN	Level-1-260C-UNLIM		RFA	Samples
LM4050AEM3X-10	NRND	SOT-23	DBZ	3	3000	TBD	Call TI	Call TI		RGA	
LM4050AEM3X-10/NOPB	ACTIVE	SOT-23	DBZ	3	3000	Green (RoHS & no Sb/Br)	CU SN	Level-1-260C-UNLIM		RGA	Samples
LM4050AEM3X-2.5/NOPB	ACTIVE	SOT-23	DBZ	3	3000	Green (RoHS & no Sb/Br)	CU SN	Level-1-260C-UNLIM		RCA	Samples
LM4050AEM3X-5.0/NOPB	ACTIVE	SOT-23	DBZ	3	3000	Green (RoHS & no Sb/Br)	CU SN	Level-1-260C-UNLIM		REA	Samples
LM4050AIM3-10	NRND	SOT-23	DBZ	3	1000	TBD	Call TI	Call TI	-40 to 85	RGA	
LM4050AIM3-10/NOPB	ACTIVE	SOT-23	DBZ	3	1000	Green (RoHS & no Sb/Br)	CU SN	Level-1-260C-UNLIM	-40 to 85	RGA	Samples
LM4050AIM3-2.5	NRND	SOT-23	DBZ	3	1000	TBD	Call TI	Call TI	-40 to 85	RCA	
LM4050AIM3-2.5/NOPB	ACTIVE	SOT-23	DBZ	3	1000	Green (RoHS & no Sb/Br)	CU SN	Level-1-260C-UNLIM	-40 to 85	RCA	Samples
LM4050AIM3-4.1	NRND	SOT-23	DBZ	3	1000	TBD	Call TI	Call TI	-40 to 85	RDA	
LM4050AIM3-4.1/NOPB	ACTIVE	SOT-23	DBZ	3	1000	Green (RoHS & no Sb/Br)	CU SN	Level-1-260C-UNLIM	-40 to 85	RDA	Samples
LM4050AIM3-5.0	NRND	SOT-23	DBZ	3	1000	TBD	Call TI	Call TI	-40 to 85	REA	

Orderable Device	Status (1)	Package Type	Package Drawing	Pins	Package Qty	Eco Plan (2)	Lead/Ball Finish (6)	MSL Peak Temp (3)	Op Temp (°C)	Device Marking (4/5)	Samples
LM4050AIM3-5.0/NOPB	ACTIVE	SOT-23	DBZ	3	1000	Green (RoHS & no Sb/Br)	CU SN	Level-1-260C-UNLIM	-40 to 85	REA	Samples
LM4050AIM3X-2.5	NRND	SOT-23	DBZ	3	3000	TBD	Call TI	Call TI	-40 to 85	RCA	
LM4050AIM3X-2.5/NOPB	ACTIVE	SOT-23	DBZ	3	3000	Green (RoHS & no Sb/Br)	CU SN	Level-1-260C-UNLIM	-40 to 85	RCA	Samples
LM4050AIM3X-4.1/NOPB	ACTIVE	SOT-23	DBZ	3	3000	Green (RoHS & no Sb/Br)	CU SN	Level-1-260C-UNLIM	-40 to 85	RDA	Samples
LM4050AIM3X-5.0	NRND	SOT-23	DBZ	3	3000	TBD	Call TI	Call TI	-40 to 85	REA	
LM4050AIM3X-5.0/NOPB	ACTIVE	SOT-23	DBZ	3	3000	Green (RoHS & no Sb/Br)	CU SN	Level-1-260C-UNLIM	-40 to 85	REA	Samples
LM4050BEM3-10/NOPB	ACTIVE	SOT-23	DBZ	3	1000	Green (RoHS & no Sb/Br)	CU SN	Level-1-260C-UNLIM		RGB	Samples
LM4050BEM3-2.5	NRND	SOT-23	DBZ	3	1000	TBD	Call TI	Call TI		RCB	
LM4050BEM3-2.5/NOPB	ACTIVE	SOT-23	DBZ	3	1000	Green (RoHS & no Sb/Br)	CU SN	Level-1-260C-UNLIM		RCB	Samples
LM4050BEM3-4.1/NOPB	ACTIVE	SOT-23	DBZ	3	1000	Green (RoHS & no Sb/Br)	CU SN	Level-1-260C-UNLIM		RDB	Samples
LM4050BEM3-5.0	NRND	SOT-23	DBZ	3	1000	TBD	Call TI	Call TI		REB	
LM4050BEM3-5.0/NOPB	ACTIVE	SOT-23	DBZ	3	1000	Green (RoHS & no Sb/Br)	CU SN	Level-1-260C-UNLIM		REB	Samples
LM4050BEM3-8.2/NOPB	ACTIVE	SOT-23	DBZ	3	1000	Green (RoHS & no Sb/Br)	CU SN	Level-1-260C-UNLIM		RFB	Samples
LM4050BEM3X-10/NOPB	ACTIVE	SOT-23	DBZ	3	3000	Green (RoHS & no Sb/Br)	CU SN	Level-1-260C-UNLIM		RGB	Samples
LM4050BEM3X-2.5/NOPB	ACTIVE	SOT-23	DBZ	3	3000	Green (RoHS & no Sb/Br)	CU SN	Level-1-260C-UNLIM		RCB	Samples
LM4050BEM3X-5.0/NOPB	ACTIVE	SOT-23	DBZ	3	3000	Green (RoHS & no Sb/Br)	CU SN	Level-1-260C-UNLIM		REB	Samples
LM4050BIM3-10/NOPB	ACTIVE	SOT-23	DBZ	3	1000	Green (RoHS & no Sb/Br)	CU SN	Level-1-260C-UNLIM	-40 to 85	RGB	Samples
LM4050BIM3-2.5	NRND	SOT-23	DBZ	3	1000	TBD	Call TI	Call TI	-40 to 85	RCB	
LM4050BIM3-2.5/NOPB	ACTIVE	SOT-23	DBZ	3	1000	Green (RoHS & no Sb/Br)	CU SN	Level-1-260C-UNLIM	-40 to 85	RCB	Samples
LM4050BIM3-4.1/NOPB	ACTIVE	SOT-23	DBZ	3	1000	Green (RoHS & no Sb/Br)	CU SN	Level-1-260C-UNLIM	-40 to 85	RDB	Samples

Orderable Device	Status (1)	Package Type	Package Drawing	Pins	Package Qty	Eco Plan (2)	Lead/Ball Finish (6)	MSL Peak Temp (3)	Op Temp (°C)	Device Marking (4/5)	Samples
LM4050BIM3-5.0	NRND	SOT-23	DBZ	3	1000	TBD	Call TI	Call TI	-40 to 85	REB	
LM4050BIM3-5.0/NOPB	ACTIVE	SOT-23	DBZ	3	1000	Green (RoHS & no Sb/Br)	CU SN	Level-1-260C-UNLIM	-40 to 85	REB	Samples
LM4050BIM3X-2.0/NOPB	ACTIVE	SOT-23	DBZ	3	3000	Green (RoHS & no Sb/Br)	CU SN	Level-1-260C-UNLIM		RNB	Samples
LM4050BIM3X-2.5/NOPB	ACTIVE	SOT-23	DBZ	3	3000	Green (RoHS & no Sb/Br)	CU SN	Level-1-260C-UNLIM	-40 to 85	RCB	Samples
LM4050BIM3X-4.1/NOPB	ACTIVE	SOT-23	DBZ	3	3000	Green (RoHS & no Sb/Br)	CU SN	Level-1-260C-UNLIM	-40 to 85	RDB	Samples
LM4050BIM3X-5.0/NOPB	ACTIVE	SOT-23	DBZ	3	3000	Green (RoHS & no Sb/Br)	CU SN	Level-1-260C-UNLIM	-40 to 85	REB	Samples
LM4050CEM3-10/NOPB	ACTIVE	SOT-23	DBZ	3	1000	Green (RoHS & no Sb/Br)	CU SN	Level-1-260C-UNLIM		RGC	Samples
LM4050CEM3-2.5	NRND	SOT-23	DBZ	3	1000	TBD	Call TI	Call TI	-40 to 125	RCC	
LM4050CEM3-2.5/NOPB	ACTIVE	SOT-23	DBZ	3	1000	Green (RoHS & no Sb/Br)	CU SN	Level-1-260C-UNLIM	-40 to 125	RCC	Samples
LM4050CEM3-5.0	NRND	SOT-23	DBZ	3	1000	TBD	Call TI	Call TI		REC	
LM4050CEM3-5.0/NOPB	ACTIVE	SOT-23	DBZ	3	1000	Green (RoHS & no Sb/Br)	CU SN	Level-1-260C-UNLIM		REC	Samples
LM4050CEM3X-2.5/NOPB	ACTIVE	SOT-23	DBZ	3	3000	Green (RoHS & no Sb/Br)	CU SN	Level-1-260C-UNLIM	-40 to 125	RCC	Samples
LM4050CEM3X-5.0/NOPB	ACTIVE	SOT-23	DBZ	3	3000	Green (RoHS & no Sb/Br)	CU SN	Level-1-260C-UNLIM		REC	Samples
LM4050CIM3-10/NOPB	ACTIVE	SOT-23	DBZ	3	1000	Green (RoHS & no Sb/Br)	CU SN	Level-1-260C-UNLIM	-40 to 85	RGC	Samples
LM4050CIM3-2.5	NRND	SOT-23	DBZ	3	1000	TBD	Call TI	Call TI	-40 to 85	RCC	
LM4050CIM3-2.5/NOPB	ACTIVE	SOT-23	DBZ	3	1000	Green (RoHS & no Sb/Br)	CU SN	Level-1-260C-UNLIM	-40 to 85	RCC	Samples
LM4050CIM3-4.1	NRND	SOT-23	DBZ	3	1000	TBD	Call TI	Call TI	-40 to 85	RDC	
LM4050CIM3-4.1/NOPB	ACTIVE	SOT-23	DBZ	3	1000	Green (RoHS & no Sb/Br)	CU SN	Level-1-260C-UNLIM	-40 to 85	RDC	Samples
LM4050CIM3-5.0	NRND	SOT-23	DBZ	3	1000	TBD	Call TI	Call TI	-40 to 85	REC	
LM4050CIM3-5.0/NOPB	ACTIVE	SOT-23	DBZ	3	1000	Green (RoHS & no Sb/Br)	CU SN	Level-1-260C-UNLIM	-40 to 85	REC	Samples

Orderable Device	Status (1)	Package Type	Package Drawing	Pins	Package Qty	Eco Plan (2)	Lead/Ball Finish (6)	MSL Peak Temp (3)	Op Temp (°C)	Device Marking (4/5)	Samples
LM4050CIM3X-2.0/NOPB	ACTIVE	SOT-23	DBZ	3	3000	Green (RoHS & no Sb/Br)	CU SN	Level-1-260C-UNLIM		RNC	Samples
LM4050CIM3X-2.5/NOPB	ACTIVE	SOT-23	DBZ	3	3000	Green (RoHS & no Sb/Br)	CU SN	Level-1-260C-UNLIM	-40 to 85	RCC	Samples
LM4050CIM3X-4.1/NOPB	ACTIVE	SOT-23	DBZ	3	3000	Green (RoHS & no Sb/Br)	CU SN	Level-1-260C-UNLIM	-40 to 85	RDC	Samples
LM4050CIM3X-5.0/NOPB	ACTIVE	SOT-23	DBZ	3	3000	Green (RoHS & no Sb/Br)	CU SN	Level-1-260C-UNLIM	-40 to 85	REC	Samples
LM4050QAEM3-10/NOPB	ACTIVE	SOT-23	DBZ	3	1000	Green (RoHS & no Sb/Br)	CU SN	Level-1-260C-UNLIM	-40 to 125	RYA	Samples
LM4050QAEM3-2.0/NOPB	ACTIVE	SOT-23	DBZ	3	1000	Green (RoHS & no Sb/Br)	CU SN	Level-1-260C-UNLIM	-40 to 125	RSA	Samples
LM4050QAEM3-2.5/NOPB	ACTIVE	SOT-23	DBZ	3	1000	Green (RoHS & no Sb/Br)	CU SN	Level-1-260C-UNLIM	-40 to 125	RTA	Samples
LM4050QAEM3-4.1/NOPB	ACTIVE	SOT-23	DBZ	3	1000	Green (RoHS & no Sb/Br)	CU SN	Level-1-260C-UNLIM	-40 to 125	RUA	Samples
LM4050QAEM3-5.0/NOPB	ACTIVE	SOT-23	DBZ	3	1000	Green (RoHS & no Sb/Br)	CU SN	Level-1-260C-UNLIM	-40 to 125	RVA	Samples
LM4050QAEM3-8.2/NOPB	ACTIVE	SOT-23	DBZ	3	1000	Green (RoHS & no Sb/Br)	CU SN	Level-1-260C-UNLIM	-40 to 125	RXA	Samples
LM4050QAEM3X10/NOPB	ACTIVE	SOT-23	DBZ	3	3000	Green (RoHS & no Sb/Br)	CU SN	Level-1-260C-UNLIM	-40 to 125	RYA	Samples
LM4050QAEM3X2.0/NOPB	ACTIVE	SOT-23	DBZ	3	3000	Green (RoHS & no Sb/Br)	CU SN	Level-1-260C-UNLIM	-40 to 125	RSA	Samples
LM4050QAEM3X2.5/NOPB	ACTIVE	SOT-23	DBZ	3	3000	Green (RoHS & no Sb/Br)	CU SN	Level-1-260C-UNLIM	-40 to 125	RTA	Samples
LM4050QAEM3X4.1/NOPB	ACTIVE	SOT-23	DBZ	3	3000	Green (RoHS & no Sb/Br)	CU SN	Level-1-260C-UNLIM	-40 to 125	RUA	Samples
LM4050QAEM3X5.0/NOPB	ACTIVE	SOT-23	DBZ	3	3000	Green (RoHS & no Sb/Br)	CU SN	Level-1-260C-UNLIM	-40 to 125	RVA	Samples
LM4050QAEM3X8.2/NOPB	ACTIVE	SOT-23	DBZ	3	3000	Green (RoHS & no Sb/Br)	CU SN	Level-1-260C-UNLIM	-40 to 125	RXA	Samples
LM4050QAIM3-10/NOPB	ACTIVE	SOT-23	DBZ	3	1000	Green (RoHS & no Sb/Br)	CU SN	Level-1-260C-UNLIM	-40 to 125	RYA	Samples
LM4050QAIM3-2.0/NOPB	ACTIVE	SOT-23	DBZ	3	1000	Green (RoHS & no Sb/Br)	CU SN	Level-1-260C-UNLIM	-40 to 125	RSA	Samples

Orderable Device	Status (1)	Package Type	Package Drawing	Pins	Package Qty	Eco Plan (2)	Lead/Ball Finish (6)	MSL Peak Temp (3)	Op Temp (°C)	Device Marking (4/5)	Samples
LM4050QAIM3-2.5/NOPB	ACTIVE	SOT-23	DBZ	3	1000	Green (RoHS & no Sb/Br)	CU SN	Level-1-260C-UNLIM	-40 to 125	RTA	Samples
LM4050QAIM3-4.1/NOPB	ACTIVE	SOT-23	DBZ	3	1000	Green (RoHS & no Sb/Br)	CU SN	Level-1-260C-UNLIM	-40 to 125	RUA	Samples
LM4050QAIM3-5.0/NOPB	ACTIVE	SOT-23	DBZ	3	1000	Green (RoHS & no Sb/Br)	CU SN	Level-1-260C-UNLIM	-40 to 125	RVA	Samples
LM4050QAIM3-8.2/NOPB	ACTIVE	SOT-23	DBZ	3	1000	Green (RoHS & no Sb/Br)	CU SN	Level-1-260C-UNLIM	-40 to 125	RXA	Samples
LM4050QAIM3X10/NOPB	ACTIVE	SOT-23	DBZ	3	3000	Green (RoHS & no Sb/Br)	CU SN	Level-1-260C-UNLIM	-40 to 125	RYA	Samples
LM4050QAIM3X2.0/NOPB	ACTIVE	SOT-23	DBZ	3	3000	Green (RoHS & no Sb/Br)	CU SN	Level-1-260C-UNLIM	-40 to 125	RSA	Samples
LM4050QAIM3X2.5/NOPB	ACTIVE	SOT-23	DBZ	3	3000	Green (RoHS & no Sb/Br)	CU SN	Level-1-260C-UNLIM	-40 to 125	RTA	Samples
LM4050QAIM3X4.1/NOPB	ACTIVE	SOT-23	DBZ	3	3000	Green (RoHS & no Sb/Br)	CU SN	Level-1-260C-UNLIM	-40 to 125	RUA	Samples
LM4050QAIM3X5.0/NOPB	ACTIVE	SOT-23	DBZ	3	3000	Green (RoHS & no Sb/Br)	CU SN	Level-1-260C-UNLIM	-40 to 125	RVA	Samples
LM4050QAIM3X8.2/NOPB	ACTIVE	SOT-23	DBZ	3	3000	Green (RoHS & no Sb/Br)	CU SN	Level-1-260C-UNLIM	-40 to 125	RXA	Samples
LM4050QBEM3-10/NOPB	ACTIVE	SOT-23	DBZ	3	1000	Green (RoHS & no Sb/Br)	CU SN	Level-1-260C-UNLIM	-40 to 125	RYB	Samples
LM4050QBEM3-2.0/NOPB	ACTIVE	SOT-23	DBZ	3	1000	Green (RoHS & no Sb/Br)	CU SN	Level-1-260C-UNLIM	-40 to 125	RSB	Samples
LM4050QBEM3-2.5/NOPB	ACTIVE	SOT-23	DBZ	3	1000	Green (RoHS & no Sb/Br)	CU SN	Level-1-260C-UNLIM	-40 to 125	RTB	Samples
LM4050QBEM3-4.1/NOPB	ACTIVE	SOT-23	DBZ	3	1000	Green (RoHS & no Sb/Br)	CU SN	Level-1-260C-UNLIM	-40 to 125	RUB	Samples
LM4050QBEM3-5.0/NOPB	ACTIVE	SOT-23	DBZ	3	1000	Green (RoHS & no Sb/Br)	CU SN	Level-1-260C-UNLIM	-40 to 125	RVB	Samples
LM4050QBEM3-8.2/NOPB	ACTIVE	SOT-23	DBZ	3	1000	Green (RoHS & no Sb/Br)	CU SN	Level-1-260C-UNLIM	-40 to 125	RXB	Samples
LM4050QBEM3X10/NOPB	ACTIVE	SOT-23	DBZ	3	3000	Green (RoHS & no Sb/Br)	CU SN	Level-1-260C-UNLIM	-40 to 125	RYB	Samples
LM4050QBEM3X2.0/NOPB	ACTIVE	SOT-23	DBZ	3	3000	Green (RoHS & no Sb/Br)	CU SN	Level-1-260C-UNLIM	-40 to 125	RSB	Samples

Orderable Device	Status (1)	Package Type	Package Drawing	Pins	Package Qty	Eco Plan (2)	Lead/Ball Finish (6)	MSL Peak Temp (3)	Op Temp (°C)	Device Marking (4/5)	Samples
LM4050QBEM3X2.5/NOPB	ACTIVE	SOT-23	DBZ	3	3000	Green (RoHS & no Sb/Br)	CU SN	Level-1-260C-UNLIM	-40 to 125	RTB	Samples
LM4050QBEM3X4.1/NOPB	ACTIVE	SOT-23	DBZ	3	3000	Green (RoHS & no Sb/Br)	CU SN	Level-1-260C-UNLIM	-40 to 125	RUB	Samples
LM4050QBEM3X5.0/NOPB	ACTIVE	SOT-23	DBZ	3	3000	Green (RoHS & no Sb/Br)	CU SN	Level-1-260C-UNLIM	-40 to 125	RVB	Samples
LM4050QBEM3X8.2/NOPB	ACTIVE	SOT-23	DBZ	3	3000	Green (RoHS & no Sb/Br)	CU SN	Level-1-260C-UNLIM	-40 to 125	RXB	Samples
LM4050QBIM3-10/NOPB	ACTIVE	SOT-23	DBZ	3	1000	Green (RoHS & no Sb/Br)	CU SN	Level-1-260C-UNLIM	-40 to 125	RYB	Samples
LM4050QBIM3-2.0/NOPB	ACTIVE	SOT-23	DBZ	3	1000	Green (RoHS & no Sb/Br)	CU SN	Level-1-260C-UNLIM	-40 to 125	RSB	Samples
LM4050QBIM3-2.5/NOPB	ACTIVE	SOT-23	DBZ	3	1000	Green (RoHS & no Sb/Br)	CU SN	Level-1-260C-UNLIM	-40 to 125	RTB	Samples
LM4050QBIM3-4.1/NOPB	ACTIVE	SOT-23	DBZ	3	1000	Green (RoHS & no Sb/Br)	CU SN	Level-1-260C-UNLIM	-40 to 125	RUB	Samples
LM4050QBIM3-5.0/NOPB	ACTIVE	SOT-23	DBZ	3	1000	Green (RoHS & no Sb/Br)	CU SN	Level-1-260C-UNLIM	-40 to 125	RVB	Samples
LM4050QBIM3-8.2/NOPB	ACTIVE	SOT-23	DBZ	3	1000	Green (RoHS & no Sb/Br)	CU SN	Level-1-260C-UNLIM	-40 to 125	RXB	Samples
LM4050QBIM3X10/NOPB	ACTIVE	SOT-23	DBZ	3	3000	Green (RoHS & no Sb/Br)	CU SN	Level-1-260C-UNLIM	-40 to 125	RYB	Samples
LM4050QBIM3X2.0/NOPB	ACTIVE	SOT-23	DBZ	3	3000	Green (RoHS & no Sb/Br)	CU SN	Level-1-260C-UNLIM	-40 to 125	RSB	Samples
LM4050QBIM3X2.5/NOPB	ACTIVE	SOT-23	DBZ	3	3000	Green (RoHS & no Sb/Br)	CU SN	Level-1-260C-UNLIM	-40 to 125	RTB	Samples
LM4050QBIM3X4.1/NOPB	ACTIVE	SOT-23	DBZ	3	3000	Green (RoHS & no Sb/Br)	CU SN	Level-1-260C-UNLIM	-40 to 125	RUB	Samples
LM4050QBIM3X5.0/NOPB	ACTIVE	SOT-23	DBZ	3	3000	Green (RoHS & no Sb/Br)	CU SN	Level-1-260C-UNLIM	-40 to 125	RVB	Samples
LM4050QBIM3X8.2/NOPB	ACTIVE	SOT-23	DBZ	3	3000	Green (RoHS & no Sb/Br)	CU SN	Level-1-260C-UNLIM	-40 to 125	RXB	Samples
LM4050QCEM3-10/NOPB	ACTIVE	SOT-23	DBZ	3	1000	Green (RoHS & no Sb/Br)	CU SN	Level-1-260C-UNLIM	-40 to 125	RYC	Samples
LM4050QCEM3-2.0/NOPB	ACTIVE	SOT-23	DBZ	3	1000	Green (RoHS & no Sb/Br)	CU SN	Level-1-260C-UNLIM	-40 to 125	RSC	Samples

Orderable Device	Status (1)	Package Type	Package Drawing	Pins	Package Qty	Eco Plan (2)	Lead/Ball Finish (6)	MSL Peak Temp (3)	Op Temp (°C)	Device Marking (4/5)	Samples
LM4050QCEM3-2.5/NOPB	ACTIVE	SOT-23	DBZ	3	1000	Green (RoHS & no Sb/Br)	CU SN	Level-1-260C-UNLIM	-40 to 125	RTC	Samples
LM4050QCEM3-4.1/NOPB	ACTIVE	SOT-23	DBZ	3	1000	Green (RoHS & no Sb/Br)	CU SN	Level-1-260C-UNLIM	-40 to 125	RUC	Samples
LM4050QCEM3-5.0/NOPB	ACTIVE	SOT-23	DBZ	3	1000	Green (RoHS & no Sb/Br)	CU SN	Level-1-260C-UNLIM	-40 to 125	RVC	Samples
LM4050QCEM3-8.2/NOPB	ACTIVE	SOT-23	DBZ	3	1000	Green (RoHS & no Sb/Br)	CU SN	Level-1-260C-UNLIM	-40 to 125	RXC	Samples
LM4050QCEM3X10/NOPB	ACTIVE	SOT-23	DBZ	3	3000	Green (RoHS & no Sb/Br)	CU SN	Level-1-260C-UNLIM	-40 to 125	RYC	Samples
LM4050QCEM3X2.0/NOPB	ACTIVE	SOT-23	DBZ	3	3000	Green (RoHS & no Sb/Br)	CU SN	Level-1-260C-UNLIM	-40 to 125	RSC	Samples
LM4050QCEM3X2.5/NOPB	ACTIVE	SOT-23	DBZ	3	3000	Green (RoHS & no Sb/Br)	CU SN	Level-1-260C-UNLIM	-40 to 125	RTC	Samples
LM4050QCEM3X4.1/NOPB	ACTIVE	SOT-23	DBZ	3	3000	Green (RoHS & no Sb/Br)	CU SN	Level-1-260C-UNLIM	-40 to 125	RUC	Samples
LM4050QCEM3X5.0/NOPB	ACTIVE	SOT-23	DBZ	3	3000	Green (RoHS & no Sb/Br)	CU SN	Level-1-260C-UNLIM	-40 to 125	RVC	Samples
LM4050QCEM3X8.2/NOPB	ACTIVE	SOT-23	DBZ	3	3000	Green (RoHS & no Sb/Br)	CU SN	Level-1-260C-UNLIM	-40 to 125	RXC	Samples
LM4050QCIM3-10/NOPB	ACTIVE	SOT-23	DBZ	3	1000	Green (RoHS & no Sb/Br)	CU SN	Level-1-260C-UNLIM	-40 to 125	RYC	Samples
LM4050QCIM3-2.0/NOPB	ACTIVE	SOT-23	DBZ	3	1000	Green (RoHS & no Sb/Br)	CU SN	Level-1-260C-UNLIM	-40 to 125	RSC	Samples
LM4050QCIM3-2.5/NOPB	ACTIVE	SOT-23	DBZ	3	1000	Green (RoHS & no Sb/Br)	CU SN	Level-1-260C-UNLIM	-40 to 125	RTC	Samples
LM4050QCIM3-4.1/NOPB	ACTIVE	SOT-23	DBZ	3	1000	Green (RoHS & no Sb/Br)	CU SN	Level-1-260C-UNLIM	-40 to 125	RUC	Samples
LM4050QCIM3-5.0/NOPB	ACTIVE	SOT-23	DBZ	3	1000	Green (RoHS & no Sb/Br)	CU SN	Level-1-260C-UNLIM	-40 to 125	RVC	Samples
LM4050QCIM3-8.2/NOPB	ACTIVE	SOT-23	DBZ	3	1000	Green (RoHS & no Sb/Br)	CU SN	Level-1-260C-UNLIM	-40 to 125	RXC	Samples
LM4050QCIM3X10/NOPB	ACTIVE	SOT-23	DBZ	3	3000	Green (RoHS & no Sb/Br)	CU SN	Level-1-260C-UNLIM	-40 to 125	RYC	Samples
LM4050QCIM3X2.0/NOPB	ACTIVE	SOT-23	DBZ	3	3000	Green (RoHS & no Sb/Br)	CU SN	Level-1-260C-UNLIM	-40 to 125	RSC	Samples

Orderable Device	Status (1)	Package Type	Package Drawing	Pins	Package Qty	Eco Plan (2)	Lead/Ball Finish (6)	MSL Peak Temp (3)	Op Temp (°C)	Device Marking (4/5)	Samples
LM4050QCIM3X2.5/NOPB	ACTIVE	SOT-23	DBZ	3	3000	Green (RoHS & no Sb/Br)	CU SN	Level-1-260C-UNLIM	-40 to 125	RTC	Samples
LM4050QCIM3X4.1/NOPB	ACTIVE	SOT-23	DBZ	3	3000	Green (RoHS & no Sb/Br)	CU SN	Level-1-260C-UNLIM	-40 to 125	RUC	Samples
LM4050QCIM3X5.0/NOPB	ACTIVE	SOT-23	DBZ	3	3000	Green (RoHS & no Sb/Br)	CU SN	Level-1-260C-UNLIM	-40 to 125	RVC	Samples

(1) The marketing status values are defined as follows:
ACTIVE: Product device recommended for new designs.
LIFEBUY: TI has announced that the device will be discontinued, and a lifetime-buy period is in effect.
NRND: Not recommended for new designs. Device is in production to support existing customers, but TI does not recommend using this part in a new design.
PREVIEW: Device has been announced but is not in production. Samples may or may not be available.
OBSOLETE: TI has discontinued the production of the device.

(2) Eco Plan - The planned eco-friendly classification: Pb-Free (RoHS), Pb-Free (RoHS Exempt), or Green (RoHS & no Sb/Br) - please check http://www.ti.com/productcontent for the latest availability information and additional product content details.
TBD: The Pb-Free/Green conversion plan has not been defined.
Pb-Free (RoHS): TI's terms "Lead-Free" or "Pb-Free" mean semiconductor products that are compatible with the current RoHS requirements for all 6 substances, including the requirement that lead not exceed 0.1% by weight in homogeneous materials. Where designed to be soldered at high temperatures, TI Pb-Free products are suitable for use in specified lead-free processes.
Pb-Free (RoHS Exempt): This component has a RoHS exemption for either 1) lead-based flip-chip solder bumps used between the die and package, or 2) lead-based die adhesive used between the die and leadframe. The component is otherwise considered Pb-Free (RoHS compatible) as defined above.
Green (RoHS & no Sb/Br): TI defines "Green" to mean Pb-Free (RoHS compatible), and free of Bromine (Br) and Antimony (Sb) based flame retardants (Br or Sb do not exceed 0.1% by weight in homogeneous material)

(3) MSL, Peak Temp. - The Moisture Sensitivity Level rating according to the JEDEC industry standard classifications, and peak solder temperature.

(4) There may be additional marking, which relates to the logo, the lot trace code information, or the environmental category on the device.

(5) Multiple Device Markings will be inside parentheses. Only one Device Marking contained in parentheses and separated by a "~" will appear on a device. If a line is indented then it is a continuation of the previous line and the two combined represent the entire Device Marking for that device.

(6) Lead/Ball Finish - Orderable Devices may have multiple material finish options. Finish options are separated by a vertical ruled line. Lead/Ball Finish values may wrap to two lines if the finish value exceeds the maximum column width.

Important Information and Disclaimer: The information provided on this page represents TI's knowledge and belief as of the date that it is provided. TI bases its knowledge and belief on information provided by third parties, and makes no representation or warranty as to the accuracy of such information. Efforts are underway to better integrate information from third parties. TI has taken and continues to take reasonable steps to provide representative and accurate information but may not have conducted destructive testing or chemical analysis on incoming materials and chemicals. TI and TI suppliers consider certain information to be proprietary, and thus CAS numbers and other limited information may not be available for release.

In no event shall TI's liability arising out of such information exceed the total purchase price of the TI part(s) at issue in this document sold by TI to Customer on an annual basis.

OTHER QUALIFIED VERSIONS OF LM4050-N, LM4050-N-Q1 :

- Catalog: LM4050-N
- Automotive: LM4050-N-Q1

NOTE: Qualified Version Definitions:

- Catalog - TI's standard catalog product
- Automotive - Q100 devices qualified for high-reliability automotive applications targeting zero defects

TAPE AND REEL INFORMATION

REEL DIMENSIONS

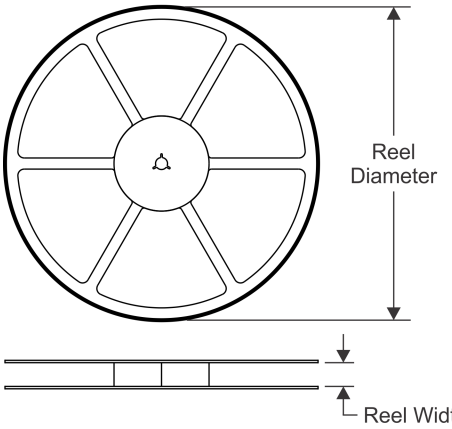

TAPE DIMENSIONS

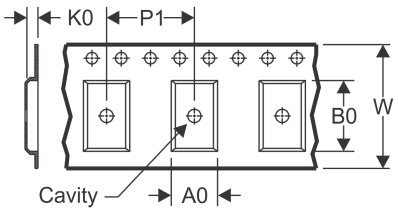

A0	Dimension designed to accommodate the component width
B0	Dimension designed to accommodate the component length
K0	Dimension designed to accommodate the component thickness
W	Overall width of the carrier tape
P1	Pitch between successive cavity centers

QUADRANT ASSIGNMENTS FOR PIN 1 ORIENTATION IN TAPE

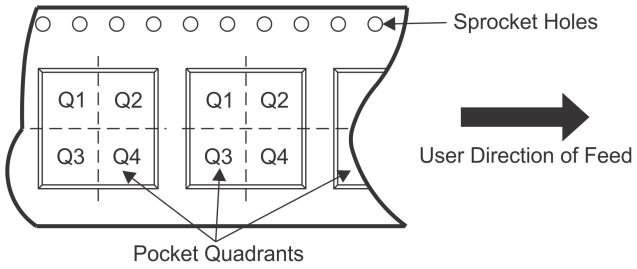

*All dimensions are nominal

Device	Package Type	Package Drawing	Pins	SPQ	Reel Diameter (mm)	Reel Width W1 (mm)	A0 (mm)	B0 (mm)	K0 (mm)	P1 (mm)	W (mm)	Pin1 Quadrant
LM4050AEM3-10	SOT-23	DBZ	3	0	178.0	8.4	3.3	2.9	1.22	4.0	8.0	Q3
LM4050AEM3-10/NOPB	SOT-23	DBZ	3	1000	178.0	8.4	3.3	2.9	1.22	4.0	8.0	Q3
LM4050AEM3-2.0	SOT-23	DBZ	3	1000	178.0	8.4	3.3	2.9	1.22	4.0	8.0	Q3
LM4050AEM3-2.0/NOPB	SOT-23	DBZ	3	1000	178.0	8.4	3.3	2.9	1.22	4.0	8.0	Q3
LM4050AEM3-2.5	SOT-23	DBZ	3	1000	178.0	8.4	3.3	2.9	1.22	4.0	8.0	Q3
LM4050AEM3-2.5/NOPB	SOT-23	DBZ	3	1000	178.0	8.4	3.3	2.9	1.22	4.0	8.0	Q3
LM4050AEM3-5.0	SOT-23	DBZ	3	1000	178.0	8.4	3.3	2.9	1.22	4.0	8.0	Q3
LM4050AEM3-5.0/NOPB	SOT-23	DBZ	3	1000	178.0	8.4	3.3	2.9	1.22	4.0	8.0	Q3
LM4050AEM3-8.2	SOT-23	DBZ	3	1000	178.0	8.4	3.3	2.9	1.22	4.0	8.0	Q3
LM4050AEM3-8.2/NOPB	SOT-23	DBZ	3	1000	178.0	8.4	3.3	2.9	1.22	4.0	8.0	Q3
LM4050AEM3X-10	SOT-23	DBZ	3	3000	178.0	8.4	3.3	2.9	1.22	4.0	8.0	Q3
LM4050AEM3X-10/NOPB	SOT-23	DBZ	3	3000	178.0	8.4	3.3	2.9	1.22	4.0	8.0	Q3
LM4050AEM3X-2.5/NOPB	SOT-23	DBZ	3	3000	178.0	8.4	3.3	2.9	1.22	4.0	8.0	Q3
LM4050AEM3X-5.0/NOPB	SOT-23	DBZ	3	3000	178.0	8.4	3.3	2.9	1.22	4.0	8.0	Q3
LM4050AIM3-10	SOT-23	DBZ	3	1000	178.0	8.4	3.3	2.9	1.22	4.0	8.0	Q3
LM4050AIM3-10/NOPB	SOT-23	DBZ	3	1000	178.0	8.4	3.3	2.9	1.22	4.0	8.0	Q3
LM4050AIM3-2.5	SOT-23	DBZ	3	1000	178.0	8.4	3.3	2.9	1.22	4.0	8.0	Q3
LM4050AIM3-2.5/NOPB	SOT-23	DBZ	3	1000	178.0	8.4	3.3	2.9	1.22	4.0	8.0	Q3

Device	Package Type	Package Drawing	Pins	SPQ	Reel Diameter (mm)	Reel Width W1 (mm)	A0 (mm)	B0 (mm)	K0 (mm)	P1 (mm)	W (mm)	Pin1 Quadrant
LM4050AIM3-4.1	SOT-23	DBZ	3	1000	178.0	8.4	3.3	2.9	1.22	4.0	8.0	Q3
LM4050AIM3-4.1/NOPB	SOT-23	DBZ	3	1000	178.0	8.4	3.3	2.9	1.22	4.0	8.0	Q3
LM4050AIM3-5.0	SOT-23	DBZ	3	1000	178.0	8.4	3.3	2.9	1.22	4.0	8.0	Q3
LM4050AIM3-5.0/NOPB	SOT-23	DBZ	3	1000	178.0	8.4	3.3	2.9	1.22	4.0	8.0	Q3
LM4050AIM3X-2.5	SOT-23	DBZ	3	3000	178.0	8.4	3.3	2.9	1.22	4.0	8.0	Q3
LM4050AIM3X-2.5/NOPB	SOT-23	DBZ	3	3000	178.0	8.4	3.3	2.9	1.22	4.0	8.0	Q3
LM4050AIM3X-4.1/NOPB	SOT-23	DBZ	3	3000	178.0	8.4	3.3	2.9	1.22	4.0	8.0	Q3
LM4050AIM3X-5.0	SOT-23	DBZ	3	3000	178.0	8.4	3.3	2.9	1.22	4.0	8.0	Q3
LM4050AIM3X-5.0/NOPB	SOT-23	DBZ	3	3000	178.0	8.4	3.3	2.9	1.22	4.0	8.0	Q3
LM4050BEM3-10/NOPB	SOT-23	DBZ	3	1000	178.0	8.4	3.3	2.9	1.22	4.0	8.0	Q3
LM4050BEM3-2.5	SOT-23	DBZ	3	1000	178.0	8.4	3.3	2.9	1.22	4.0	8.0	Q3
LM4050BEM3-2.5/NOPB	SOT-23	DBZ	3	1000	178.0	8.4	3.3	2.9	1.22	4.0	8.0	Q3
LM4050BEM3-4.1/NOPB	SOT-23	DBZ	3	1000	178.0	8.4	3.3	2.9	1.22	4.0	8.0	Q3
LM4050BEM3-5.0	SOT-23	DBZ	3	1000	178.0	8.4	3.3	2.9	1.22	4.0	8.0	Q3
LM4050BEM3-5.0/NOPB	SOT-23	DBZ	3	1000	178.0	8.4	3.3	2.9	1.22	4.0	8.0	Q3
LM4050BEM3-8.2/NOPB	SOT-23	DBZ	3	1000	178.0	8.4	3.3	2.9	1.22	4.0	8.0	Q3
LM4050BEM3X-10/NOPB	SOT-23	DBZ	3	3000	178.0	8.4	3.3	2.9	1.22	4.0	8.0	Q3
LM4050BEM3X-2.5/NOPB	SOT-23	DBZ	3	3000	178.0	8.4	3.3	2.9	1.22	4.0	8.0	Q3
LM4050BEM3X-5.0/NOPB	SOT-23	DBZ	3	3000	178.0	8.4	3.3	2.9	1.22	4.0	8.0	Q3
LM4050BIM3-10/NOPB	SOT-23	DBZ	3	1000	178.0	8.4	3.3	2.9	1.22	4.0	8.0	Q3
LM4050BIM3-2.5	SOT-23	DBZ	3	1000	178.0	8.4	3.3	2.9	1.22	4.0	8.0	Q3
LM4050BIM3-2.5/NOPB	SOT-23	DBZ	3	1000	178.0	8.4	3.3	2.9	1.22	4.0	8.0	Q3
LM4050BIM3-4.1/NOPB	SOT-23	DBZ	3	1000	178.0	8.4	3.3	2.9	1.22	4.0	8.0	Q3
LM4050BIM3-5.0	SOT-23	DBZ	3	1000	178.0	8.4	3.3	2.9	1.22	4.0	8.0	Q3
LM4050BIM3-5.0/NOPB	SOT-23	DBZ	3	1000	178.0	8.4	3.3	2.9	1.22	4.0	8.0	Q3
LM4050BIM3X-2.0/NOPB	SOT-23	DBZ	3	3000	178.0	8.4	3.3	2.9	1.22	4.0	8.0	Q3
LM4050BIM3X-2.5/NOPB	SOT-23	DBZ	3	3000	178.0	8.4	3.3	2.9	1.22	4.0	8.0	Q3
LM4050BIM3X-4.1/NOPB	SOT-23	DBZ	3	3000	178.0	8.4	3.3	2.9	1.22	4.0	8.0	Q3
LM4050BIM3X-5.0/NOPB	SOT-23	DBZ	3	3000	178.0	8.4	3.3	2.9	1.22	4.0	8.0	Q3
LM4050CEM3-10/NOPB	SOT-23	DBZ	3	1000	178.0	8.4	3.3	2.9	1.22	4.0	8.0	Q3
LM4050CEM3-2.5	SOT-23	DBZ	3	1000	178.0	8.4	3.3	2.9	1.22	4.0	8.0	Q3
LM4050CEM3-2.5/NOPB	SOT-23	DBZ	3	1000	178.0	8.4	3.3	2.9	1.22	4.0	8.0	Q3
LM4050CEM3-5.0	SOT-23	DBZ	3	1000	178.0	8.4	3.3	2.9	1.22	4.0	8.0	Q3
LM4050CEM3-5.0/NOPB	SOT-23	DBZ	3	1000	178.0	8.4	3.3	2.9	1.22	4.0	8.0	Q3
LM4050CEM3X-2.5/NOPB	SOT-23	DBZ	3	3000	178.0	8.4	3.3	2.9	1.22	4.0	8.0	Q3
LM4050CEM3X-5.0/NOPB	SOT-23	DBZ	3	3000	178.0	8.4	3.3	2.9	1.22	4.0	8.0	Q3
LM4050CIM3-10/NOPB	SOT-23	DBZ	3	1000	178.0	8.4	3.3	2.9	1.22	4.0	8.0	Q3
LM4050CIM3-2.5	SOT-23	DBZ	3	1000	178.0	8.4	3.3	2.9	1.22	4.0	8.0	Q3
LM4050CIM3-2.5/NOPB	SOT-23	DBZ	3	1000	178.0	8.4	3.3	2.9	1.22	4.0	8.0	Q3
LM4050CIM3-4.1	SOT-23	DBZ	3	1000	178.0	8.4	3.3	2.9	1.22	4.0	8.0	Q3
LM4050CIM3-4.1/NOPB	SOT-23	DBZ	3	1000	178.0	8.4	3.3	2.9	1.22	4.0	8.0	Q3
LM4050CIM3-5.0	SOT-23	DBZ	3	1000	178.0	8.4	3.3	2.9	1.22	4.0	8.0	Q3
LM4050CIM3-5.0/NOPB	SOT-23	DBZ	3	1000	178.0	8.4	3.3	2.9	1.22	4.0	8.0	Q3

Device	Package Type	Package Drawing	Pins	SPQ	Reel Diameter (mm)	Reel Width W1 (mm)	A0 (mm)	B0 (mm)	K0 (mm)	P1 (mm)	W (mm)	Pin1 Quadrant
LM4050CIM3X-2.0/NOPB	SOT-23	DBZ	3	3000	178.0	8.4	3.3	2.9	1.22	4.0	8.0	Q3
LM4050CIM3X-2.5/NOPB	SOT-23	DBZ	3	3000	178.0	8.4	3.3	2.9	1.22	4.0	8.0	Q3
LM4050CIM3X-4.1/NOPB	SOT-23	DBZ	3	3000	178.0	8.4	3.3	2.9	1.22	4.0	8.0	Q3
LM4050CIM3X-5.0/NOPB	SOT-23	DBZ	3	3000	178.0	8.4	3.3	2.9	1.22	4.0	8.0	Q3
LM4050QAEM3-10/NOPB	SOT-23	DBZ	3	1000	178.0	8.4	3.3	2.9	1.22	4.0	8.0	Q3
LM4050QAEM3-2.0/NOPB	SOT-23	DBZ	3	1000	178.0	8.4	3.3	2.9	1.22	4.0	8.0	Q3
LM4050QAEM3-2.5/NOPB	SOT-23	DBZ	3	1000	178.0	8.4	3.3	2.9	1.22	4.0	8.0	Q3
LM4050QAEM3-4.1/NOPB	SOT-23	DBZ	3	1000	178.0	8.4	3.3	2.9	1.22	4.0	8.0	Q3
LM4050QAEM3-5.0/NOPB	SOT-23	DBZ	3	1000	178.0	8.4	3.3	2.9	1.22	4.0	8.0	Q3
LM4050QAEM3-8.2/NOPB	SOT-23	DBZ	3	1000	178.0	8.4	3.3	2.9	1.22	4.0	8.0	Q3
LM4050QAEM3X10/NOPB	SOT-23	DBZ	3	3000	178.0	8.4	3.3	2.9	1.22	4.0	8.0	Q3
LM4050QAEM3X2.0/NOPB	SOT-23	DBZ	3	3000	178.0	8.4	3.3	2.9	1.22	4.0	8.0	Q3
LM4050QAEM3X2.5/NOPB	SOT-23	DBZ	3	3000	178.0	8.4	3.3	2.9	1.22	4.0	8.0	Q3
LM4050QAEM3X4.1/NOPB	SOT-23	DBZ	3	3000	178.0	8.4	3.3	2.9	1.22	4.0	8.0	Q3
LM4050QAEM3X5.0/NOPB	SOT-23	DBZ	3	3000	178.0	8.4	3.3	2.9	1.22	4.0	8.0	Q3
LM4050QAEM3X8.2/NOPB	SOT-23	DBZ	3	3000	178.0	8.4	3.3	2.9	1.22	4.0	8.0	Q3
LM4050QAIM3-10/NOPB	SOT-23	DBZ	3	1000	178.0	8.4	3.3	2.9	1.22	4.0	8.0	Q3
LM4050QAIM3-2.0/NOPB	SOT-23	DBZ	3	1000	178.0	8.4	3.3	2.9	1.22	4.0	8.0	Q3
LM4050QAIM3-2.5/NOPB	SOT-23	DBZ	3	1000	178.0	8.4	3.3	2.9	1.22	4.0	8.0	Q3
LM4050QAIM3-4.1/NOPB	SOT-23	DBZ	3	1000	178.0	8.4	3.3	2.9	1.22	4.0	8.0	Q3
LM4050QAIM3-5.0/NOPB	SOT-23	DBZ	3	1000	178.0	8.4	3.3	2.9	1.22	4.0	8.0	Q3
LM4050QAIM3-8.2/NOPB	SOT-23	DBZ	3	1000	178.0	8.4	3.3	2.9	1.22	4.0	8.0	Q3
LM4050QAIM3X10/NOPB	SOT-23	DBZ	3	3000	178.0	8.4	3.3	2.9	1.22	4.0	8.0	Q3
LM4050QAIM3X2.0/NOPB	SOT-23	DBZ	3	3000	178.0	8.4	3.3	2.9	1.22	4.0	8.0	Q3
LM4050QAIM3X2.5/NOPB	SOT-23	DBZ	3	3000	178.0	8.4	3.3	2.9	1.22	4.0	8.0	Q3
LM4050QAIM3X4.1/NOPB	SOT-23	DBZ	3	3000	178.0	8.4	3.3	2.9	1.22	4.0	8.0	Q3
LM4050QAIM3X5.0/NOPB	SOT-23	DBZ	3	3000	178.0	8.4	3.3	2.9	1.22	4.0	8.0	Q3
LM4050QAIM3X8.2/NOPB	SOT-23	DBZ	3	3000	178.0	8.4	3.3	2.9	1.22	4.0	8.0	Q3
LM4050QBEM3-10/NOPB	SOT-23	DBZ	3	1000	178.0	8.4	3.3	2.9	1.22	4.0	8.0	Q3
LM4050QBEM3-2.0/NOPB	SOT-23	DBZ	3	1000	178.0	8.4	3.3	2.9	1.22	4.0	8.0	Q3
LM4050QBEM3-2.5/NOPB	SOT-23	DBZ	3	1000	178.0	8.4	3.3	2.9	1.22	4.0	8.0	Q3
LM4050QBEM3-4.1/NOPB	SOT-23	DBZ	3	1000	178.0	8.4	3.3	2.9	1.22	4.0	8.0	Q3
LM4050QBEM3-5.0/NOP	SOT-23	DBZ	3	1000	178.0	8.4	3.3	2.9	1.22	4.0	8.0	Q3

Device	Package Type	Package Drawing	Pins	SPQ	Reel Diameter (mm)	Reel Width W1 (mm)	A0 (mm)	B0 (mm)	K0 (mm)	P1 (mm)	W (mm)	Pin1 Quadrant
B												
LM4050QBEM3-8.2/NOPB	SOT-23	DBZ	3	1000	178.0	8.4	3.3	2.9	1.22	4.0	8.0	Q3
LM4050QBEM3X10/NOPB	SOT-23	DBZ	3	3000	178.0	8.4	3.3	2.9	1.22	4.0	8.0	Q3
LM4050QBEM3X2.0/NOPB	SOT-23	DBZ	3	3000	178.0	8.4	3.3	2.9	1.22	4.0	8.0	Q3
LM4050QBEM3X2.5/NOPB	SOT-23	DBZ	3	3000	178.0	8.4	3.3	2.9	1.22	4.0	8.0	Q3
LM4050QBEM3X4.1/NOPB	SOT-23	DBZ	3	3000	178.0	8.4	3.3	2.9	1.22	4.0	8.0	Q3
LM4050QBEM3X5.0/NOPB	SOT-23	DBZ	3	3000	178.0	8.4	3.3	2.9	1.22	4.0	8.0	Q3
LM4050QBEM3X8.2/NOPB	SOT-23	DBZ	3	3000	178.0	8.4	3.3	2.9	1.22	4.0	8.0	Q3
LM4050QBIM3-10/NOPB	SOT-23	DBZ	3	1000	178.0	8.4	3.3	2.9	1.22	4.0	8.0	Q3
LM4050QBIM3-2.0/NOPB	SOT-23	DBZ	3	1000	178.0	8.4	3.3	2.9	1.22	4.0	8.0	Q3
LM4050QBIM3-2.5/NOPB	SOT-23	DBZ	3	1000	178.0	8.4	3.3	2.9	1.22	4.0	8.0	Q3
LM4050QBIM3-4.1/NOPB	SOT-23	DBZ	3	1000	178.0	8.4	3.3	2.9	1.22	4.0	8.0	Q3
LM4050QBIM3-5.0/NOPB	SOT-23	DBZ	3	1000	178.0	8.4	3.3	2.9	1.22	4.0	8.0	Q3
LM4050QBIM3-8.2/NOPB	SOT-23	DBZ	3	1000	178.0	8.4	3.3	2.9	1.22	4.0	8.0	Q3
LM4050QBIM3X10/NOPB	SOT-23	DBZ	3	3000	178.0	8.4	3.3	2.9	1.22	4.0	8.0	Q3
LM4050QBIM3X2.0/NOPB	SOT-23	DBZ	3	3000	178.0	8.4	3.3	2.9	1.22	4.0	8.0	Q3
LM4050QBIM3X2.5/NOPB	SOT-23	DBZ	3	3000	178.0	8.4	3.3	2.9	1.22	4.0	8.0	Q3
LM4050QBIM3X4.1/NOPB	SOT-23	DBZ	3	3000	178.0	8.4	3.3	2.9	1.22	4.0	8.0	Q3
LM4050QBIM3X5.0/NOPB	SOT-23	DBZ	3	3000	178.0	8.4	3.3	2.9	1.22	4.0	8.0	Q3
LM4050QBIM3X8.2/NOPB	SOT-23	DBZ	3	3000	178.0	8.4	3.3	2.9	1.22	4.0	8.0	Q3
LM4050QCEM3-10/NOPB	SOT-23	DBZ	3	1000	178.0	8.4	3.3	2.9	1.22	4.0	8.0	Q3
LM4050QCEM3-2.0/NOPB	SOT-23	DBZ	3	1000	178.0	8.4	3.3	2.9	1.22	4.0	8.0	Q3
LM4050QCEM3-2.5/NOPB	SOT-23	DBZ	3	1000	178.0	8.4	3.3	2.9	1.22	4.0	8.0	Q3
LM4050QCEM3-4.1/NOPB	SOT-23	DBZ	3	1000	178.0	8.4	3.3	2.9	1.22	4.0	8.0	Q3
LM4050QCEM3-5.0/NOPB	SOT-23	DBZ	3	1000	178.0	8.4	3.3	2.9	1.22	4.0	8.0	Q3
LM4050QCEM3-8.2/NOPB	SOT-23	DBZ	3	1000	178.0	8.4	3.3	2.9	1.22	4.0	8.0	Q3
LM4050QCEM3X10/NOPB	SOT-23	DBZ	3	3000	178.0	8.4	3.3	2.9	1.22	4.0	8.0	Q3
LM4050QCEM3X2.0/NOPB	SOT-23	DBZ	3	3000	178.0	8.4	3.3	2.9	1.22	4.0	8.0	Q3
LM4050QCEM3X2.5/NOPB	SOT-23	DBZ	3	3000	178.0	8.4	3.3	2.9	1.22	4.0	8.0	Q3
LM4050QCEM3X4.1/NOPB	SOT-23	DBZ	3	3000	178.0	8.4	3.3	2.9	1.22	4.0	8.0	Q3
LM4050QCEM3X5.0/NOPB	SOT-23	DBZ	3	3000	178.0	8.4	3.3	2.9	1.22	4.0	8.0	Q3

Device	Package Type	Package Drawing	Pins	SPQ	Reel Diameter (mm)	Reel Width W1 (mm)	A0 (mm)	B0 (mm)	K0 (mm)	P1 (mm)	W (mm)	Pin1 Quadrant
LM4050QCEM3X8.2/NOPB	SOT-23	DBZ	3	3000	178.0	8.4	3.3	2.9	1.22	4.0	8.0	Q3
LM4050QCIM3-10/NOPB	SOT-23	DBZ	3	1000	178.0	8.4	3.3	2.9	1.22	4.0	8.0	Q3
LM4050QCIM3-2.0/NOPB	SOT-23	DBZ	3	1000	178.0	8.4	3.3	2.9	1.22	4.0	8.0	Q3
LM4050QCIM3-2.5/NOPB	SOT-23	DBZ	3	1000	178.0	8.4	3.3	2.9	1.22	4.0	8.0	Q3
LM4050QCIM3-4.1/NOPB	SOT-23	DBZ	3	1000	178.0	8.4	3.3	2.9	1.22	4.0	8.0	Q3
LM4050QCIM3-5.0/NOPB	SOT-23	DBZ	3	1000	178.0	8.4	3.3	2.9	1.22	4.0	8.0	Q3
LM4050QCIM3-8.2/NOPB	SOT-23	DBZ	3	1000	178.0	8.4	3.3	2.9	1.22	4.0	8.0	Q3
LM4050QCIM3X10/NOPB	SOT-23	DBZ	3	3000	178.0	8.4	3.3	2.9	1.22	4.0	8.0	Q3
LM4050QCIM3X2.0/NOPB	SOT-23	DBZ	3	3000	178.0	8.4	3.3	2.9	1.22	4.0	8.0	Q3
LM4050QCIM3X2.5/NOPB	SOT-23	DBZ	3	3000	178.0	8.4	3.3	2.9	1.22	4.0	8.0	Q3
LM4050QCIM3X4.1/NOPB	SOT-23	DBZ	3	3000	178.0	8.4	3.3	2.9	1.22	4.0	8.0	Q3
LM4050QCIM3X5.0/NOPB	SOT-23	DBZ	3	3000	178.0	8.4	3.3	2.9	1.22	4.0	8.0	Q3

TAPE AND REEL BOX DIMENSIONS

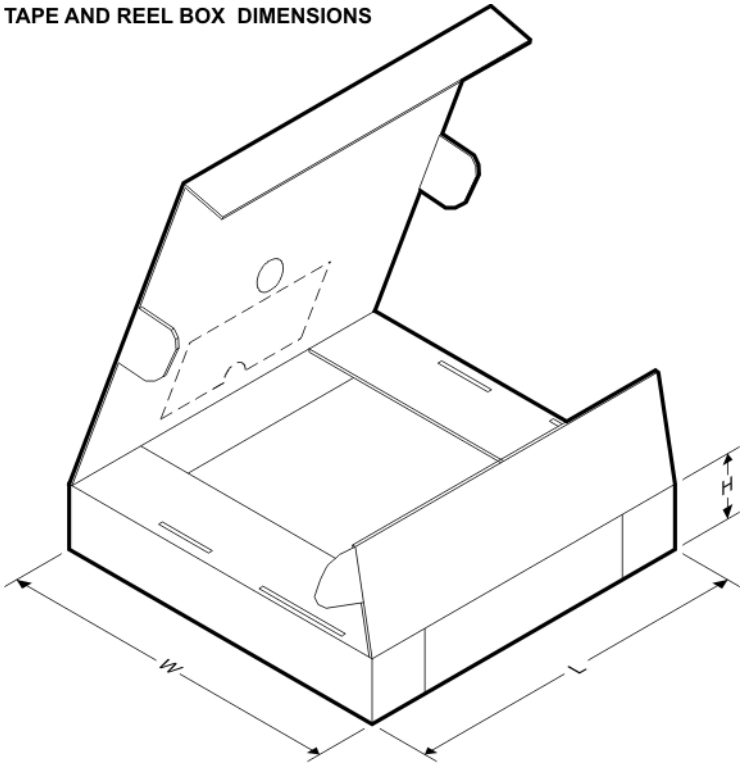

*All dimensions are nominal

Device	Package Type	Package Drawing	Pins	SPQ	Length (mm)	Width (mm)	Height (mm)
LM4050AEM3-10	SOT-23	DBZ	3	0	210.0	185.0	35.0

Device	Package Type	Package Drawing	Pins	SPQ	Length (mm)	Width (mm)	Height (mm)
LM4050AEM3-10/NOPB	SOT-23	DBZ	3	1000	210.0	185.0	35.0
LM4050AEM3-2.0	SOT-23	DBZ	3	1000	210.0	185.0	35.0
LM4050AEM3-2.0/NOPB	SOT-23	DBZ	3	1000	210.0	185.0	35.0
LM4050AEM3-2.5	SOT-23	DBZ	3	1000	210.0	185.0	35.0
LM4050AEM3-2.5/NOPB	SOT-23	DBZ	3	1000	210.0	185.0	35.0
LM4050AEM3-5.0	SOT-23	DBZ	3	1000	210.0	185.0	35.0
LM4050AEM3-5.0/NOPB	SOT-23	DBZ	3	1000	210.0	185.0	35.0
LM4050AEM3-8.2	SOT-23	DBZ	3	1000	210.0	185.0	35.0
LM4050AEM3-8.2/NOPB	SOT-23	DBZ	3	1000	210.0	185.0	35.0
LM4050AEM3X-10	SOT-23	DBZ	3	3000	210.0	185.0	35.0
LM4050AEM3X-10/NOPB	SOT-23	DBZ	3	3000	210.0	185.0	35.0
LM4050AEM3X-2.5/NOPB	SOT-23	DBZ	3	3000	210.0	185.0	35.0
LM4050AEM3X-5.0/NOPB	SOT-23	DBZ	3	3000	210.0	185.0	35.0
LM4050AIM3-10	SOT-23	DBZ	3	1000	210.0	185.0	35.0
LM4050AIM3-10/NOPB	SOT-23	DBZ	3	1000	210.0	185.0	35.0
LM4050AIM3-2.5	SOT-23	DBZ	3	1000	210.0	185.0	35.0
LM4050AIM3-2.5/NOPB	SOT-23	DBZ	3	1000	210.0	185.0	35.0
LM4050AIM3-4.1	SOT-23	DBZ	3	1000	210.0	185.0	35.0
LM4050AIM3-4.1/NOPB	SOT-23	DBZ	3	1000	210.0	185.0	35.0
LM4050AIM3-5.0	SOT-23	DBZ	3	1000	210.0	185.0	35.0
LM4050AIM3-5.0/NOPB	SOT-23	DBZ	3	1000	210.0	185.0	35.0
LM4050AIM3X-2.5	SOT-23	DBZ	3	3000	210.0	185.0	35.0
LM4050AIM3X-2.5/NOPB	SOT-23	DBZ	3	3000	210.0	185.0	35.0
LM4050AIM3X-4.1/NOPB	SOT-23	DBZ	3	3000	210.0	185.0	35.0
LM4050AIM3X-5.0	SOT-23	DBZ	3	3000	210.0	185.0	35.0
LM4050AIM3X-5.0/NOPB	SOT-23	DBZ	3	3000	210.0	185.0	35.0
LM4050BEM3-10/NOPB	SOT-23	DBZ	3	1000	210.0	185.0	35.0
LM4050BEM3-2.5	SOT-23	DBZ	3	1000	210.0	185.0	35.0
LM4050BEM3-2.5/NOPB	SOT-23	DBZ	3	1000	210.0	185.0	35.0
LM4050BEM3-4.1/NOPB	SOT-23	DBZ	3	1000	210.0	185.0	35.0
LM4050BEM3-5.0	SOT-23	DBZ	3	1000	210.0	185.0	35.0
LM4050BEM3-5.0/NOPB	SOT-23	DBZ	3	1000	210.0	185.0	35.0
LM4050BEM3-8.2/NOPB	SOT-23	DBZ	3	1000	210.0	185.0	35.0
LM4050BEM3X-10/NOPB	SOT-23	DBZ	3	3000	210.0	185.0	35.0
LM4050BEM3X-2.5/NOPB	SOT-23	DBZ	3	3000	210.0	185.0	35.0
LM4050BEM3X-5.0/NOPB	SOT-23	DBZ	3	3000	210.0	185.0	35.0
LM4050BIM3-10/NOPB	SOT-23	DBZ	3	1000	210.0	185.0	35.0
LM4050BIM3-2.5	SOT-23	DBZ	3	1000	210.0	185.0	35.0
LM4050BIM3-2.5/NOPB	SOT-23	DBZ	3	1000	210.0	185.0	35.0
LM4050BIM3-4.1/NOPB	SOT-23	DBZ	3	1000	210.0	185.0	35.0
LM4050BIM3-5.0	SOT-23	DBZ	3	1000	210.0	185.0	35.0
LM4050BIM3-5.0/NOPB	SOT-23	DBZ	3	1000	210.0	185.0	35.0
LM4050BIM3X-2.0/NOPB	SOT-23	DBZ	3	3000	210.0	185.0	35.0
LM4050BIM3X-2.5/NOPB	SOT-23	DBZ	3	3000	210.0	185.0	35.0

Device	Package Type	Package Drawing	Pins	SPQ	Length (mm)	Width (mm)	Height (mm)
LM4050BIM3X-4.1/NOPB	SOT-23	DBZ	3	3000	210.0	185.0	35.0
LM4050BIM3X-5.0/NOPB	SOT-23	DBZ	3	3000	210.0	185.0	35.0
LM4050CEM3-10/NOPB	SOT-23	DBZ	3	1000	210.0	185.0	35.0
LM4050CEM3-2.5	SOT-23	DBZ	3	1000	210.0	185.0	35.0
LM4050CEM3-2.5/NOPB	SOT-23	DBZ	3	1000	210.0	185.0	35.0
LM4050CEM3-5.0	SOT-23	DBZ	3	1000	210.0	185.0	35.0
LM4050CEM3-5.0/NOPB	SOT-23	DBZ	3	1000	210.0	185.0	35.0
LM4050CEM3X-2.5/NOPB	SOT-23	DBZ	3	3000	210.0	185.0	35.0
LM4050CEM3X-5.0/NOPB	SOT-23	DBZ	3	3000	210.0	185.0	35.0
LM4050CIM3-10/NOPB	SOT-23	DBZ	3	1000	210.0	185.0	35.0
LM4050CIM3-2.5	SOT-23	DBZ	3	1000	210.0	185.0	35.0
LM4050CIM3-2.5/NOPB	SOT-23	DBZ	3	1000	210.0	185.0	35.0
LM4050CIM3-4.1	SOT-23	DBZ	3	1000	210.0	185.0	35.0
LM4050CIM3-4.1/NOPB	SOT-23	DBZ	3	1000	210.0	185.0	35.0
LM4050CIM3-5.0	SOT-23	DBZ	3	1000	210.0	185.0	35.0
LM4050CIM3-5.0/NOPB	SOT-23	DBZ	3	1000	210.0	185.0	35.0
LM4050CIM3X-2.0/NOPB	SOT-23	DBZ	3	3000	210.0	185.0	35.0
LM4050CIM3X-2.5/NOPB	SOT-23	DBZ	3	3000	210.0	185.0	35.0
LM4050CIM3X-4.1/NOPB	SOT-23	DBZ	3	3000	210.0	185.0	35.0
LM4050CIM3X-5.0/NOPB	SOT-23	DBZ	3	3000	210.0	185.0	35.0
LM4050QAEM3-10/NOPB	SOT-23	DBZ	3	1000	210.0	185.0	35.0
LM4050QAEM3-2.0/NOPB	SOT-23	DBZ	3	1000	210.0	185.0	35.0
LM4050QAEM3-2.5/NOPB	SOT-23	DBZ	3	1000	210.0	185.0	35.0
LM4050QAEM3-4.1/NOPB	SOT-23	DBZ	3	1000	210.0	185.0	35.0
LM4050QAEM3-5.0/NOPB	SOT-23	DBZ	3	1000	210.0	185.0	35.0
LM4050QAEM3-8.2/NOPB	SOT-23	DBZ	3	1000	210.0	185.0	35.0
LM4050QAEM3X10/NOPB	SOT-23	DBZ	3	3000	210.0	185.0	35.0
LM4050QAEM3X2.0/NOPB	SOT-23	DBZ	3	3000	210.0	185.0	35.0
LM4050QAEM3X2.5/NOPB	SOT-23	DBZ	3	3000	210.0	185.0	35.0
LM4050QAEM3X4.1/NOPB	SOT-23	DBZ	3	3000	210.0	185.0	35.0
LM4050QAEM3X5.0/NOPB	SOT-23	DBZ	3	3000	210.0	185.0	35.0
LM4050QAEM3X8.2/NOPB	SOT-23	DBZ	3	3000	210.0	185.0	35.0
LM4050QAIM3-10/NOPB	SOT-23	DBZ	3	1000	210.0	185.0	35.0
LM4050QAIM3-2.0/NOPB	SOT-23	DBZ	3	1000	210.0	185.0	35.0
LM4050QAIM3-2.5/NOPB	SOT-23	DBZ	3	1000	210.0	185.0	35.0
LM4050QAIM3-4.1/NOPB	SOT-23	DBZ	3	1000	210.0	185.0	35.0
LM4050QAIM3-5.0/NOPB	SOT-23	DBZ	3	1000	210.0	185.0	35.0
LM4050QAIM3-8.2/NOPB	SOT-23	DBZ	3	1000	210.0	185.0	35.0
LM4050QAIM3X10/NOPB	SOT-23	DBZ	3	3000	210.0	185.0	35.0
LM4050QAIM3X2.0/NOPB	SOT-23	DBZ	3	3000	210.0	185.0	35.0

Device	Package Type	Package Drawing	Pins	SPQ	Length (mm)	Width (mm)	Height (mm)
LM4050QAIM3X2.5/NOPB	SOT-23	DBZ	3	3000	210.0	185.0	35.0
LM4050QAIM3X4.1/NOPB	SOT-23	DBZ	3	3000	210.0	185.0	35.0
LM4050QAIM3X5.0/NOPB	SOT-23	DBZ	3	3000	210.0	185.0	35.0
LM4050QAIM3X8.2/NOPB	SOT-23	DBZ	3	3000	210.0	185.0	35.0
LM4050QBEM3-10/NOPB	SOT-23	DBZ	3	1000	210.0	185.0	35.0
LM4050QBEM3-2.0/NOPB	SOT-23	DBZ	3	1000	210.0	185.0	35.0
LM4050QBEM3-2.5/NOPB	SOT-23	DBZ	3	1000	210.0	185.0	35.0
LM4050QBEM3-4.1/NOPB	SOT-23	DBZ	3	1000	210.0	185.0	35.0
LM4050QBEM3-5.0/NOPB	SOT-23	DBZ	3	1000	210.0	185.0	35.0
LM4050QBEM3-8.2/NOPB	SOT-23	DBZ	3	1000	210.0	185.0	35.0
LM4050QBEM3X10/NOPB	SOT-23	DBZ	3	3000	210.0	185.0	35.0
LM4050QBEM3X2.0/NOPB	SOT-23	DBZ	3	3000	210.0	185.0	35.0
LM4050QBEM3X2.5/NOPB	SOT-23	DBZ	3	3000	210.0	185.0	35.0
LM4050QBEM3X4.1/NOPB	SOT-23	DBZ	3	3000	210.0	185.0	35.0
LM4050QBEM3X5.0/NOPB	SOT-23	DBZ	3	3000	210.0	185.0	35.0
LM4050QBEM3X8.2/NOPB	SOT-23	DBZ	3	3000	210.0	185.0	35.0
LM4050QBIM3-10/NOPB	SOT-23	DBZ	3	1000	210.0	185.0	35.0
LM4050QBIM3-2.0/NOPB	SOT-23	DBZ	3	1000	210.0	185.0	35.0
LM4050QBIM3-2.5/NOPB	SOT-23	DBZ	3	1000	210.0	185.0	35.0
LM4050QBIM3-4.1/NOPB	SOT-23	DBZ	3	1000	210.0	185.0	35.0
LM4050QBIM3-5.0/NOPB	SOT-23	DBZ	3	1000	210.0	185.0	35.0
LM4050QBIM3-8.2/NOPB	SOT-23	DBZ	3	1000	210.0	185.0	35.0
LM4050QBIM3X10/NOPB	SOT-23	DBZ	3	3000	210.0	185.0	35.0
LM4050QBIM3X2.0/NOPB	SOT-23	DBZ	3	3000	210.0	185.0	35.0
LM4050QBIM3X2.5/NOPB	SOT-23	DBZ	3	3000	210.0	185.0	35.0
LM4050QBIM3X4.1/NOPB	SOT-23	DBZ	3	3000	210.0	185.0	35.0
LM4050QBIM3X5.0/NOPB	SOT-23	DBZ	3	3000	210.0	185.0	35.0
LM4050QBIM3X8.2/NOPB	SOT-23	DBZ	3	3000	210.0	185.0	35.0
LM4050QCEM3-10/NOPB	SOT-23	DBZ	3	1000	210.0	185.0	35.0
LM4050QCEM3-2.0/NOPB	SOT-23	DBZ	3	1000	210.0	185.0	35.0
LM4050QCEM3-2.5/NOPB	SOT-23	DBZ	3	1000	210.0	185.0	35.0
LM4050QCEM3-4.1/NOPB	SOT-23	DBZ	3	1000	210.0	185.0	35.0
LM4050QCEM3-5.0/NOPB	SOT-23	DBZ	3	1000	210.0	185.0	35.0
LM4050QCEM3-8.2/NOPB	SOT-23	DBZ	3	1000	210.0	185.0	35.0
LM4050QCEM3X10/NOPB	SOT-23	DBZ	3	3000	210.0	185.0	35.0
LM4050QCEM3X2.0/NOPB	SOT-23	DBZ	3	3000	210.0	185.0	35.0
LM4050QCEM3X2.5/NOPB	SOT-23	DBZ	3	3000	210.0	185.0	35.0
LM4050QCEM3X4.1/NOPB	SOT-23	DBZ	3	3000	210.0	185.0	35.0

Device	Package Type	Package Drawing	Pins	SPQ	Length (mm)	Width (mm)	Height (mm)
LM4050QCEM3X5.0/NOPB	SOT-23	DBZ	3	3000	210.0	185.0	35.0
LM4050QCEM3X8.2/NOPB	SOT-23	DBZ	3	3000	210.0	185.0	35.0
LM4050QCIM3-10/NOPB	SOT-23	DBZ	3	1000	210.0	185.0	35.0
LM4050QCIM3-2.0/NOPB	SOT-23	DBZ	3	1000	210.0	185.0	35.0
LM4050QCIM3-2.5/NOPB	SOT-23	DBZ	3	1000	210.0	185.0	35.0
LM4050QCIM3-4.1/NOPB	SOT-23	DBZ	3	1000	210.0	185.0	35.0
LM4050QCIM3-5.0/NOPB	SOT-23	DBZ	3	1000	210.0	185.0	35.0
LM4050QCIM3-8.2/NOPB	SOT-23	DBZ	3	1000	210.0	185.0	35.0
LM4050QCIM3X10/NOPB	SOT-23	DBZ	3	3000	210.0	185.0	35.0
LM4050QCIM3X2.0/NOPB	SOT-23	DBZ	3	3000	210.0	185.0	35.0
LM4050QCIM3X2.5/NOPB	SOT-23	DBZ	3	3000	210.0	185.0	35.0
LM4050QCIM3X4.1/NOPB	SOT-23	DBZ	3	3000	210.0	185.0	35.0
LM4050QCIM3X5.0/NOPB	SOT-23	DBZ	3	3000	210.0	185.0	35.0

DBZ (R–PDSO–G3) PLASTIC SMALL–OUTLINE

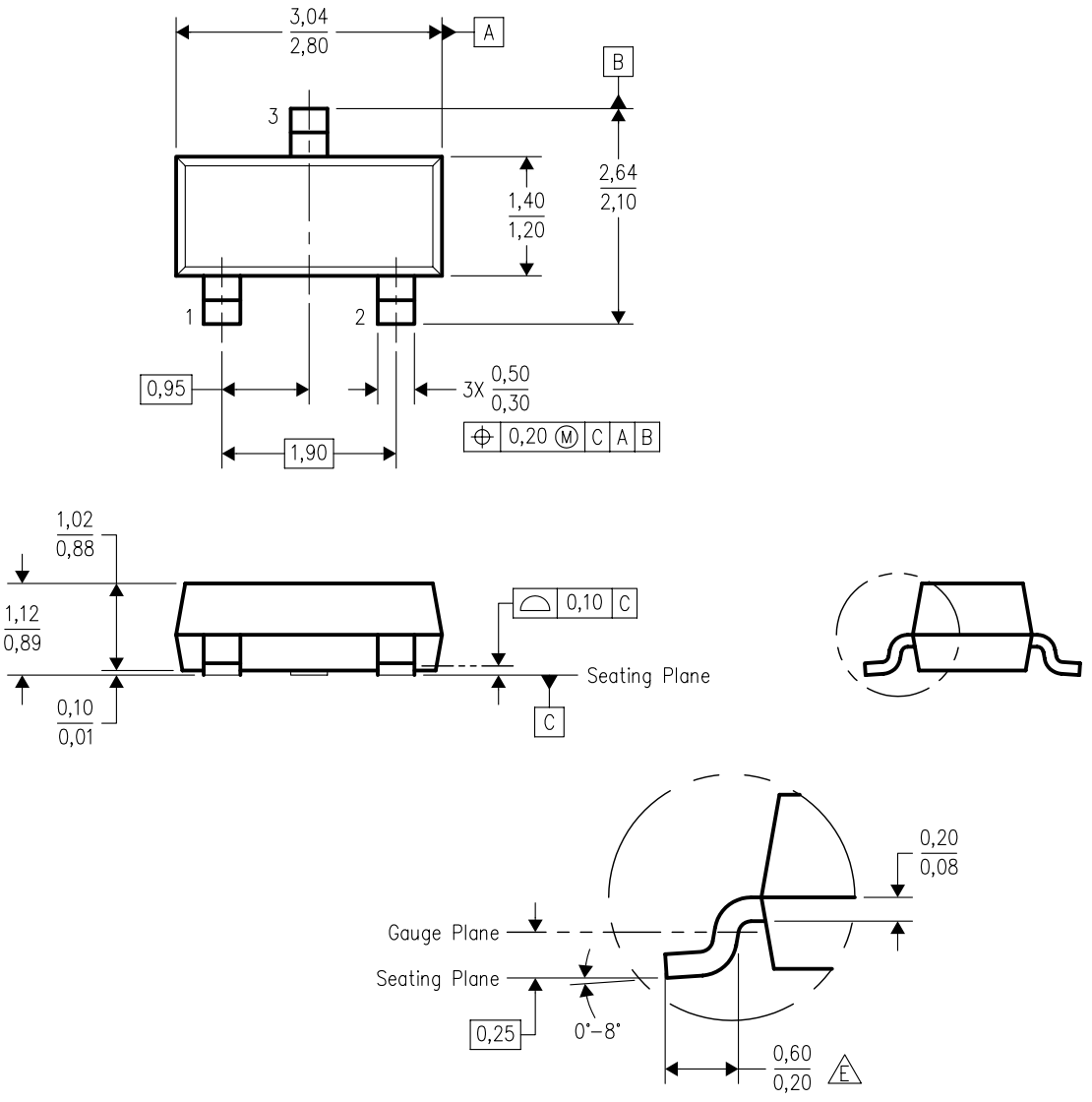

NOTES:
A. All linear dimensions are in millimeters. Dimensioning and tolerancing per ASME Y14.5M–1994.
B. This drawing is subject to change without notice.
C. Lead dimensions are inclusive of plating.
D. Body dimensions are exclusive of mold flash and protrusion. Mold flash and protrusion not to exceed 0.25 per side.
E. Falls within JEDEC TO–236 variation AB, except minimum foot length.

IMPORTANT NOTICE

Texas Instruments Incorporated and its subsidiaries (TI) reserve the right to make corrections, enhancements, improvements and other changes to its semiconductor products and services per JESD46, latest issue, and to discontinue any product or service per JESD48, latest issue. Buyers should obtain the latest relevant information before placing orders and should verify that such information is current and complete. All semiconductor products (also referred to herein as “components”) are sold subject to TI’s terms and conditions of sale supplied at the time of order acknowledgment.

TI warrants performance of its components to the specifications applicable at the time of sale, in accordance with the warranty in TI’s terms and conditions of sale of semiconductor products. Testing and other quality control techniques are used to the extent TI deems necessary to support this warranty. Except where mandated by applicable law, testing of all parameters of each component is not necessarily performed.

TI assumes no liability for applications assistance or the design of Buyers’ products. Buyers are responsible for their products and applications using TI components. To minimize the risks associated with Buyers’ products and applications, Buyers should provide adequate design and operating safeguards.

TI does not warrant or represent that any license, either express or implied, is granted under any patent right, copyright, mask work right, or other intellectual property right relating to any combination, machine, or process in which TI components or services are used. Information published by TI regarding third-party products or services does not constitute a license to use such products or services or a warranty or endorsement thereof. Use of such information may require a license from a third party under the patents or other intellectual property of the third party, or a license from TI under the patents or other intellectual property of TI.

Reproduction of significant portions of TI information in TI data books or data sheets is permissible only if reproduction is without alteration and is accompanied by all associated warranties, conditions, limitations, and notices. TI is not responsible or liable for such altered documentation. Information of third parties may be subject to additional restrictions.

Resale of TI components or services with statements different from or beyond the parameters stated by TI for that component or service voids all express and any implied warranties for the associated TI component or service and is an unfair and deceptive business practice. TI is not responsible or liable for any such statements.

Buyer acknowledges and agrees that it is solely responsible for compliance with all legal, regulatory and safety-related requirements concerning its products, and any use of TI components in its applications, notwithstanding any applications-related information or support that may be provided by TI. Buyer represents and agrees that it has all the necessary expertise to create and implement safeguards which anticipate dangerous consequences of failures, monitor failures and their consequences, lessen the likelihood of failures that might cause harm and take appropriate remedial actions. Buyer will fully indemnify TI and its representatives against any damages arising out of the use of any TI components in safety-critical applications.

In some cases, TI components may be promoted specifically to facilitate safety-related applications. With such components, TI’s goal is to help enable customers to design and create their own end-product solutions that meet applicable functional safety standards and requirements. Nonetheless, such components are subject to these terms.

No TI components are authorized for use in FDA Class III (or similar life-critical medical equipment) unless authorized officers of the parties have executed a special agreement specifically governing such use.

Only those TI components which TI has specifically designated as military grade or “enhanced plastic” are designed and intended for use in military/aerospace applications or environments. Buyer acknowledges and agrees that any military or aerospace use of TI components which have ***not*** been so designated is solely at the Buyer's risk, and that Buyer is solely responsible for compliance with all legal and regulatory requirements in connection with such use.

TI has specifically designated certain components as meeting ISO/TS16949 requirements, mainly for automotive use. In any case of use of non-designated products, TI will not be responsible for any failure to meet ISO/TS16949.

Products		**Applications**	
Audio	www.ti.com/audio	Automotive and Transportation	www.ti.com/automotive
Amplifiers	amplifier.ti.com	Communications and Telecom	www.ti.com/communications
Data Converters	dataconverter.ti.com	Computers and Peripherals	www.ti.com/computers
DLP® Products	www.dlp.com	Consumer Electronics	www.ti.com/consumer-apps
DSP	dsp.ti.com	Energy and Lighting	www.ti.com/energy
Clocks and Timers	www.ti.com/clocks	Industrial	www.ti.com/industrial
Interface	interface.ti.com	Medical	www.ti.com/medical
Logic	logic.ti.com	Security	www.ti.com/security
Power Mgmt	power.ti.com	Space, Avionics and Defense	www.ti.com/space-avionics-defense
Microcontrollers	microcontroller.ti.com	Video and Imaging	www.ti.com/video
RFID	www.ti-rfid.com		
OMAP Applications Processors	www.ti.com/omap	**TI E2E Community**	e2e.ti.com
Wireless Connectivity	www.ti.com/wirelessconnectivity		

Mailing Address: Texas Instruments, Post Office Box 655303, Dallas, Texas 75265
Copyright © 2013, Texas Instruments Incorporated