LM4041-N/LM4041-N-Q1 Precision Micropower Shunt Voltage Reference

Check for Samples: LM4041-N, LM4041-N-Q1

FEATURES

- **Available in Standard, AEC Q-100 Grade 1 (Extended Temp. Range) and Grade 3 (Industrial Temp. Range) Qualified Versions (SOT-23 only)**
- **Small Packages: SOT-23, TO-92, and SC70**
- **No Output Capacitor Required**
- **Tolerates Capacitive Loads**
- **Reverse Breakdown Voltage Options of 1.225V and Adjustable**

APPLICATIONS

- **Portable, Battery-Powered Equipment**
- **Data Acquisition Systems**
- **Instrumentation**
- **Process Control**
- **Energy Management**
- **Automotive**
- **Precision Audio Components**

DESCRIPTION

Ideal for space critical applications, the LM4041-N precision voltage reference is available in the sub-miniature SC70 and SOT-23 surface-mount packages. The LM4041-N's advanced design eliminates the need for an external stabilizing capacitor while ensuring stability with any capacitive load, thus making the LM4041-N easy to use. Further reducing design effort is the availability of a fixed (1.225V) and adjustable reverse breakdown voltage. The minimum operating current is 60 µA for the LM4041-N 1.2 and the LM4041-N ADJ. Both versions have a maximum operating current of 12 mA.

The LM4041-N utilizes fuse and zener-zap reverse breakdown or reference voltage trim during wafer sort to ensure that the prime parts have an accuracy of better than ±0.1% (A grade) at 25°C. Bandgap reference temperature drift curvature correction and low dynamic impedance ensure stable reverse breakdown voltage accuracy over a wide range of operating temperatures and currents.

Key Specifications (LM4041-N/LM4041-N-Q1 1.2)

Output voltage tolerance (A grade, 25°C)	±0.1%(max)
Low output noise (10 Hz to 10kHz)	20µV_{rms}
Wide operating current range	60µA to 12mA
Industrial temperature range (LM4041A/B-N, LM4041-N-Q1A/Q1B)	−40°C to +85°C
Extended temperature range (LM4041C/D/E-N, LM4041-N-Q1C/Q1D/Q1E)	−40°C to +125°C
Low temperature coefficient	100 ppm/°C (max)

Connection Diagrams

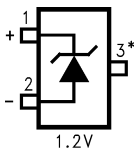

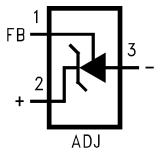

*This pin must be left floating or connected to pin 2.

Figure 1. SOT-23 - Top View
See Package Number DBZ0003A
(JEDEC Registration TO-236AB)

Please be aware that an important notice concerning availability, standard warranty, and use in critical applications of Texas Instruments semiconductor products and disclaimers thereto appears at the end of this data sheet.

All trademarks are the property of their respective owners.

PRODUCTION DATA information is current as of publication date. Products conform to specifications per the terms of the Texas Instruments standard warranty. Production processing does not necessarily include testing of all parameters.

Copyright © 1999–2013, Texas Instruments Incorporated

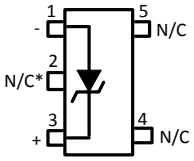

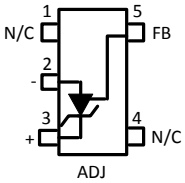

*This pin must be left floating or connected to pin 1.

Figure 2. SC70 - Top View
See Package Number DCK0005A

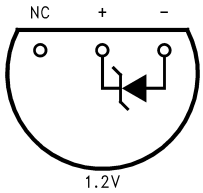

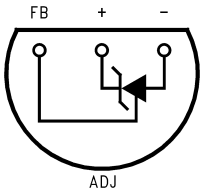

Figure 3. TO-92
Bottom View
See Package Number LP0003A

These devices have limited built-in ESD protection. The leads should be shorted together or the device placed in conductive foam during storage or handling to prevent electrostatic damage to the MOS gates.

Absolute Maximum Ratings(1)(2)

Reverse Current			20 mA
Forward Current			10 mA
Maximum Output Voltage (LM4041-N ADJ, LM4041-N-Q1 ADJ)			15V
Power Dissipation (T_A = 25°C)(3)		DBZ Package	306 mW
		LP Package	550 mW
		DCK Package	241mW
Storage Temperature			−65°C to +150°C
Lead Temperature	DBZ Packages	Vapor phase (60 seconds)	+215°C
		Infrared (15 seconds)	+220°C
	LP Package	Soldering (10 seconds)	+260°C
ESD Susceptibility		Human Body Model(4)	2 kV
		Machine Model(4)	200V
See AN-450 “Surface Mounting Methods and Their Effect on Product Reliability” for other methods of soldering surface mount devices SNOA472.			

(1) Absolute Maximum Ratings indicate limits beyond which damage to the device may occur. Operating Ratings indicate conditions for which the device is functional, but do not ensure specific performance limits. For ensured specifications and test conditions, see the Electrical Characteristics. The ensured specifications apply only for the test conditions listed. Some performance characteristics may degrade when the device is not operated under the listed test conditions.
(2) If Military/Aerospace specified devices are required, please contact the TI Sales Office/ Distributors for availability and specifications.
(3) The maximum power dissipation must be derated at elevated temperatures and is dictated by T_{Jmax} (maximum junction temperature), θ_{JA} (junction to ambient thermal resistance), and T_A (ambient temperature). The maximum allowable power dissipation at any temperature is $PD_{max} = (T_{Jmax} - T_A)/\theta_{JA}$ or the number given in the Absolute Maximum Ratings, whichever is lower. For the LM4041-N, T_{Jmax} = 125°C, and the typical thermal resistance (θ_{JA}), when board mounted, is 326°C/W for the SOT-23 package, 415°C/W for the SC70 package and 180°C/W with 0.4″ lead length and 170°C/W with 0.125″ lead length for the TO-92 package.
(4) The human body model is a 100 pF capacitor discharged through a 1.5 kΩ resistor into each pin. The machine model is a 200 pF capacitor discharged directly into each pin. All pins are rated at 2kV for Human Body Model, but the feedback pin which is rated at 1kV.

Copyright © 1999–2013, Texas Instruments Incorporated

Operating Ratings[1][2]

Temperature Range		($T_{min} \le T_A \le T_{max}$)
Industrial Temperature Range		−40°C ≤ T_A ≤ +85°C
Extended Temperature Range		−40°C ≤ T_A ≤ +125°C
Reverse Current	LM4041-N 1.2, LM4041-N-Q1 1.2	60 µA to 12 mA
	LM4041-N ADJ, LM4041-N-Q1 ADJ	60 µA to 12 mA
Output Voltage Range	LM4041-N ADJ, LM4041-N-Q1 ADJ	1.24V to 10V

(1) Absolute Maximum Ratings indicate limits beyond which damage to the device may occur. Operating Ratings indicate conditions for which the device is functional, but do not ensure specific performance limits. For ensured specifications and test conditions, see the Electrical Characteristics. The ensured specifications apply only for the test conditions listed. Some performance characteristics may degrade when the device is not operated under the listed test conditions.

(2) The maximum power dissipation must be derated at elevated temperatures and is dictated by T_{Jmax} (maximum junction temperature), θ_{JA} (junction to ambient thermal resistance), and T_A (ambient temperature). The maximum allowable power dissipation at any temperature is $PD_{max} = (T_{Jmax} - T_A)/\theta_{JA}$ or the number given in the Absolute Maximum Ratings, whichever is lower. For the LM4041-N, T_{Jmax} = 125°C, and the typical thermal resistance (θ_{JA}), when board mounted, is 326°C/W for the SOT-23 package, 415°C/W for the SC70 package and 180°C/W with 0.4″ lead length and 170°C/W with 0.125″ lead length for the TO-92 package.

LM4041-N/LM4041-N-Q1 1.2 Electrical Characteristics (Industrial Temperature Range)

Boldface limits apply for $T_A = T_J = T_{MIN}$ to T_{MAX}; all other limits $T_A = T_J$ = 25°C. The grades A and B designate initial Reverse Breakdown Voltage tolerances of ±0.1% and ±0.2%, respectively.

Symbol	Parameter	Conditions	Typical[1]	LM4041AIM3 LM4041QAIM3 LM4041AIM3 LM4041AIZ Limits[2]	LM4041BIM3 LM4041QBIM3 LM4041BIZ LM4041BIM7 Limits[2]	Units (Limit)
V_R	Reverse Breakdown Voltage	I_R = 100 µA	1.225			V
	Reverse Breakdown Voltage Tolerance[3]	I_R = 100 µA		±1.2 **±9.2**	±2.4 **±10.4**	mV (max) mV (max)
I_{RMIN}	Minimum Operating Current		45	 60 **65**	 60 **65**	µA µA (max) µA (max)
$\Delta V_R/\Delta T$	Average Reverse Breakdown Voltage Temperature Coefficient[3]	I_R= 10 mA I_R = 1 mA I_R = 100 µA	±20 ±15 ±15	 **±100**	 **±100**	ppm/°C ppm/°C (max) ppm/°C

(1) Typicals are at T_J = 25°C and represent most likely parametric norm.

(2) Limits are 100% production tested at 25°C. Limits over temperature are ensured through correlation using Statistical Quality Control (SQC) methods. The limits are used to calculate AOQL.

(3) The boldface (over-temperature) limit for Reverse Breakdown Voltage Tolerance is defined as the room temperature Reverse Breakdown Voltage Tolerance ±[(ΔV_R/ΔT)(max ΔT)(V_R)]. Where, $\Delta V_R/\Delta T$ is the V_R temperature coefficient, maxΔT is the maximum difference in temperature from the reference point of 25 °C to T_{MAX} or T_{MIN}, and V_R is the reverse breakdown voltage. The total over-temperature tolerance for the different grades in the industrial temperature range where maxΔT=65°C is shown below:
A-grade: ±0.75% = ±0.1% ±100 ppm/°C × 65°C
B-grade: ±0.85% = ±0.2% ±100 ppm/°C × 65°C
C-grade: ±1.15% = ±0.5% ±100 ppm/°C × 65°C
D-grade: ±1.98% = ±1.0% ±150 ppm/°C × 65°C
E-grade: ±2.98% = ±2.0% ±150 ppm/°C × 65°C
The total over-temperature tolerance for the different grades in the extended temperature range where max ΔT = 100 °C is shown below:
B-grade: ±1.2% = ±0.2% ±100 ppm/°C × 100°C
C-grade: ±1.5% = ±0.5% ±100 ppm/°C × 100°C
D-grade: ±2.5% = ±1.0% ±150 ppm/°C × 100°C
E-grade: ±4.5% = ±2.0% ±150 ppm/°C × 100°C
Therefore, as an example, the A-grade LM4041-N 1.2 has an over-temperature Reverse Breakdown Voltage tolerance of ±1.2V × 0.75% = ±9.2 mV.

Copyright © 1999–2013, Texas Instruments Incorporated

LM4041-N/LM4041-N-Q1 1.2 Electrical Characteristics (Industrial Temperature Range) (continued)

Boldface limits apply for $T_A = T_J = T_{MIN}$ to T_{MAX}; all other limits $T_A = T_J = 25°C$. The grades A and B designate initial Reverse Breakdown Voltage tolerances of ±0.1% and ±0.2%, respectively.

Symbol	Parameter	Conditions	Typical (1)	LM4041AIM3 LM4041QAIM3 LM4041AIM3 LM4041AIZ Limits (2)	LM4041BIM3 LM4041QBIM3 LM4041BIZ LM4041BIM7 Limits (2)	Units (Limit)
$\Delta V_R/\Delta I_R$	Reverse Breakdown Voltage Change with Operating Current Change (4)	$I_{RMIN} \le I_R \le 1$ mA	0.7			mV
				1.5	1.5	mV (max)
				2.0	**2.0**	mV (max)
		1 mA ≤ I_R ≤ 12 mA	4.0			mV
				6.0	6.0	mV (max)
				8.0	**8.0**	mV (max)
Z_R	Reverse Dynamic Impedance	I_R = 1 mA, f = 120 Hz, I_{AC}= 0.1 I_R	0.5			Ω
				1.5	1.5	Ω (max)
e_N	Wideband Noise	I_R = 100 µA 10 Hz ≤ f ≤ 10 kHz	20			μV_{rms}
ΔV_R	Reverse Breakdown Voltage Long Term Stability	t = 1000 hrs T = 25°C ±0.1°C I_R = 100 µA	120			ppm
V_{HYST}	Thermal Hysteresis (5)	ΔT = −40°C to +125°C	0.08			%

(4) Load regulation is measured on pulse basis from no load to the specified load current. Ouput changes due to die temperature change must be taken into account separately.-

(5) Thermal hysteresis is defined as the difference in voltage measured at +25°C after cycling to temperature -40°C and the 25°C measurement after cycling to temperature +125°C.

Copyright © 1999–2013, Texas Instruments Incorporated

LM4041-N/LM4041-N-Q1 1.2 Electrical Characteristics (Industrial Temperature Range)

Boldface limits apply for $T_A = T_J = T_{MIN}$ to T_{MAX}; all other limits $T_A = T_J = 25°C$. The grades C, D and E designate initial Reverse Breakdown Voltage tolerances of ±0.5%, ±1.0% and ±2.0%, respectively.

Symbol	Parameter	Conditions	Typical[1]	LM4041CIM3 LM4041QCIM3 LM4041CIZ LM4041CIM7 Limits[2]	LM4041DIM3 LM4041QDIM3 LM4041DIZ LM4041DIM7 Limits[2]	LM4041EIM3 LM4041QEIM3 LM4041EIZ LM4041EIM7 Limits[2]	Units (Limit)
V_R	Reverse Breakdown Voltage	I_R = 100 µA	1.225				V
	Reverse Breakdown Voltage Tolerance[3]	I_R = 100 µA		±6 **±14**	±12 **±24**	±25 **±36**	mV (max) mV (max)
I_{RMIN}	Minimum Operating Current		45	 60 **65**	 65 **70**	 65 **70**	µA µA (max) µA (max)
$\Delta V_R/\Delta T$	V_R Temperature Coefficient[3]	I_R = 10 mA I_R = 1 mA I_R= 100 µA	±20 ±15 ±15	 **±100**	 **±150**	 **±150**	ppm/°C ppm/°C (max) ppm/°C
$\Delta V_R/\Delta I_R$	Reverse Breakdown Voltage Change with Operating Current Change[4]	$I_{RMIN} \le I_R \le$ 1 mA	0.7	 1.5 **2.0**	 2.0 **2.5**	 2.0 **2.5**	mV mV (max) mV (max)
		1 mA ≤ $I_R \le$ 12 mA	2.5	 6.0 **8.0**	 8.0 **10.0**	 8.0 **10.0**	mV mV (max) mV (max)
Z_R	Reverse Dynamic Impedance	I_R = 1 mA, f = 120 Hz I_{AC} = 0.1 I_R	0.5	 1.5	 2.0	 2.0	Ω Ω(max)
e_N	Wideband Noise	I_R = 100 µA 10 Hz ≤ f ≤ 10 kHz	20				μV_{rms}
ΔV_R	Reverse Breakdown Voltage Long Term Stability	t = 1000 hrs T = 25°C ±0.1°C I_R = 100 µA	120				ppm
V_{HYST}	Thermal Hysteresis[5]	ΔT = −40°C to +125°C	0.08				%

(1) Typicals are at T_J = 25°C and represent most likely parametric norm.

(2) Limits are 100% production tested at 25°C. Limits over temperature are ensured through correlation using Statistical Quality Control (SQC) methods. The limits are used to calculate AOQL.

(3) The boldface (over-temperature) limit for Reverse Breakdown Voltage Tolerance is defined as the room temperature Reverse Breakdown Voltage Tolerance ±[(ΔV_R/ΔT)(max ΔT)(V_R)]. Where, $\Delta V_R/\Delta T$ is the V_R temperature coefficient, maxΔT is the maximum difference in temperature from the reference point of 25 °C to T_{MAX} or T_{MIN}, and V_R is the reverse breakdown voltage. The total over-temperature tolerance for the different grades in the industrial temperature range where maxΔT=65°C is shown below:

A-grade: ±0.75% = ±0.1% ±100 ppm/°C × 65°C
B-grade: ±0.85% = ±0.2% ±100 ppm/°C × 65°C
C-grade: ±1.15% = ±0.5% ±100 ppm/°C × 65°C
D-grade: ±1.98% = ±1.0% ±150 ppm/°C × 65°C
E-grade: ±2.98% = ±2.0% ±150 ppm/°C × 65°C

The total over-temperature tolerance for the different grades in the extended temperature range where max ΔT = 100 °C is shown below:

B-grade: ±1.2% = ±0.2% ±100 ppm/°C × 100°C
C-grade: ±1.5% = ±0.5% ±100 ppm/°C × 100°C
D-grade: ±2.5% = ±1.0% ±150 ppm/°C × 100°C
E-grade: ±4.5% = ±2.0% ±150 ppm/°C × 100°C

Therefore, as an example, the A-grade LM4041-N 1.2 has an over-temperature Reverse Breakdown Voltage tolerance of ±1.2V × 0.75% = ±9.2 mV.

(4) Load regulation is measured on pulse basis from no load to the specified load current. Ouput changes due to die temperature change must be taken into account separately.-

(5) Thermal hysteresis is defined as the difference in voltage measured at +25°C after cycling to temperature -40°C and the 25°C measurement after cycling to temperature +125°C.

Copyright © 1999–2013, Texas Instruments Incorporated

LM4041-N/LM4041-N-Q1 1.2 Electrical Characteristics (Extended Temperature Range)

Boldface limits apply for $T_A = T_J = T_{MIN}$ to T_{MAX}; all other limits $T_A = T_J = 25°C$. The grades C, D and E designate initial Reverse Breakdown Voltage tolerance of ±0.5%, ±1.0% and ±2.0% respectively.

Symbol	Parameter	Conditions	Typical (1)	LM4041CEM3 LM4041QCEM3 Limits (2)	LM4041DEM3 LM4041QDEM3 Limits (2)	LM4041EEM3 LM4041QEEM3 Limits (2)	Units (Limit)
V_R	Reverse Breakdown Voltage	I_R = 100 µA	1.225				V
	Reverse Breakdown Voltage Error (3)	I_R = 100 µA		±6 **±18.4**	±12 **±31**	±25 **±43**	mV (max) mV (max)
I_{RMIN}	Minimum Operating Current		45	 60 **68**	 65 **73**	 65 **73**	µA µA (max) µA (max)
$\Delta V_R/\Delta T$	VR Temperature Coefficient (3)	I_R= 10 mA I_R = 1 mA I_R = 100 µA	±20 ±15 ±15	**±100**	**±150**	**±150**	ppm/°C ppm/°C (max) ppm/°C
$\Delta V_R/\Delta I_R$	Reverse Breakdown Change with Current (4)	$I_{RMIN} \le I_R \le$ 1.0 mA	0.7	 1.5 **2.0**	 2.0 **2.5**	 2.0 **2.5**	mV mV (max) mV (max)
		1 mA ≤ $I_R \le$ 12 mA	2.5	 6.0 **8.0**	 8.0 **10.0**	 8.0 **10.0**	mV mV (max) mV (max)
Z_R	Reverse Dynamic Impedance	I_R = 1 mA, f = 120 Hz, I_{AC}= 0.1 I_R	0.5	 **1.5**	 **2.0**	 **2.0**	Ω Ω (max)
e_N	Noise Voltage	I_R = 100 µA 10 Hz ≤ f ≤ 10 kHz	20				μV_{rms}
ΔV_R	Long Term Stability (Non-Cumulative)	t = 1000 hrs T = 25°C ±0.1°C I_R = 100 µA	120				ppm
V_{HYST}	Thermal Hysteresis (5)	ΔT = −40°C to +125°C	0.08				%

(1) Typicals are at T_J = 25°C and represent most likely parametric norm.

(2) Limits are 100% production tested at 25°C. Limits over temperature are ensured through correlation using Statistical Quality Control (SQC) methods. The limits are used to calculate AOQL.

(3) The boldface (over-temperature) limit for Reverse Breakdown Voltage Tolerance is defined as the room temperature Reverse Breakdown Voltage Tolerance ±[(ΔV_R/ΔT)(max ΔT)(V_R)]. Where, $\Delta V_R/\Delta T$ is the V_R temperature coefficient, maxΔT is the maximum difference in temperature from the reference point of 25 °C to T_{MAX} or T_{MIN}, and V_R is the reverse breakdown voltage. The total over-temperature tolerance for the different grades in the industrial temperature range where maxΔT=65°C is shown below:

A-grade: ±0.75% = ±0.1% ±100 ppm/°C × 65°C
B-grade: ±0.85% = ±0.2% ±100 ppm/°C × 65°C
C-grade: ±1.15% = ±0.5% ±100 ppm/°C × 65°C
D-grade: ±1.98% = ±1.0% ±150 ppm/°C × 65°C
E-grade: ±2.98% = ±2.0% ±150 ppm/°C × 65°C

The total over-temperature tolerance for the different grades in the extended temperature range where max ΔT = 100 °C is shown below:

B-grade: ±1.2% = ±0.2% ±100 ppm/°C × 100°C
C-grade: ±1.5% = ±0.5% ±100 ppm/°C × 100°C
D-grade: ±2.5% = ±1.0% ±150 ppm/°C × 100°C
E-grade: ±4.5% = ±2.0% ±150 ppm/°C × 100°C

Therefore, as an example, the A-grade LM4041-N 1.2 has an over-temperature Reverse Breakdown Voltage tolerance of ±1.2V × 0.75% = ±9.2 mV.

(4) Load regulation is measured on pulse basis from no load to the specified load current. Ouput changes due to die temperature change must be taken into account separately.-

(5) Thermal hysteresis is defined as the difference in voltage measured at +25°C after cycling to temperature -40°C and the 25°C measurement after cycling to temperature +125°C.

Copyright © 1999–2013, Texas Instruments Incorporated

LM4041-N/LM4041-N-Q1 ADJ (Adjustable) Electrical Characteristics (Industrial Temperature Range)

Boldface limits apply for $T_A = T_J = T_{MIN}$ to T_{MAX}; all other limits T_J = 25°C unless otherwise specified (SOT-23, see(1)), $I_{RMIN} \le I_R \le 12$ mA, $V_{REF} \le V_{OUT} \le 10$V. The grades C and D designate initial Reference Voltage Tolerances of ±0.5% and ±1%, respectively for V_{OUT} = 5V.

Symbol	Parameter	Conditions	Typical(2)	LM4041CIM3 LM4041QCIM3 LM4041CIZ LM4041CIM7 (3)	LM4041DIM3 LM4041QDIM3 LM4041DIZ LM4041DIM7 (3)	Units (Limit)
V_{REF}	Reference Voltage	I_R = 100 µA, V_{OUT} = 5V	1.233			V
	Reference Voltage Tolerance(4)	I_R = 100 µA, V_{OUT} = 5V		±6.2 **±14**	±12 **±24**	mV (max) mV (max)
I_{RMIN}	Minimum Operating Current		45	 60 **65**	 65 **70**	µA µA (max) µA (max)
$\Delta V_{REF}/\Delta I_R$	Reference Voltage Change with Operating Current Change(5)	$I_{RMIN} \le I_R \le 1$ mA SOT-23: $V_{OUT} \ge 1.6$V(6)	0.7	 1.5 **2.0**	 2.0 **2.5**	mV mV (max) mV (max)
		1 mA ≤ I_R ≤ 12 mA SOT-23: $V_{OUT} \ge 1.6$V(6)	2	 4 **6**	 6 **8**	mV mV (max) mV (max)
$\Delta V_{REF}/\Delta V_O$	Reference Voltage Change with Output Voltage Change	I_R = 1 mA	−1.55	 −2.0 **−2.5**	 −2.5 **−3.0**	mV/V mV/V (max) mV/V (max)
I_{FB}	Feedback Current		60	 100 **120**	 150 **200**	nA nA (max) nA (max)
$\Delta V_{REF}/\Delta T$	Average Reference Voltage Temperature Coefficient(4)	V_{OUT} = 5V, I_R = 10 mA I_R = 1 mA I_R = 100 µA	20 15 15	 **±100**	 **±150**	ppm/°C ppm/°C (max) ppm/°C
Z_{OUT}	Dynamic Output Impedance	I_R = 1 mA, f = 120 Hz, I_{AC} = 0.1 I_R $V_{OUT} = V_{REF}$ V_{OUT} = 10V	 0.3 2			 Ω Ω
e_N	Wideband Noise	I_R = 100 µA $V_{OUT} = V_{REF}$ 10 Hz ≤ f ≤ 10 kHz	20			μV_{rms}
ΔV_{REF}	Reference Voltage Long Term Stability	t = 1000 hrs, I_R = 100 µA, T = 25°C ±0.1°C	120			ppm
V_{HYST}	Thermal Hysteresis(7)	ΔT = −40°C to +125°C	0.08			%

(1) When $V_{OUT} \le 1.6$V, the LM4041-N ADJ in the SOT-23 package must operate at reduced I_R. This is caused by the series resistance of the die attach between the die (-) output and the package (-) output pin. See the Output Saturation (SOT-23 only) curve in the Typical Performance Characteristics section.
(2) Typicals are at T_J = 25°C and represent most likely parametric norm.
(3) Limits are 100% production tested at 25°C. Limits over temperature are ensured through correlation using Statistical Quality Control (SQC) methods. The limits are used to calculate AOQL.
(4) Reference voltage and temperature coefficient will change with output voltage. See Typical Performance Characteristics curves.
(5) Load regulation is measured on pulse basis from no load to the specified load current. Ouput changes due to die temperature change must be taken into account separately.-
(6) When $V_{OUT} \le 1.6$V, the LM4041-N ADJ in the SOT-23 package must operate at reduced I_R. This is caused by the series resistance of the die attach between the die (-) output and the package (-) output pin. See the Output Saturation (SOT-23 only) curve in the Typical Performance Characteristics section.
(7) Thermal hysteresis is defined as the difference in voltage measured at +25°C after cycling to temperature -40°C and the 25°C measurement after cycling to temperature +125°C.

Copyright © 1999–2013, Texas Instruments Incorporated

LM4041-N/LM4041-N-Q1 ADJ (Adjustable) Electrical Characteristics (Extended Temperature Range)

Boldface limits apply for $T_A = T_J = T_{MIN}$ to T_{MAX}; all other limits T_J = 25°C unless otherwise specified (SOT-23, see (1)), $I_{RMIN} \le I_R \le 12$ mA, $V_{REF} \le V_{OUT} \le 10$V. The grades C and D designate initial Reference Voltage Tolerances of ±0.5% and ±1%, respectively for V_{OUT} = 5V.

Symbol	Parameter	Conditions	Typical (2)	LM4041CEM3 LM4041QCEM3 (3)	LM4041DEM3 LM4041QDEM3 (3)	Units (Limit)
V_{REF}	Reference Voltage	I_R = 100 µA, V_{OUT} = 5V	1.233			V
	Reference Voltage Tolerance (4)	I_R = 100 µA, V_{OUT} = 5V		±6.2 **±18**	±12 **±30**	mV (max) mV (max)
I_{RMIN}	Minimum Operating Current		45	 60 **68**	 65 **73**	µA µA (max) µA (max)
$\Delta V_{REF}/\Delta I_R$	Reference Voltage Change with Operating Current Change (5)	$I_{RMIN} \le I_R \le 1$ mA SOT-23: $V_{OUT} \ge 1.6V$ (1)	0.7	 1.5 **2.0**	 2.0 **2.5**	mV mV (max) mV (max)
		1 mA ≤ I_R ≤ 12 mA SOT-23: $V_{OUT} \ge 1.6V$ (1)	2	 8 **6**	 10 **8**	mV mV (max) mV (max)
$\Delta V_{REF}/\Delta V_O$	Reference Voltage Change with Output Voltage Change	I_R = 1 mA	−1.55	 −2.0 **−3.0**	 −2.5 **−4.0**	mV/V mV/V (max) mV/V (max)
I_{FB}	Feedback Current		60	 100 **120**	 150 **200**	nA nA (max) nA (max)
$\Delta V_{REF}/\Delta T$	Average Reference Voltage Temperature Coefficient (4)	V_{OUT} = 5V, I_R = 10 mA I_R = 1 mA I_R = 100 µA	20 15 15	 **±100** 	 **±150** 	ppm/°C ppm/°C (max) ppm/°C
Z_{OUT}	Dynamic Output Impedance	I_R = 1 mA, f = 120 Hz, I_{AC} = 0.1 I_R V_{OUT} = V_{REF} V_{OUT} = 10V	 0.3 2			 Ω Ω
e_N	Wideband Noise	I_R = 100 µA, V_{OUT} = V_{REF} 10 Hz ≤ f ≤ 10 kHz	20			μV_{rms}
ΔV_{REF}	Reference Voltage Long Term Stability	t = 1000 hrs, I_R = 100 µA, T = 25°C ±0.1°C	120			ppm
V_{HYST}	Thermal Hysteresis (6)	ΔT = −40°C to +125°C	0.08			%

(1) When $V_{OUT} \le 1.6$V, the LM4041-N ADJ in the SOT-23 package must operate at reduced I_R. This is caused by the series resistance of the die attach between the die (-) output and the package (-) output pin. See the Output Saturation (SOT-23 only) curve in the Typical Performance Characteristics section.
(2) Typicals are at T_J = 25°C and represent most likely parametric norm.
(3) Limits are 100% production tested at 25°C. Limits over temperature are ensured through correlation using Statistical Quality Control (SQC) methods. The limits are used to calculate AOQL.
(4) Reference voltage and temperature coefficient will change with output voltage. See Typical Performance Characteristics curves.
(5) Load regulation is measured on pulse basis from no load to the specified load current. Ouput changes due to die temperature change must be taken into account separately.-
(6) Thermal hysteresis is defined as the difference in voltage measured at +25°C after cycling to temperature -40°C and the 25°C measurement after cycling to temperature +125°C.

Copyright © 1999–2013, Texas Instruments Incorporated

Typical Performance Characteristics

Temperature Drift for Different Average Temperature Coefficient

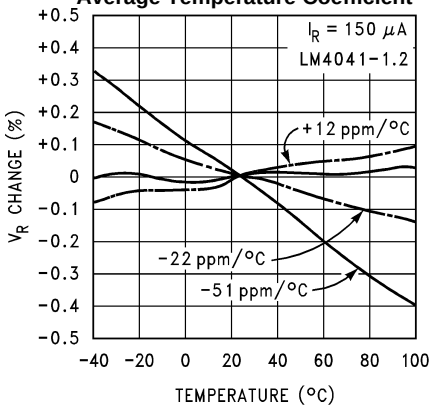

Figure 4.

Output Impedance vs Frequency

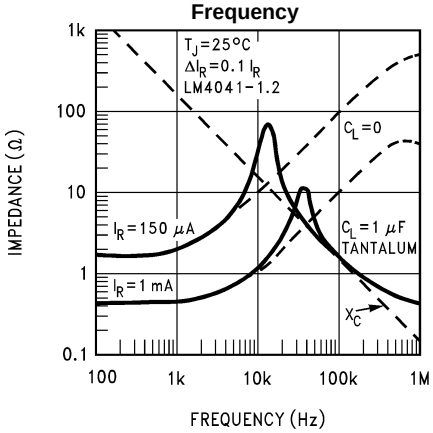

Figure 5.

Noise Voltage

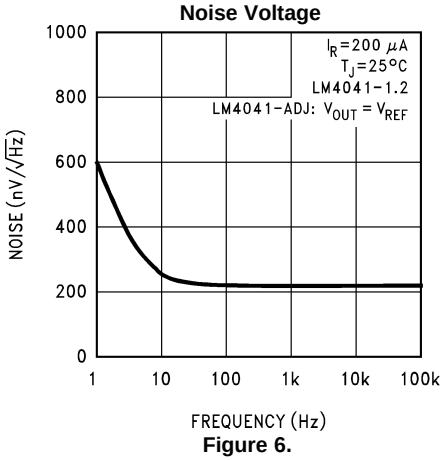

Figure 6.

Reverse Characteristics and Minimum Operating Current

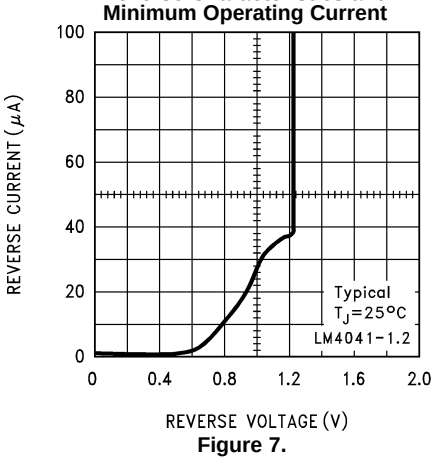

Figure 7.

Start-Up Characteristics

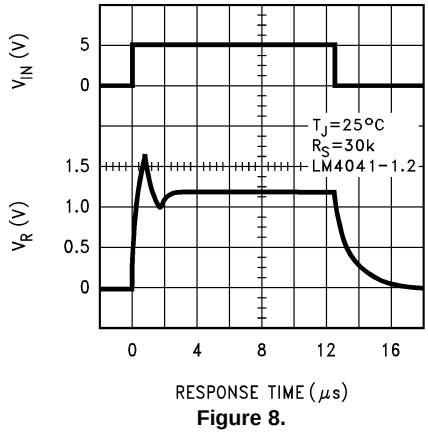

Figure 8.

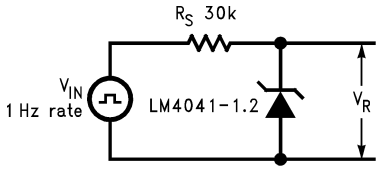

Figure 9.

Typical Performance Characteristics (continued)

Reference Voltage vs Output Voltage and Temperature

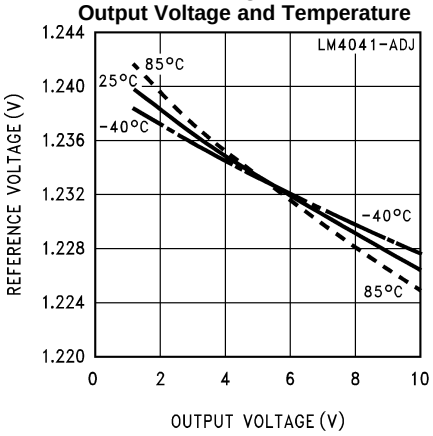

Figure 10.

Reference Voltage vs Temperature and Output Voltage

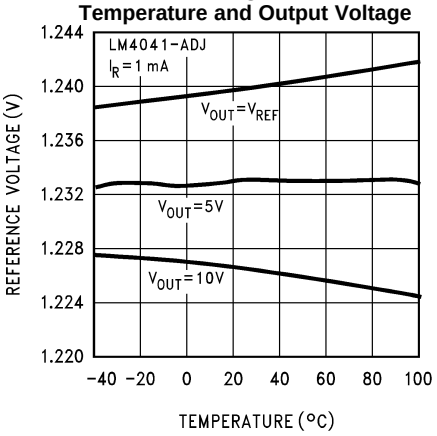

Figure 11.

Feedback Current vs Output Voltage and Temperature

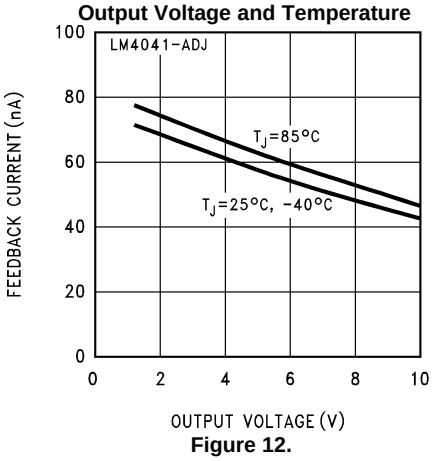

Figure 12.

Output Saturation (SOT-23 Only)

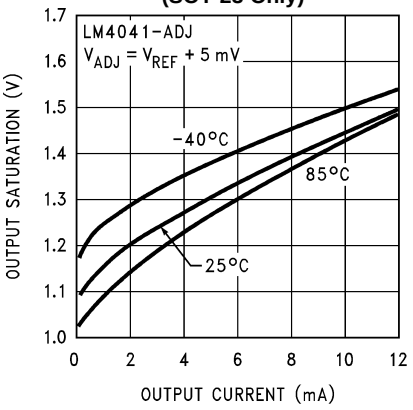

Figure 13.

Output Impedance vs Frequency

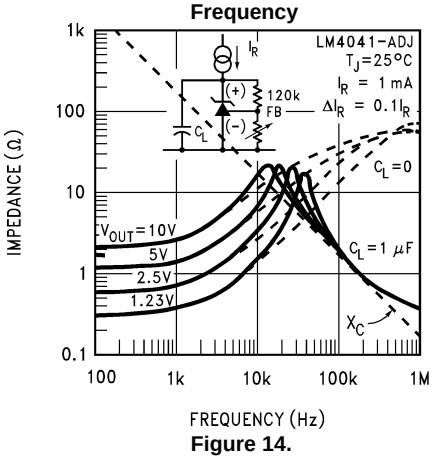

Figure 14.

Output Impedance vs Frequency

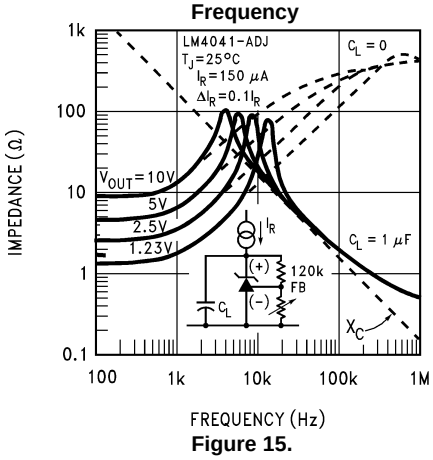

Figure 15.

Copyright © 1999–2013, Texas Instruments Incorporated

Typical Performance Characteristics (continued)

Reverse Characteristics

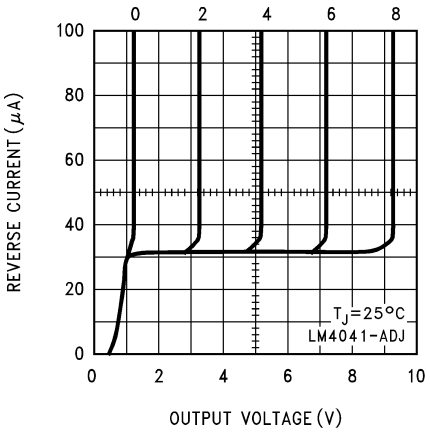

Figure 16.

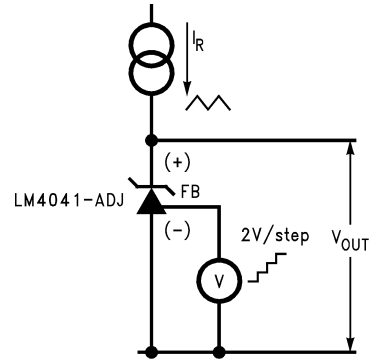

Figure 17.

Large Signal Response

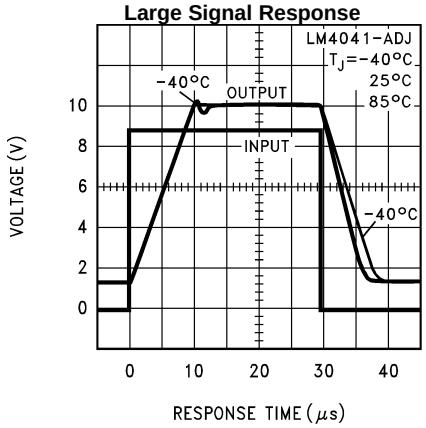

Figure 18.

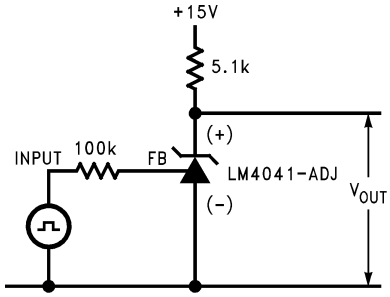

Figure 19.

Functional Block Diagram

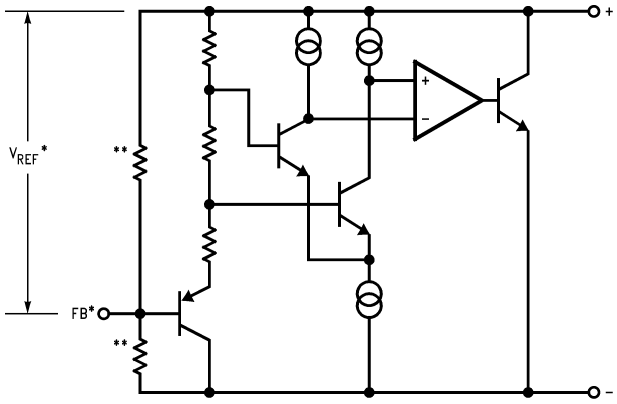

*LM4041-N ADJ only
**LM4041-N 1.2 only

APPLICATIONS INFORMATION

The LM4041-N is a precision micro-power curvature-corrected bandgap shunt voltage reference. For space critical applications, the LM4041-N is available in the sub-miniature SOT-23 and SC70 surface-mount package. The LM4041-N has been designed for stable operation without the need of an external capacitor connected between the “+” pin and the “−” pin. If, however, a bypass capacitor is used, the LM4041-N remains stable. Design effort is further reduced with the choice of either a fixed 1.2V or an adjustable reverse breakdown voltage. The minimum operating current is 60 µA for the LM4041-N 1.2 and the LM4041-N ADJ. Both versions have a maximum operating current of 12 mA.

LM4041-Ns using the SOT-23 package have pin 3 connected as the (-) output through the package's die attach interface. Therefore, the LM4041-N 1.2's pin 3 must be left floating or connected to pin 2 and the LM4041-N ADJ's pin 3 is the (-) output.

LM4041-Ns using the SC70 package have pin 2 connected as the (−) output through the packages' die attach interface. Therefore, the LM4041-N 1.2's pin 2 must be left floating or connected to pin 1, and the LM4041-N ADJ's pin 2 is the (−) output.

The typical thermal hysteresis specification is defined as the change in +25°C voltage measured after thermal cycling. The device is thermal cycled to temperature -40°C and then measured at 25°C. Next the device is thermal cycled to temperature +125°C and again measured at 25°C. The resulting V_{OUT} delta shift between the 25°C measurements is thermal hysteresis. Thermal hysteresis is common in precision references and is induced by thermal-mechanical package stress. Changes in environmental storage temperature, operating temperature and board mounting temperature are all factors that can contribute to thermal hysteresis.

In a conventional shunt regulator application *(Figure 20)*, an external series resistor (R_S) is connected between the supply voltage and the LM4041-N. R_S determines the current that flows through the load (I_L) and the LM4041-N (I_Q). Since load current and supply voltage may vary, R_S should be small enough to supply at least the minimum acceptable I_Q to the LM4041-N even when the supply voltage is at its minimum and the load current is at its maximum value. When the supply voltage is at its maximum and I_L is at its minimum, R_S should be large enough so that the current flowing through the LM4041-N is less than 12 mA.

R_S should be selected based on the supply voltage, (V_S), the desired load and operating current, (I_L and I_Q), and the LM4041-N's reverse breakdown voltage, V_R.

$$R_S = \frac{V_S - V_R}{I_L + I_Q}$$

The LM4041-N ADJ's output voltage can be adjusted to any value in the range of 1.24V through 10V. It is a function of the internal reference voltage (V_{REF}) and the ratio of the external feedback resistors as shown in *Figure 21* . The output voltage is found using the equation

$$V_O = V_{REF}[(R2/R1) + 1]$$

where

Copyright © 1999–2013, Texas Instruments Incorporated

- V_O is the output voltage. The actual value of the internal V_{REF} is a function of V_O. The "corrected" V_{REF} is determined by (1)

$$V_{REF} = \Delta V_O \, (\Delta V_{REF}/\Delta V_O) + V_Y$$

where

- V_Y = 1.240 V

and

- $\Delta V_O = (V_O - V_Y)$ (2)

$\Delta V_{REF}/\Delta V_O$ is found in the Electrical Characteristics and is typically −1.55 mV/V. You can get a more accurate indication of the output voltage by replacing the value of V_{REF} in Equation 1 with the value found using Equation 2.

Note that the actual output voltage can deviate from that predicted using the typical value of $\Delta V_{REF}/\Delta V_O$ in Equation 2: for C-grade parts, the worst-case $\Delta V_{REF}/\Delta V_O$ is −2.5 mV/V. For D-grade parts, the worst-case $\Delta V_{REF}/\Delta V_O$ is −3.0 mV/V.

Typical Applications

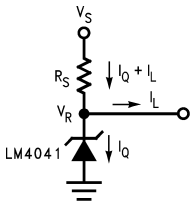

Figure 20. Shunt Regulator

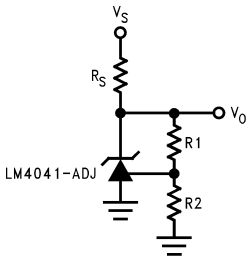

$$V_O = V_{REF}[(R2/R1) + 1]$$

Figure 21. Adjustable Shunt Regulator

Copyright © 1999–2013, Texas Instruments Incorporated

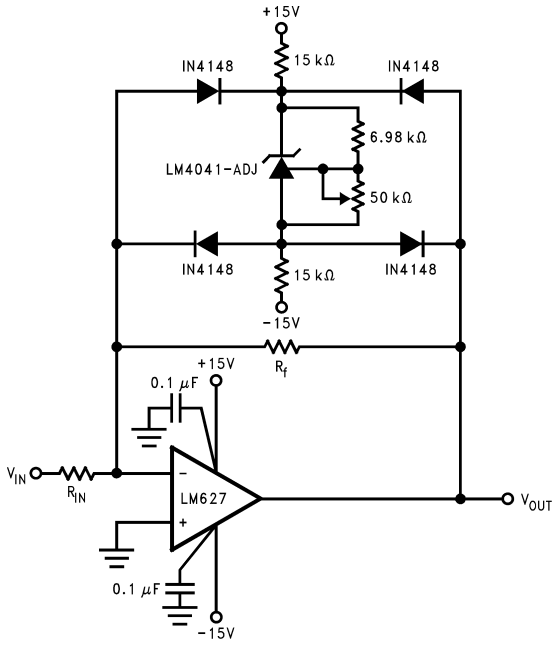

Figure 22. Bounded amplifier reduces saturation-induced delays and can prevent succeeding stage damage. Nominal clamping voltage is ±V_O (LM4041-N's reverse breakdown voltage) +2 diode V_F.

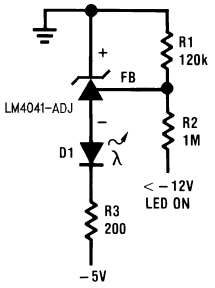

Figure 23. Voltage Level Detector

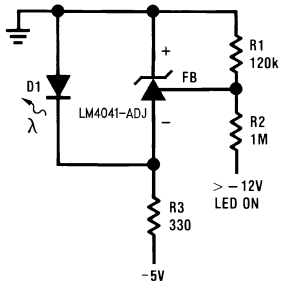

Figure 24. Voltage Level Detector

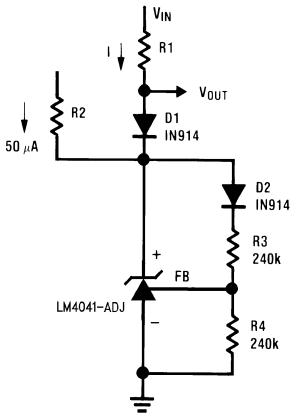

Figure 25. Fast Positive Clamp
2.4V + V_{D1}

Copyright © 1999–2013, Texas Instruments Incorporated

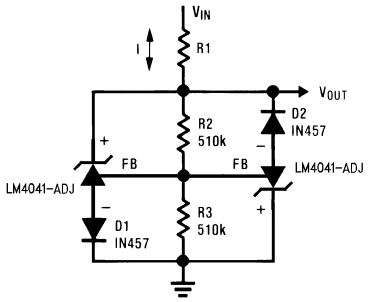

Figure 26. Bidirectional Clamp ±2.4V

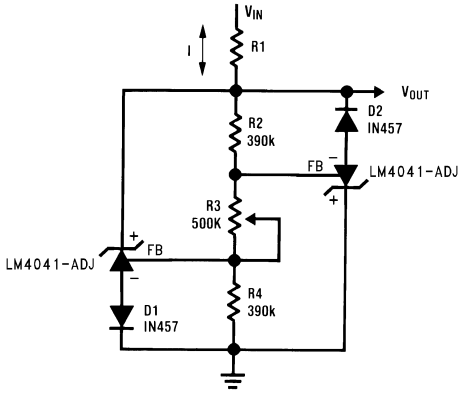

Figure 27. Bidirectional Adjustable Clamp ±18V to ±2.4V

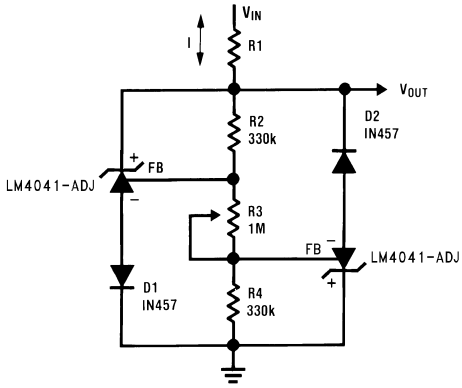

Figure 28. Bidirectional Adjustable Clamp ±2.4V to ±6V

Copyright © 1999–2013, Texas Instruments Incorporated

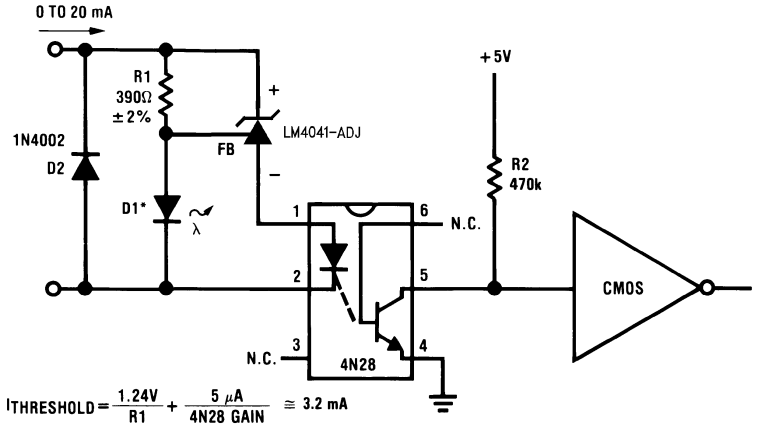

Figure 29. Simple Floating Current Detector

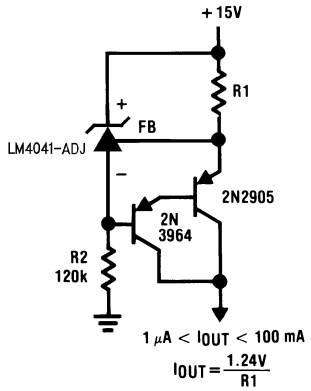

*D1 can be any LED, V_F = 1.5V to 2.2V at 3 mA. D1 may act as an indicator. D1 will be on if $I_{THRESHOLD}$ falls below the threshold current, except with I = 0.

Figure 30. Current Source

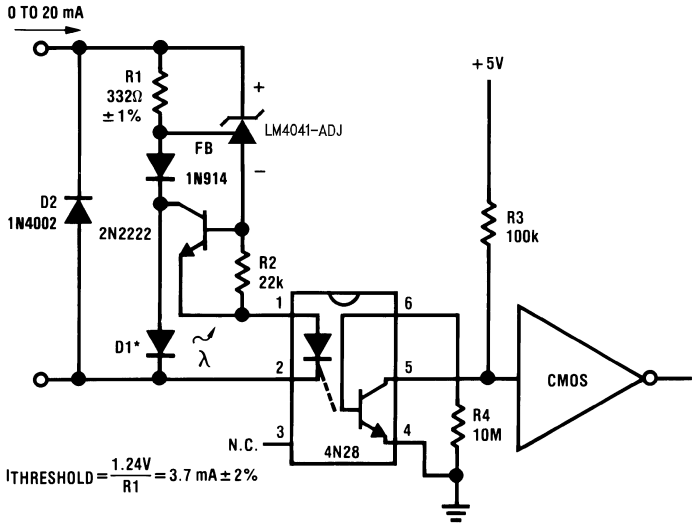

Figure 31. Precision Floating Current Detector

Copyright © 1999–2013, Texas Instruments Incorporated

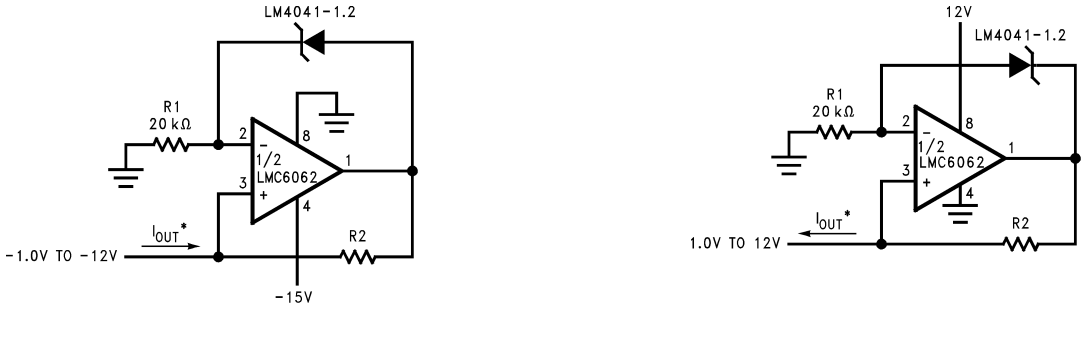

*$I_{OUT} = \frac{1.2V}{R2}$

Figure 32. Precision 1 µA to 1 mA Current Sources

REVISION HISTORY

Changes from Revision D (April 2013) to Revision E	Page
• Changed layout of National Data Sheet to TI format	16

Copyright © 1999–2013, Texas Instruments Incorporated

PACKAGING INFORMATION

Orderable Device	Status (1)	Package Type	Package Drawing	Pins	Package Qty	Eco Plan (2)	Lead/Ball Finish (6)	MSL Peak Temp (3)	Op Temp (°C)	Device Marking (4/5)	Samples
LM4041AIM3-1.2	NRND	SOT-23	DBZ	3	1000	TBD	Call TI	Call TI	-40 to 85	R1A	
LM4041AIM3-1.2/NOPB	ACTIVE	SOT-23	DBZ	3	1000	Green (RoHS & no Sb/Br)	CU SN	Level-1-260C-UNLIM	-40 to 85	R1A	Samples
LM4041AIM3X-1.2/NOPB	ACTIVE	SOT-23	DBZ	3	3000	Green (RoHS & no Sb/Br)	CU SN	Level-1-260C-UNLIM	-40 to 85	R1A	Samples
LM4041AIZ-1.2/NOPB	ACTIVE	TO-92	LP	3	1800	Green (RoHS & no Sb/Br)	SN | CU SN	N / A for Pkg Type	-40 to 85	4041A IZ1.2	Samples
LM4041BIM3-1.2	NRND	SOT-23	DBZ	3	1000	TBD	Call TI	Call TI	-40 to 85	R1B	
LM4041BIM3-1.2/NOPB	ACTIVE	SOT-23	DBZ	3	1000	Green (RoHS & no Sb/Br)	CU SN	Level-1-260C-UNLIM	-40 to 85	R1B	Samples
LM4041BIM3X-1.2/NOPB	ACTIVE	SOT-23	DBZ	3	3000	Green (RoHS & no Sb/Br)	CU SN	Level-1-260C-UNLIM	-40 to 85	R1B	Samples
LM4041BIM7-1.2	NRND	SC70	DCK	5	1000	TBD	Call TI	Call TI	-40 to 85	R1B	
LM4041BIM7-1.2/NOPB	ACTIVE	SC70	DCK	5	1000	Green (RoHS & no Sb/Br)	CU SN	Level-1-260C-UNLIM	-40 to 85	R1B	Samples
LM4041BIM7X-1.2	NRND	SC70	DCK	5	3000	TBD	Call TI	Call TI	-40 to 85	R1B	
LM4041BIM7X-1.2/NOPB	ACTIVE	SC70	DCK	5	3000	Green (RoHS & no Sb/Br)	CU SN	Level-1-260C-UNLIM	-40 to 85	R1B	Samples
LM4041BIZ-1.2/NOPB	ACTIVE	TO-92	LP	3	1800	Green (RoHS & no Sb/Br)	SN | CU SN	N / A for Pkg Type	-40 to 85	4041B IZ1.2	Samples
LM4041CEM3-1.2	NRND	SOT-23	DBZ	3	1000	TBD	Call TI	Call TI	-40 to 125	R1C	
LM4041CEM3-1.2/NOPB	ACTIVE	SOT-23	DBZ	3	1000	Green (RoHS & no Sb/Br)	CU SN	Level-1-260C-UNLIM	-40 to 125	R1C	Samples
LM4041CEM3-ADJ	NRND	SOT-23	DBZ	3	1000	TBD	Call TI	Call TI	-40 to 125	RAC	
LM4041CEM3-ADJ/NOPB	ACTIVE	SOT-23	DBZ	3	1000	Green (RoHS & no Sb/Br)	CU SN	Level-1-260C-UNLIM	-40 to 125	RAC	Samples
LM4041CEM3X-1.2/NOPB	ACTIVE	SOT-23	DBZ	3	3000	Green (RoHS & no Sb/Br)	CU SN	Level-1-260C-UNLIM	-40 to 125	R1C	Samples
LM4041CEM3X-ADJ	NRND	SOT-23	DBZ	3	3000	TBD	Call TI	Call TI	-40 to 125	RAC	
LM4041CEM3X-ADJ/NOPB	ACTIVE	SOT-23	DBZ	3	3000	Green (RoHS & no Sb/Br)	CU SN	Level-1-260C-UNLIM	-40 to 125	RAC	Samples
LM4041CIM3-1.2	NRND	SOT-23	DBZ	3	1000	TBD	Call TI	Call TI	-40 to 85	R1C	

Orderable Device	Status (1)	Package Type	Package Drawing	Pins	Package Qty	Eco Plan (2)	Lead/Ball Finish (6)	MSL Peak Temp (3)	Op Temp (°C)	Device Marking (4/5)	Samples
LM4041CIM3-1.2/NOPB	ACTIVE	SOT-23	DBZ	3	1000	Green (RoHS & no Sb/Br)	CU SN	Level-1-260C-UNLIM	-40 to 85	R1C	Samples
LM4041CIM3-ADJ	NRND	SOT-23	DBZ	3	1000	TBD	Call TI	Call TI	-40 to 85	RAC	
LM4041CIM3-ADJ/NOPB	ACTIVE	SOT-23	DBZ	3	1000	Green (RoHS & no Sb/Br)	CU SN	Level-1-260C-UNLIM	-40 to 85	RAC	Samples
LM4041CIM3X-1.2	NRND	SOT-23	DBZ	3	3000	TBD	Call TI	Call TI	-40 to 85	R1C	
LM4041CIM3X-1.2/NOPB	ACTIVE	SOT-23	DBZ	3	3000	Green (RoHS & no Sb/Br)	CU SN	Level-1-260C-UNLIM	-40 to 85	R1C	Samples
LM4041CIM3X-ADJ	NRND	SOT-23	DBZ	3	3000	TBD	Call TI	Call TI	-40 to 85	RAC	
LM4041CIM3X-ADJ/NOPB	ACTIVE	SOT-23	DBZ	3	3000	Green (RoHS & no Sb/Br)	CU SN	Level-1-260C-UNLIM	-40 to 85	RAC	Samples
LM4041CIM7-1.2/NOPB	ACTIVE	SC70	DCK	5	1000	Green (RoHS & no Sb/Br)	CU SN	Level-1-260C-UNLIM	-40 to 85	R1C	Samples
LM4041CIM7-ADJ	NRND	SC70	DCK	5	1000	TBD	Call TI	Call TI	-40 to 85	RAC	
LM4041CIM7-ADJ/NOPB	ACTIVE	SC70	DCK	5	1000	Green (RoHS & no Sb/Br)	CU SN	Level-1-260C-UNLIM	-40 to 85	RAC	Samples
LM4041CIM7X-1.2/NOPB	ACTIVE	SC70	DCK	5	3000	Green (RoHS & no Sb/Br)	CU SN	Level-1-260C-UNLIM	-40 to 85	R1C	Samples
LM4041CIM7X-ADJ	NRND	SC70	DCK	5	3000	TBD	Call TI	Call TI	-40 to 85	RAC	
LM4041CIM7X-ADJ/NOPB	ACTIVE	SC70	DCK	5	3000	Green (RoHS & no Sb/Br)	CU SN	Level-1-260C-UNLIM	-40 to 85	RAC	Samples
LM4041CIZ-1.2/NOPB	ACTIVE	TO-92	LP	3	1800	Green (RoHS & no Sb/Br)	SN | CU SN	N / A for Pkg Type	-40 to 85	4041C IZ1.2	Samples
LM4041CIZ-ADJ/NOPB	ACTIVE	TO-92	LP	3	1800	Green (RoHS & no Sb/Br)	SN | CU SN	N / A for Pkg Type	-40 to 85	4041C IZADJ	Samples
LM4041DEM3-1.2/NOPB	ACTIVE	SOT-23	DBZ	3	1000	Green (RoHS & no Sb/Br)	CU SN	Level-1-260C-UNLIM	-40 to 125	R1D	Samples
LM4041DEM3-ADJ	NRND	SOT-23	DBZ	3	1000	TBD	Call TI	Call TI	-40 to 125	RAD	
LM4041DEM3-ADJ/NOPB	ACTIVE	SOT-23	DBZ	3	1000	Green (RoHS & no Sb/Br)	CU SN	Level-1-260C-UNLIM	-40 to 125	RAD	Samples
LM4041DEM3X-1.2/NOPB	ACTIVE	SOT-23	DBZ	3	3000	Green (RoHS & no Sb/Br)	CU SN	Level-1-260C-UNLIM	-40 to 125	R1D	Samples
LM4041DEM3X-ADJ/NOPB	ACTIVE	SOT-23	DBZ	3	3000	Green (RoHS & no Sb/Br)	CU SN	Level-1-260C-UNLIM	-40 to 125	RAD	Samples
LM4041DIM3-1.2	NRND	SOT-23	DBZ	3	1000	TBD	Call TI	Call TI	-40 to 85	R1D	

Orderable Device	Status (1)	Package Type	Package Drawing	Pins	Package Qty	Eco Plan (2)	Lead/Ball Finish (6)	MSL Peak Temp (3)	Op Temp (°C)	Device Marking (4/5)	Samples
LM4041DIM3-1.2/NOPB	ACTIVE	SOT-23	DBZ	3	1000	Green (RoHS & no Sb/Br)	CU SN	Level-1-260C-UNLIM	-40 to 85	R1D	Samples
LM4041DIM3-ADJ	NRND	SOT-23	DBZ	3	1000	TBD	Call TI	Call TI	-40 to 85	RAD	
LM4041DIM3-ADJ/NOPB	ACTIVE	SOT-23	DBZ	3	1000	Green (RoHS & no Sb/Br)	CU SN	Level-1-260C-UNLIM	-40 to 85	RAD	Samples
LM4041DIM3X-1.2	NRND	SOT-23	DBZ	3	3000	TBD	Call TI	Call TI	-40 to 85	R1D	
LM4041DIM3X-1.2/NOPB	ACTIVE	SOT-23	DBZ	3	3000	Green (RoHS & no Sb/Br)	CU SN	Level-1-260C-UNLIM	-40 to 85	R1D	Samples
LM4041DIM3X-ADJ	NRND	SOT-23	DBZ	3	3000	TBD	Call TI	Call TI	-40 to 85	RAD	
LM4041DIM3X-ADJ/NOPB	ACTIVE	SOT-23	DBZ	3	3000	Green (RoHS & no Sb/Br)	CU SN	Level-1-260C-UNLIM	-40 to 85	RAD	Samples
LM4041DIM7-1.2/NOPB	ACTIVE	SC70	DCK	5	1000	Green (RoHS & no Sb/Br)	CU SN	Level-1-260C-UNLIM	-40 to 85	R1D	Samples
LM4041DIM7-ADJ/NOPB	ACTIVE	SC70	DCK	5	1000	Green (RoHS & no Sb/Br)	CU SN	Level-1-260C-UNLIM	-40 to 85	RAD	Samples
LM4041DIM7X-1.2/NOPB	ACTIVE	SC70	DCK	5	3000	Green (RoHS & no Sb/Br)	CU SN	Level-1-260C-UNLIM	-40 to 85	R1D	Samples
LM4041DIM7X-ADJ/NOPB	ACTIVE	SC70	DCK	5	3000	Green (RoHS & no Sb/Br)	CU SN	Level-1-260C-UNLIM	-40 to 85	RAD	Samples
LM4041DIZ-1.2/NOPB	ACTIVE	TO-92	LP	3	1800	Green (RoHS & no Sb/Br)	SN | CU SN	N / A for Pkg Type	-40 to 85	4041D IZ1.2	Samples
LM4041DIZ-ADJ/LFT1	ACTIVE	TO-92	LP	3	2000	Green (RoHS & no Sb/Br)	SN | CU SN	N / A for Pkg Type		(4040D ~ 4041D) IZADJ	Samples
LM4041DIZ-ADJ/NOPB	ACTIVE	TO-92	LP	3	1800	Green (RoHS & no Sb/Br)	SN | CU SN	N / A for Pkg Type	-40 to 85	4041D IZADJ	Samples
LM4041EEM3-1.2	NRND	SOT-23	DBZ	3	1000	TBD	Call TI	Call TI	-40 to 125	R1E	
LM4041EEM3-1.2/NOPB	ACTIVE	SOT-23	DBZ	3	1000	Green (RoHS & no Sb/Br)	CU SN	Level-1-260C-UNLIM	-40 to 125	R1E	Samples
LM4041EEM3X-1.2	NRND	SOT-23	DBZ	3	3000	TBD	Call TI	Call TI	-40 to 125	R1E	
LM4041EEM3X-1.2/NOPB	ACTIVE	SOT-23	DBZ	3	3000	Green (RoHS & no Sb/Br)	CU SN	Level-1-260C-UNLIM	-40 to 125	R1E	Samples
LM4041EIM3-1.2	NRND	SOT-23	DBZ	3	1000	TBD	Call TI	Call TI	-40 to 85	R1E	
LM4041EIM3-1.2/NOPB	ACTIVE	SOT-23	DBZ	3	1000	Green (RoHS & no Sb/Br)	CU SN	Level-1-260C-UNLIM	-40 to 85	R1E	Samples
LM4041EIM3X-1.2	NRND	SOT-23	DBZ	3	3000	TBD	Call TI	Call TI	-40 to 85	R1E	

Orderable Device	Status (1)	Package Type	Package Drawing	Pins	Package Qty	Eco Plan (2)	Lead/Ball Finish (6)	MSL Peak Temp (3)	Op Temp (°C)	Device Marking (4/5)	Samples
LM4041EIM3X-1.2/NOPB	ACTIVE	SOT-23	DBZ	3	3000	Green (RoHS & no Sb/Br)	CU SN	Level-1-260C-UNLIM	-40 to 85	R1E	Samples
LM4041EIM7-1.2	NRND	SC70	DCK	5	1000	TBD	Call TI	Call TI	-40 to 85	R1E	
LM4041EIM7-1.2/NOPB	ACTIVE	SC70	DCK	5	1000	Green (RoHS & no Sb/Br)	CU SN	Level-1-260C-UNLIM	-40 to 85	R1E	Samples
LM4041EIM7X-1.2/NOPB	ACTIVE	SC70	DCK	5	3000	Green (RoHS & no Sb/Br)	CU SN	Level-1-260C-UNLIM	-40 to 85	R1E	Samples
LM4041QAIM3-1.2/NO	ACTIVE	SOT-23	DBZ	3	1000	Green (RoHS & no Sb/Br)	CU SN	Level-1-260C-UNLIM	-40 to 85	RQA	Samples
LM4041QAIM3X-1.2NO	PREVIEW	SOT-23	DBZ	3	3000	Green (RoHS & no Sb/Br)	CU SN	Level-1-260C-UNLIM	-40 to 85	RQA	
LM4041QBIM3-1.2/NO	ACTIVE	SOT-23	DBZ	3	1000	Green (RoHS & no Sb/Br)	CU SN	Level-1-260C-UNLIM	-40 to 85	RQB	Samples
LM4041QBIM3X-1.2NO	PREVIEW	SOT-23	DBZ	3	3000	TBD	Call TI	Call TI	-40 to 85	RQB	
LM4041QCEM3-1.2NO	ACTIVE	SOT-23	DBZ	3	1000	Green (RoHS & no Sb/Br)	CU SN	Level-1-260C-UNLIM	-40 to 125	RQC	Samples
LM4041QCEM3-ADJ/NO	PREVIEW	SOT-23	DBZ	3	1000	TBD	Call TI	Call TI	-40 to 125	RZC	
LM4041QCEM3X-1.2NO	ACTIVE	SOT-23	DBZ	3	3000	Green (RoHS & no Sb/Br)	CU SN	Level-1-260C-UNLIM	-40 to 125	RQC	Samples
LM4041QCEM3X-ADJNO	PREVIEW	SOT-23	DBZ	3	3000	TBD	Call TI	Call TI	-40 to 125	RZC	
LM4041QCIM3-1.2/NO	ACTIVE	SOT-23	DBZ	3	1000	Green (RoHS & no Sb/Br)	CU SN	Level-1-260C-UNLIM	-40 to 125	RQC	Samples
LM4041QCIM3-ADJ/NO	PREVIEW	SOT-23	DBZ	3	1000	TBD	Call TI	Call TI	-40 to 125	RZC	
LM4041QCIM3X-1.2NO	PREVIEW	SOT-23	DBZ	3	3000	TBD	Call TI	Call TI	-40 to 125	RQC	
LM4041QCIM3X-ADJNO	PREVIEW	SOT-23	DBZ	3	3000	TBD	Call TI	Call TI	-40 to 125	RZC	
LM4041QDEM3-1.2/NO	ACTIVE	SOT-23	DBZ	3	1000	TBD	Call TI	Call TI	-40 to 125	RQD	Samples
LM4041QDEM3-ADJ/NO	PREVIEW	SOT-23	DBZ	3	1000	TBD	Call TI	Call TI	-40 to 125	RZD	
LM4041QDEM3X-1.2NO	PREVIEW	SOT-23	DBZ	3	3000	TBD	Call TI	Call TI	-40 to 125	RQD	
LM4041QDEM3X-ADJNO	PREVIEW	SOT-23	DBZ	3	3000	TBD	Call TI	Call TI	-40 to 125	RZD	
LM4041QDIM3-1.2/NO	ACTIVE	SOT-23	DBZ	3	1000	Green (RoHS & no Sb/Br)	CU SN	Level-1-260C-UNLIM	-40 to 125	RQD	Samples
LM4041QDIM3-ADJ/NO	PREVIEW	SOT-23	DBZ	3	1000	TBD	Call TI	Call TI	-40 to 125	RZD	
LM4041QDIM3X-1.2NO	PREVIEW	SOT-23	DBZ	3	3000	Green (RoHS & no Sb/Br)	CU SN	Level-1-260C-UNLIM	-40 to 125	RQD	

Orderable Device	Status (1)	Package Type	Package Drawing	Pins	Package Qty	Eco Plan (2)	Lead/Ball Finish (6)	MSL Peak Temp (3)	Op Temp (°C)	Device Marking (4/5)	Samples
LM4041QDIM3X-ADJNO	PREVIEW	SOT-23	DBZ	3	3000	TBD	Call TI	Call TI	-40 to 125	RZD	
LM4041QEEM3-1.2/NO	ACTIVE	SOT-23	DBZ	3	1000	Green (RoHS & no Sb/Br)	CU SN	Level-1-260C-UNLIM	-40 to 125	RQE	Samples
LM4041QEEM3X-1.2NO	ACTIVE	SOT-23	DBZ	3	3000	TBD	Call TI	Call TI	-40 to 125	RQE	Samples
LM4041QEIM3-1.2/NO	ACTIVE	SOT-23	DBZ	3	1000	Green (RoHS & no Sb/Br)	CU SN	Level-1-260C-UNLIM	-40 to 125	RQE	Samples
LM4041QEIM3X-1.2NO	PREVIEW	SOT-23	DBZ	3	3000	TBD	Call TI	Call TI	-40 to 125	RQE	

(1) The marketing status values are defined as follows:
ACTIVE: Product device recommended for new designs.
LIFEBUY: TI has announced that the device will be discontinued, and a lifetime-buy period is in effect.
NRND: Not recommended for new designs. Device is in production to support existing customers, but TI does not recommend using this part in a new design.
PREVIEW: Device has been announced but is not in production. Samples may or may not be available.
OBSOLETE: TI has discontinued the production of the device.

(2) Eco Plan - The planned eco-friendly classification: Pb-Free (RoHS), Pb-Free (RoHS Exempt), or Green (RoHS & no Sb/Br) - please check http://www.ti.com/productcontent for the latest availability information and additional product content details.
TBD: The Pb-Free/Green conversion plan has not been defined.
Pb-Free (RoHS): TI's terms "Lead-Free" or "Pb-Free" mean semiconductor products that are compatible with the current RoHS requirements for all 6 substances, including the requirement that lead not exceed 0.1% by weight in homogeneous materials. Where designed to be soldered at high temperatures, TI Pb-Free products are suitable for use in specified lead-free processes.
Pb-Free (RoHS Exempt): This component has a RoHS exemption for either 1) lead-based flip-chip solder bumps used between the die and package, or 2) lead-based die adhesive used between the die and leadframe. The component is otherwise considered Pb-Free (RoHS compatible) as defined above.
Green (RoHS & no Sb/Br): TI defines "Green" to mean Pb-Free (RoHS compatible), and free of Bromine (Br) and Antimony (Sb) based flame retardants (Br or Sb do not exceed 0.1% by weight in homogeneous material)

(3) MSL, Peak Temp. - The Moisture Sensitivity Level rating according to the JEDEC industry standard classifications, and peak solder temperature.

(4) There may be additional marking, which relates to the logo, the lot trace code information, or the environmental category on the device.

(5) Multiple Device Markings will be inside parentheses. Only one Device Marking contained in parentheses and separated by a "~" will appear on a device. If a line is indented then it is a continuation of the previous line and the two combined represent the entire Device Marking for that device.

(6) Lead/Ball Finish - Orderable Devices may have multiple material finish options. Finish options are separated by a vertical ruled line. Lead/Ball Finish values may wrap to two lines if the finish value exceeds the maximum column width.

Important Information and Disclaimer: The information provided on this page represents TI's knowledge and belief as of the date that it is provided. TI bases its knowledge and belief on information provided by third parties, and makes no representation or warranty as to the accuracy of such information. Efforts are underway to better integrate information from third parties. TI has taken and

continues to take reasonable steps to provide representative and accurate information but may not have conducted destructive testing or chemical analysis on incoming materials and chemicals. TI and TI suppliers consider certain information to be proprietary, and thus CAS numbers and other limited information may not be available for release.

In no event shall TI's liability arising out of such information exceed the total purchase price of the TI part(s) at issue in this document sold by TI to Customer on an annual basis.

OTHER QUALIFIED VERSIONS OF LM4041-N, LM4041-N-Q1 :

- Catalog: LM4041-N
- Automotive: LM4041-N-Q1

NOTE: Qualified Version Definitions:

- Catalog - TI's standard catalog product
- Automotive - Q100 devices qualified for high-reliability automotive applications targeting zero defects

TAPE AND REEL INFORMATION

REEL DIMENSIONS

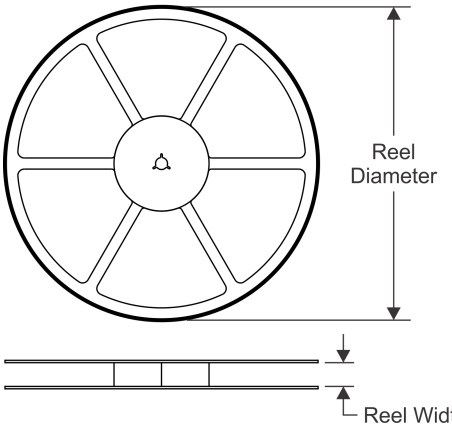

TAPE DIMENSIONS

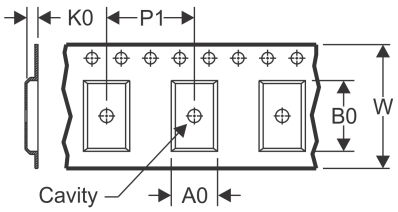

A0	Dimension designed to accommodate the component width
B0	Dimension designed to accommodate the component length
K0	Dimension designed to accommodate the component thickness
W	Overall width of the carrier tape
P1	Pitch between successive cavity centers

QUADRANT ASSIGNMENTS FOR PIN 1 ORIENTATION IN TAPE

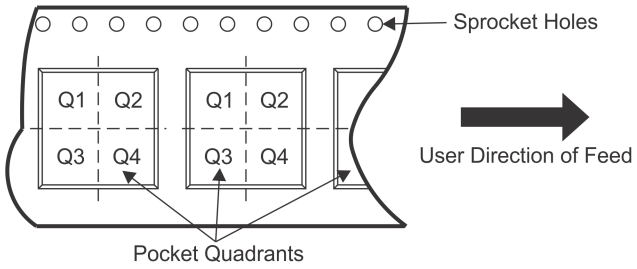

*All dimensions are nominal

Device	Package Type	Package Drawing	Pins	SPQ	Reel Diameter (mm)	Reel Width W1 (mm)	A0 (mm)	B0 (mm)	K0 (mm)	P1 (mm)	W (mm)	Pin1 Quadrant
LM4041AIM3-1.2	SOT-23	DBZ	3	1000	178.0	8.4	3.3	2.9	1.22	4.0	8.0	Q3
LM4041AIM3-1.2/NOPB	SOT-23	DBZ	3	1000	178.0	8.4	3.3	2.9	1.22	4.0	8.0	Q3
LM4041AIM3X-1.2/NOPB	SOT-23	DBZ	3	3000	178.0	8.4	3.3	2.9	1.22	4.0	8.0	Q3
LM4041BIM3-1.2	SOT-23	DBZ	3	1000	178.0	8.4	3.3	2.9	1.22	4.0	8.0	Q3
LM4041BIM3-1.2/NOPB	SOT-23	DBZ	3	1000	178.0	8.4	3.3	2.9	1.22	4.0	8.0	Q3
LM4041BIM3X-1.2/NOPB	SOT-23	DBZ	3	3000	178.0	8.4	3.3	2.9	1.22	4.0	8.0	Q3
LM4041BIM7-1.2	SC70	DCK	5	1000	178.0	8.4	2.25	2.45	1.2	4.0	8.0	Q3
LM4041BIM7-1.2/NOPB	SC70	DCK	5	1000	178.0	8.4	2.25	2.45	1.2	4.0	8.0	Q3
LM4041BIM7X-1.2	SC70	DCK	5	3000	178.0	8.4	2.25	2.45	1.2	4.0	8.0	Q3
LM4041BIM7X-1.2/NOPB	SC70	DCK	5	3000	178.0	8.4	2.25	2.45	1.2	4.0	8.0	Q3
LM4041CEM3-1.2	SOT-23	DBZ	3	1000	178.0	8.4	3.3	2.9	1.22	4.0	8.0	Q3
LM4041CEM3-1.2/NOPB	SOT-23	DBZ	3	1000	178.0	8.4	3.3	2.9	1.22	4.0	8.0	Q3
LM4041CEM3-ADJ	SOT-23	DBZ	3	1000	178.0	8.4	3.3	2.9	1.22	4.0	8.0	Q3
LM4041CEM3-ADJ/NOPB	SOT-23	DBZ	3	1000	178.0	8.4	3.3	2.9	1.22	4.0	8.0	Q3
LM4041CEM3X-1.2/NOPB	SOT-23	DBZ	3	3000	178.0	8.4	3.3	2.9	1.22	4.0	8.0	Q3
LM4041CEM3X-ADJ	SOT-23	DBZ	3	3000	178.0	8.4	3.3	2.9	1.22	4.0	8.0	Q3
LM4041CEM3X-ADJ/NOPB	SOT-23	DBZ	3	3000	178.0	8.4	3.3	2.9	1.22	4.0	8.0	Q3

Device	Package Type	Package Drawing	Pins	SPQ	Reel Diameter (mm)	Reel Width W1 (mm)	A0 (mm)	B0 (mm)	K0 (mm)	P1 (mm)	W (mm)	Pin1 Quadrant
LM4041CIM3-1.2	SOT-23	DBZ	3	1000	178.0	8.4	3.3	2.9	1.22	4.0	8.0	Q3
LM4041CIM3-1.2/NOPB	SOT-23	DBZ	3	1000	178.0	8.4	3.3	2.9	1.22	4.0	8.0	Q3
LM4041CIM3-ADJ	SOT-23	DBZ	3	1000	178.0	8.4	3.3	2.9	1.22	4.0	8.0	Q3
LM4041CIM3-ADJ/NOPB	SOT-23	DBZ	3	1000	178.0	8.4	3.3	2.9	1.22	4.0	8.0	Q3
LM4041CIM3X-1.2	SOT-23	DBZ	3	3000	178.0	8.4	3.3	2.9	1.22	4.0	8.0	Q3
LM4041CIM3X-1.2/NOPB	SOT-23	DBZ	3	3000	178.0	8.4	3.3	2.9	1.22	4.0	8.0	Q3
LM4041CIM3X-ADJ	SOT-23	DBZ	3	3000	178.0	8.4	3.3	2.9	1.22	4.0	8.0	Q3
LM4041CIM3X-ADJ/NOPB	SOT-23	DBZ	3	3000	178.0	8.4	3.3	2.9	1.22	4.0	8.0	Q3
LM4041CIM7-1.2/NOPB	SC70	DCK	5	1000	178.0	8.4	2.25	2.45	1.2	4.0	8.0	Q3
LM4041CIM7-ADJ	SC70	DCK	5	1000	178.0	8.4	2.25	2.45	1.2	4.0	8.0	Q3
LM4041CIM7-ADJ/NOPB	SC70	DCK	5	1000	178.0	8.4	2.25	2.45	1.2	4.0	8.0	Q3
LM4041CIM7X-1.2/NOPB	SC70	DCK	5	3000	178.0	8.4	2.25	2.45	1.2	4.0	8.0	Q3
LM4041CIM7X-ADJ	SC70	DCK	5	3000	178.0	8.4	2.25	2.45	1.2	4.0	8.0	Q3
LM4041CIM7X-ADJ/NOPB	SC70	DCK	5	3000	178.0	8.4	2.25	2.45	1.2	4.0	8.0	Q3
LM4041DEM3-1.2/NOPB	SOT-23	DBZ	3	1000	178.0	8.4	3.3	2.9	1.22	4.0	8.0	Q3
LM4041DEM3-ADJ	SOT-23	DBZ	3	1000	178.0	8.4	3.3	2.9	1.22	4.0	8.0	Q3
LM4041DEM3-ADJ/NOPB	SOT-23	DBZ	3	1000	178.0	8.4	3.3	2.9	1.22	4.0	8.0	Q3
LM4041DEM3X-1.2/NOPB	SOT-23	DBZ	3	3000	178.0	8.4	3.3	2.9	1.22	4.0	8.0	Q3
LM4041DEM3X-ADJ/NOPB	SOT-23	DBZ	3	3000	178.0	8.4	3.3	2.9	1.22	4.0	8.0	Q3
LM4041DIM3-1.2	SOT-23	DBZ	3	1000	178.0	8.4	3.3	2.9	1.22	4.0	8.0	Q3
LM4041DIM3-1.2/NOPB	SOT-23	DBZ	3	1000	178.0	8.4	3.3	2.9	1.22	4.0	8.0	Q3
LM4041DIM3-ADJ	SOT-23	DBZ	3	1000	178.0	8.4	3.3	2.9	1.22	4.0	8.0	Q3
LM4041DIM3-ADJ/NOPB	SOT-23	DBZ	3	1000	178.0	8.4	3.3	2.9	1.22	4.0	8.0	Q3
LM4041DIM3X-1.2	SOT-23	DBZ	3	3000	178.0	8.4	3.3	2.9	1.22	4.0	8.0	Q3
LM4041DIM3X-1.2/NOPB	SOT-23	DBZ	3	3000	178.0	8.4	3.3	2.9	1.22	4.0	8.0	Q3
LM4041DIM3X-ADJ	SOT-23	DBZ	3	3000	178.0	8.4	3.3	2.9	1.22	4.0	8.0	Q3
LM4041DIM3X-ADJ/NOPB	SOT-23	DBZ	3	3000	178.0	8.4	3.3	2.9	1.22	4.0	8.0	Q3
LM4041DIM7-1.2/NOPB	SC70	DCK	5	1000	178.0	8.4	2.25	2.45	1.2	4.0	8.0	Q3
LM4041DIM7-ADJ/NOPB	SC70	DCK	5	1000	178.0	8.4	2.25	2.45	1.2	4.0	8.0	Q3
LM4041DIM7X-1.2/NOPB	SC70	DCK	5	3000	178.0	8.4	2.25	2.45	1.2	4.0	8.0	Q3
LM4041DIM7X-ADJ/NOPB	SC70	DCK	5	3000	178.0	8.4	2.25	2.45	1.2	4.0	8.0	Q3
LM4041EEM3-1.2	SOT-23	DBZ	3	1000	178.0	8.4	3.3	2.9	1.22	4.0	8.0	Q3
LM4041EEM3-1.2/NOPB	SOT-23	DBZ	3	1000	178.0	8.4	3.3	2.9	1.22	4.0	8.0	Q3
LM4041EEM3X-1.2	SOT-23	DBZ	3	3000	178.0	8.4	3.3	2.9	1.22	4.0	8.0	Q3
LM4041EEM3X-1.2/NOPB	SOT-23	DBZ	3	3000	178.0	8.4	3.3	2.9	1.22	4.0	8.0	Q3
LM4041EIM3-1.2	SOT-23	DBZ	3	1000	178.0	8.4	3.3	2.9	1.22	4.0	8.0	Q3
LM4041EIM3-1.2/NOPB	SOT-23	DBZ	3	1000	178.0	8.4	3.3	2.9	1.22	4.0	8.0	Q3
LM4041EIM3X-1.2	SOT-23	DBZ	3	3000	178.0	8.4	3.3	2.9	1.22	4.0	8.0	Q3
LM4041EIM3X-1.2/NOPB	SOT-23	DBZ	3	3000	178.0	8.4	3.3	2.9	1.22	4.0	8.0	Q3

Device	Package Type	Package Drawing	Pins	SPQ	Reel Diameter (mm)	Reel Width W1 (mm)	A0 (mm)	B0 (mm)	K0 (mm)	P1 (mm)	W (mm)	Pin1 Quadrant
LM4041EIM7-1.2	SC70	DCK	5	1000	178.0	8.4	2.25	2.45	1.2	4.0	8.0	Q3
LM4041EIM7-1.2/NOPB	SC70	DCK	5	1000	178.0	8.4	2.25	2.45	1.2	4.0	8.0	Q3
LM4041EIM7X-1.2/NOPB	SC70	DCK	5	3000	178.0	8.4	2.25	2.45	1.2	4.0	8.0	Q3
LM4041QAIM3-1.2/NO	SOT-23	DBZ	3	1000	178.0	8.4	3.3	2.9	1.22	4.0	8.0	Q3
LM4041QBIM3-1.2/NO	SOT-23	DBZ	3	1000	178.0	8.4	3.3	2.9	1.22	4.0	8.0	Q3
LM4041QCEM3-1.2NO	SOT-23	DBZ	3	1000	178.0	8.4	3.3	2.9	1.22	4.0	8.0	Q3
LM4041QCIM3-1.2/NO	SOT-23	DBZ	3	1000	178.0	8.4	3.3	2.9	1.22	4.0	8.0	Q3
LM4041QDEM3-1.2/NO	SOT-23	DBZ	3	1000	178.0	8.4	3.3	2.9	1.22	4.0	8.0	Q3
LM4041QDIM3-1.2/NO	SOT-23	DBZ	3	1000	178.0	8.4	3.3	2.9	1.22	4.0	8.0	Q3
LM4041QEEM3-1.2/NO	SOT-23	DBZ	3	1000	178.0	8.4	3.3	2.9	1.22	4.0	8.0	Q3
LM4041QEEM3X-1.2NO	SOT-23	DBZ	3	3000	178.0	8.4	3.3	2.9	1.22	4.0	8.0	Q3

TAPE AND REEL BOX DIMENSIONS

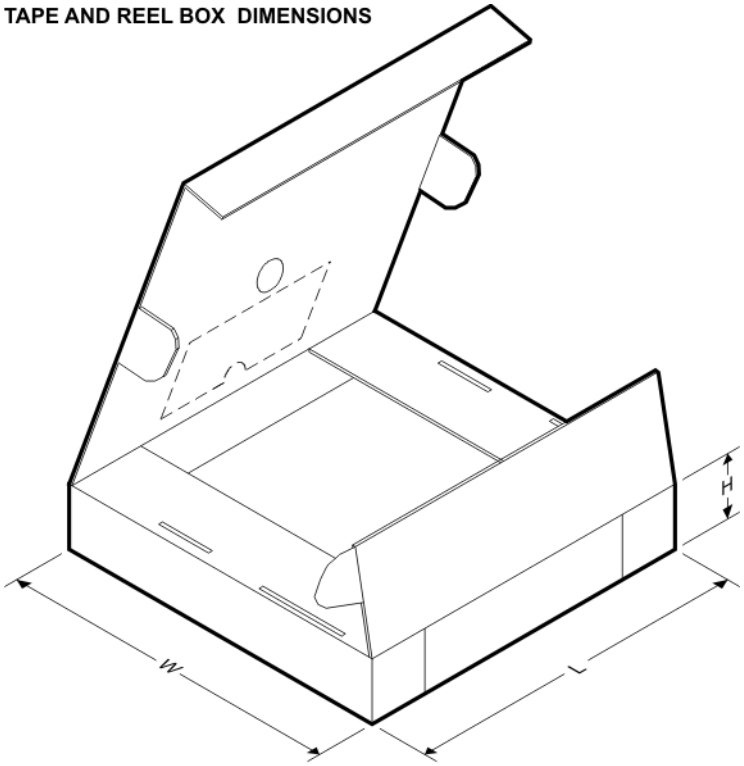

*All dimensions are nominal

Device	Package Type	Package Drawing	Pins	SPQ	Length (mm)	Width (mm)	Height (mm)
LM4041AIM3-1.2	SOT-23	DBZ	3	1000	210.0	185.0	35.0
LM4041AIM3-1.2/NOPB	SOT-23	DBZ	3	1000	210.0	185.0	35.0
LM4041AIM3X-1.2/NOPB	SOT-23	DBZ	3	3000	210.0	185.0	35.0
LM4041BIM3-1.2	SOT-23	DBZ	3	1000	210.0	185.0	35.0
LM4041BIM3-1.2/NOPB	SOT-23	DBZ	3	1000	210.0	185.0	35.0
LM4041BIM3X-1.2/NOPB	SOT-23	DBZ	3	3000	210.0	185.0	35.0

Device	Package Type	Package Drawing	Pins	SPQ	Length (mm)	Width (mm)	Height (mm)
LM4041BIM7-1.2	SC70	DCK	5	1000	210.0	185.0	35.0
LM4041BIM7-1.2/NOPB	SC70	DCK	5	1000	210.0	185.0	35.0
LM4041BIM7X-1.2	SC70	DCK	5	3000	210.0	185.0	35.0
LM4041BIM7X-1.2/NOPB	SC70	DCK	5	3000	210.0	185.0	35.0
LM4041CEM3-1.2	SOT-23	DBZ	3	1000	210.0	185.0	35.0
LM4041CEM3-1.2/NOPB	SOT-23	DBZ	3	1000	210.0	185.0	35.0
LM4041CEM3-ADJ	SOT-23	DBZ	3	1000	210.0	185.0	35.0
LM4041CEM3-ADJ/NOPB	SOT-23	DBZ	3	1000	210.0	185.0	35.0
LM4041CEM3X-1.2/NOPB	SOT-23	DBZ	3	3000	210.0	185.0	35.0
LM4041CEM3X-ADJ	SOT-23	DBZ	3	3000	210.0	185.0	35.0
LM4041CEM3X-ADJ/NOPB	SOT-23	DBZ	3	3000	210.0	185.0	35.0
LM4041CIM3-1.2	SOT-23	DBZ	3	1000	210.0	185.0	35.0
LM4041CIM3-1.2/NOPB	SOT-23	DBZ	3	1000	210.0	185.0	35.0
LM4041CIM3-ADJ	SOT-23	DBZ	3	1000	210.0	185.0	35.0
LM4041CIM3-ADJ/NOPB	SOT-23	DBZ	3	1000	210.0	185.0	35.0
LM4041CIM3X-1.2	SOT-23	DBZ	3	3000	210.0	185.0	35.0
LM4041CIM3X-1.2/NOPB	SOT-23	DBZ	3	3000	210.0	185.0	35.0
LM4041CIM3X-ADJ	SOT-23	DBZ	3	3000	210.0	185.0	35.0
LM4041CIM3X-ADJ/NOPB	SOT-23	DBZ	3	3000	210.0	185.0	35.0
LM4041CIM7-1.2/NOPB	SC70	DCK	5	1000	210.0	185.0	35.0
LM4041CIM7-ADJ	SC70	DCK	5	1000	210.0	185.0	35.0
LM4041CIM7-ADJ/NOPB	SC70	DCK	5	1000	210.0	185.0	35.0
LM4041CIM7X-1.2/NOPB	SC70	DCK	5	3000	210.0	185.0	35.0
LM4041CIM7X-ADJ	SC70	DCK	5	3000	210.0	185.0	35.0
LM4041CIM7X-ADJ/NOPB	SC70	DCK	5	3000	210.0	185.0	35.0
LM4041DEM3-1.2/NOPB	SOT-23	DBZ	3	1000	210.0	185.0	35.0
LM4041DEM3-ADJ	SOT-23	DBZ	3	1000	210.0	185.0	35.0
LM4041DEM3-ADJ/NOPB	SOT-23	DBZ	3	1000	210.0	185.0	35.0
LM4041DEM3X-1.2/NOPB	SOT-23	DBZ	3	3000	210.0	185.0	35.0
LM4041DEM3X-ADJ/NOPB	SOT-23	DBZ	3	3000	210.0	185.0	35.0
LM4041DIM3-1.2	SOT-23	DBZ	3	1000	210.0	185.0	35.0
LM4041DIM3-1.2/NOPB	SOT-23	DBZ	3	1000	210.0	185.0	35.0
LM4041DIM3-ADJ	SOT-23	DBZ	3	1000	210.0	185.0	35.0
LM4041DIM3-ADJ/NOPB	SOT-23	DBZ	3	1000	210.0	185.0	35.0
LM4041DIM3X-1.2	SOT-23	DBZ	3	3000	210.0	185.0	35.0
LM4041DIM3X-1.2/NOPB	SOT-23	DBZ	3	3000	210.0	185.0	35.0
LM4041DIM3X-ADJ	SOT-23	DBZ	3	3000	210.0	185.0	35.0
LM4041DIM3X-ADJ/NOPB	SOT-23	DBZ	3	3000	210.0	185.0	35.0
LM4041DIM7-1.2/NOPB	SC70	DCK	5	1000	210.0	185.0	35.0
LM4041DIM7-ADJ/NOPB	SC70	DCK	5	1000	210.0	185.0	35.0
LM4041DIM7X-1.2/NOPB	SC70	DCK	5	3000	210.0	185.0	35.0
LM4041DIM7X-ADJ/NOPB	SC70	DCK	5	3000	210.0	185.0	35.0

Device	Package Type	Package Drawing	Pins	SPQ	Length (mm)	Width (mm)	Height (mm)
LM4041EEM3-1.2	SOT-23	DBZ	3	1000	210.0	185.0	35.0
LM4041EEM3-1.2/NOPB	SOT-23	DBZ	3	1000	210.0	185.0	35.0
LM4041EEM3X-1.2	SOT-23	DBZ	3	3000	210.0	185.0	35.0
LM4041EEM3X-1.2/NOPB	SOT-23	DBZ	3	3000	210.0	185.0	35.0
LM4041EIM3-1.2	SOT-23	DBZ	3	1000	210.0	185.0	35.0
LM4041EIM3-1.2/NOPB	SOT-23	DBZ	3	1000	210.0	185.0	35.0
LM4041EIM3X-1.2	SOT-23	DBZ	3	3000	210.0	185.0	35.0
LM4041EIM3X-1.2/NOPB	SOT-23	DBZ	3	3000	210.0	185.0	35.0
LM4041EIM7-1.2	SC70	DCK	5	1000	210.0	185.0	35.0
LM4041EIM7-1.2/NOPB	SC70	DCK	5	1000	210.0	185.0	35.0
LM4041EIM7X-1.2/NOPB	SC70	DCK	5	3000	210.0	185.0	35.0
LM4041QAIM3-1.2/NO	SOT-23	DBZ	3	1000	210.0	185.0	35.0
LM4041QBIM3-1.2/NO	SOT-23	DBZ	3	1000	210.0	185.0	35.0
LM4041QCEM3-1.2NO	SOT-23	DBZ	3	1000	210.0	185.0	35.0
LM4041QCIM3-1.2/NO	SOT-23	DBZ	3	1000	210.0	185.0	35.0
LM4041QDEM3-1.2/NO	SOT-23	DBZ	3	1000	210.0	185.0	35.0
LM4041QDIM3-1.2/NO	SOT-23	DBZ	3	1000	210.0	185.0	35.0
LM4041QEEM3-1.2/NO	SOT-23	DBZ	3	1000	210.0	185.0	35.0
LM4041QEEM3X-1.2NO	SOT-23	DBZ	3	3000	210.0	185.0	35.0

DCK (R–PDSO–G5) PLASTIC SMALL–OUTLINE PACKAGE

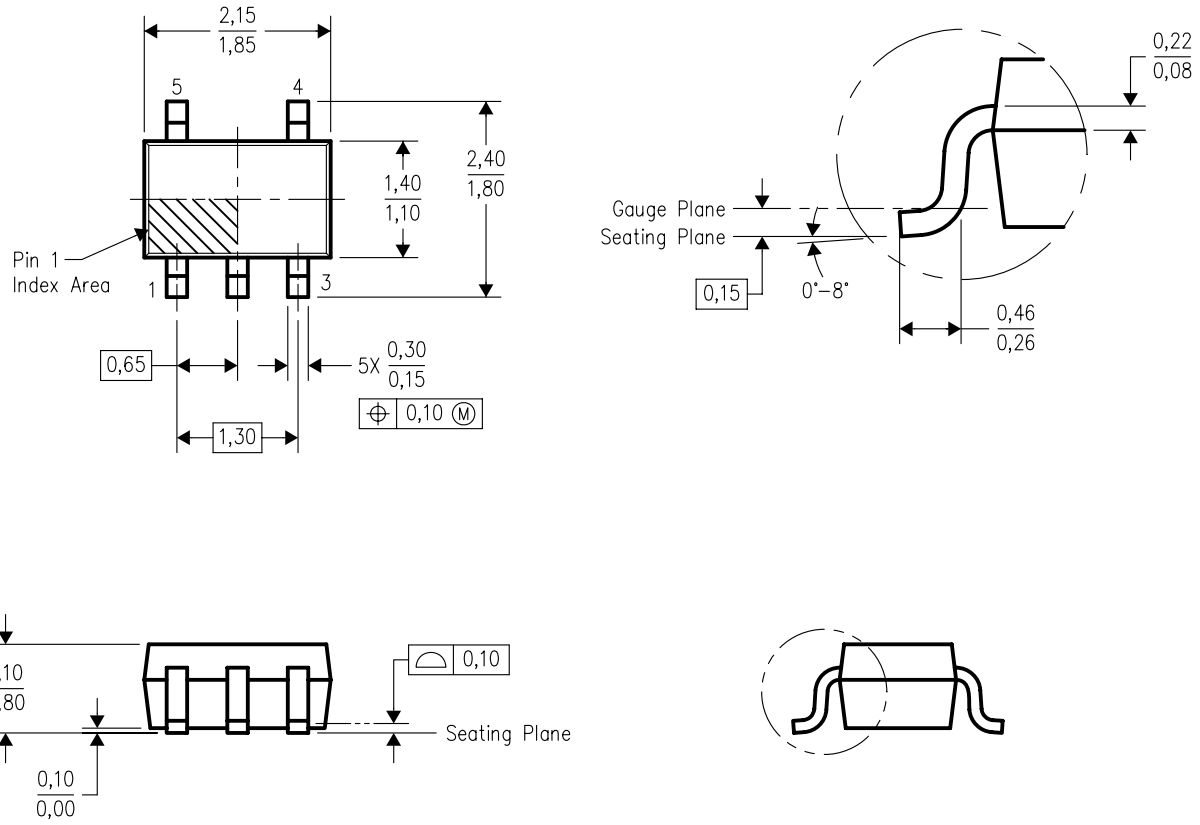

4093553–3/G 01/2007

NOTES:
A. All linear dimensions are in millimeters.
B. This drawing is subject to change without notice.
C. Body dimensions do not include mold flash or protrusion. Mold flash and protrusion shall not exceed 0.15 per side.
D. Falls within JEDEC MO–203 variation AA.

DBZ (R–PDSO–G3) PLASTIC SMALL–OUTLINE

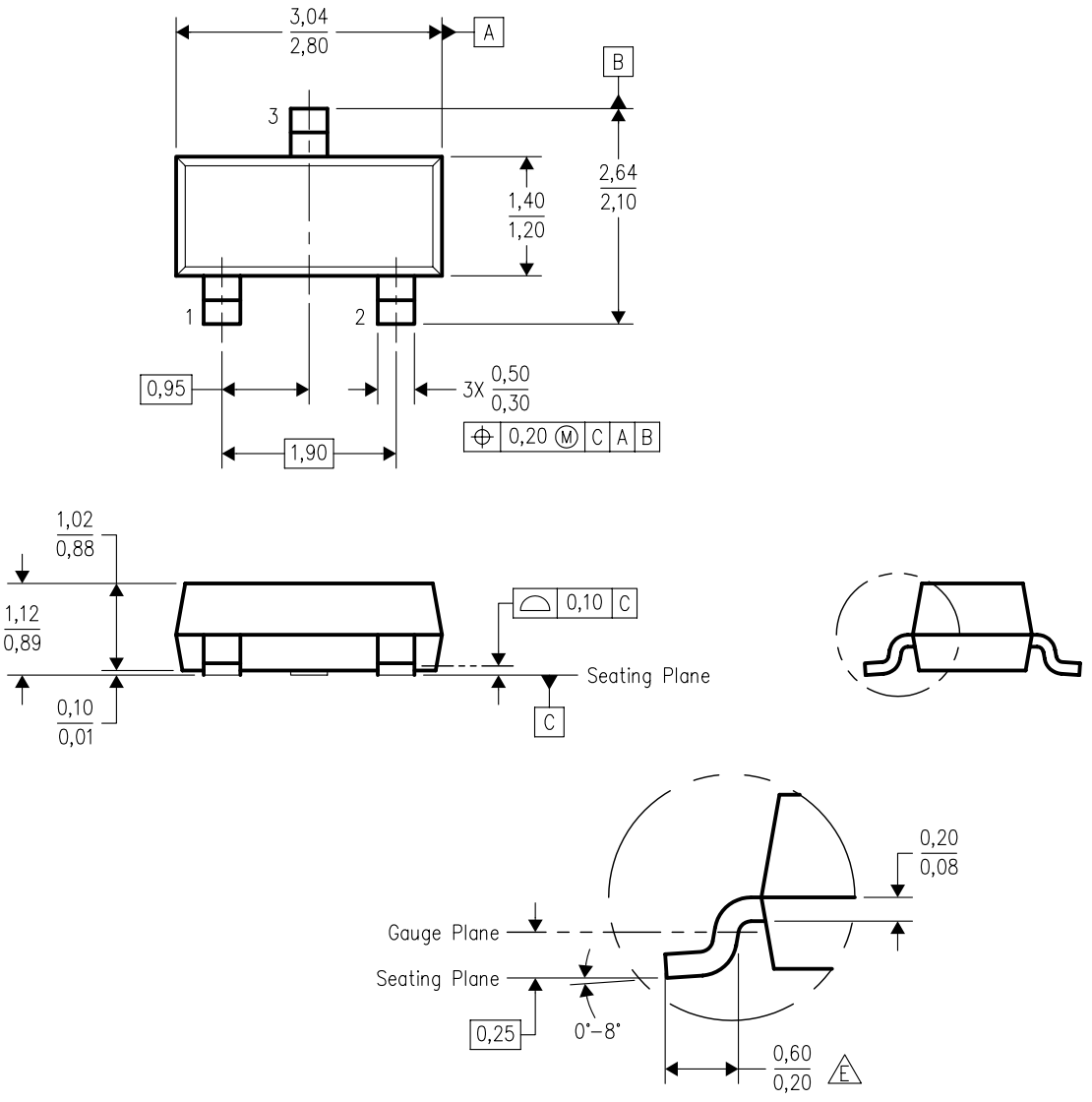

NOTES:
A. All linear dimensions are in millimeters. Dimensioning and tolerancing per ASME Y14.5M–1994.
B. This drawing is subject to change without notice.
C. Lead dimensions are inclusive of plating.
D. Body dimensions are exclusive of mold flash and protrusion. Mold flash and protrusion not to exceed 0.25 per side.
E. Falls within JEDEC TO–236 variation AB, except minimum foot length.

LP (O–PBCY–W3) PLASTIC CYLINDRICAL PACKAGE

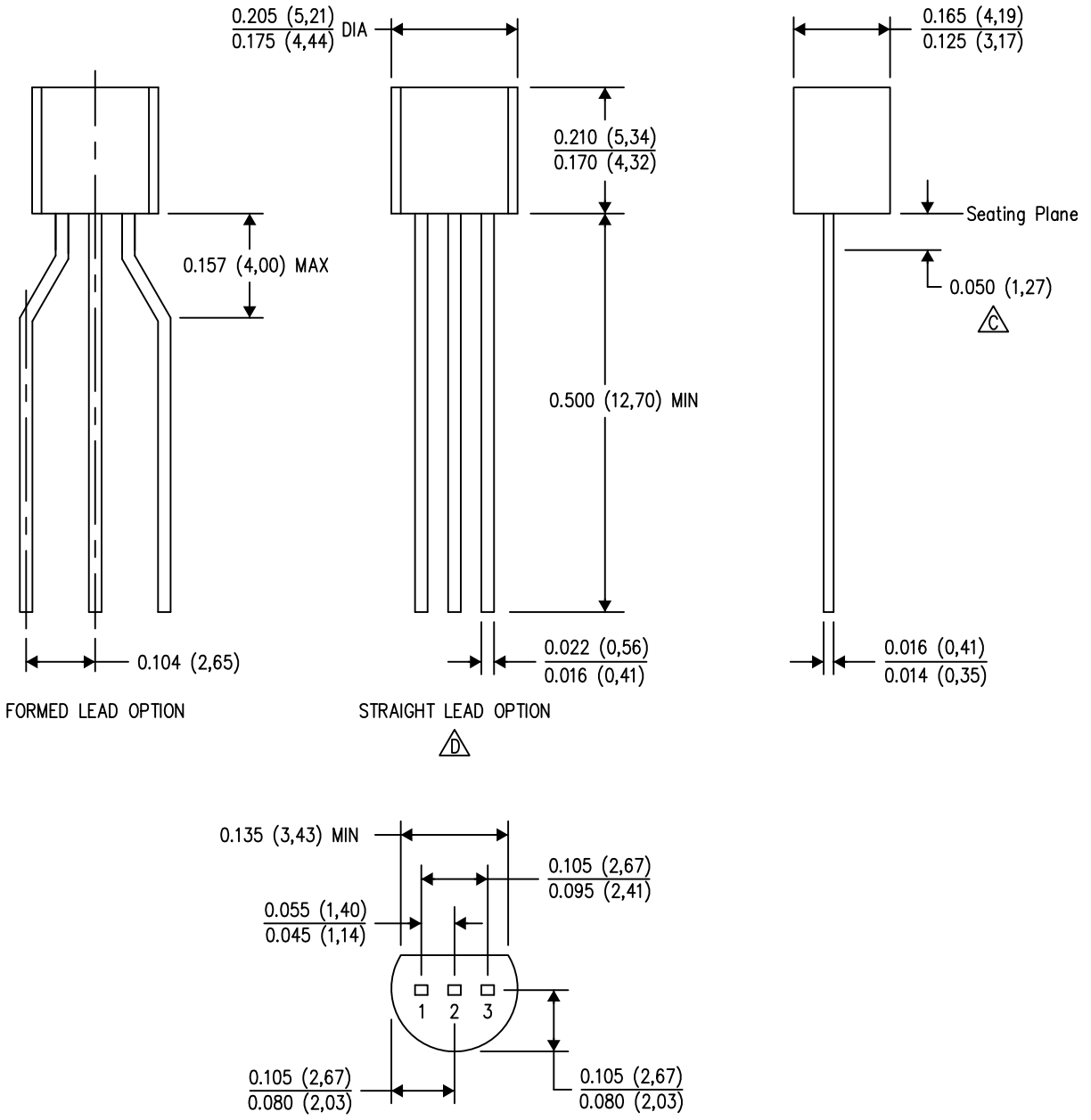

NOTES:
A. All linear dimensions are in inches (millimeters).
B. This drawing is subject to change without notice.
C. Lead dimensions are not controlled within this area.
D. Falls within JEDEC TO–226 Variation AA (TO–226 replaces TO–92).
E. Shipping Method:
Straight lead option available in bulk pack only.
Formed lead option available in tape & reel or ammo pack.
Specific products can be offered in limited combinations of shipping mediums and lead options.
Consult product folder for more information on available options.

LP (O–PBCY–W3) PLASTIC CYLINDRICAL PACKAGE

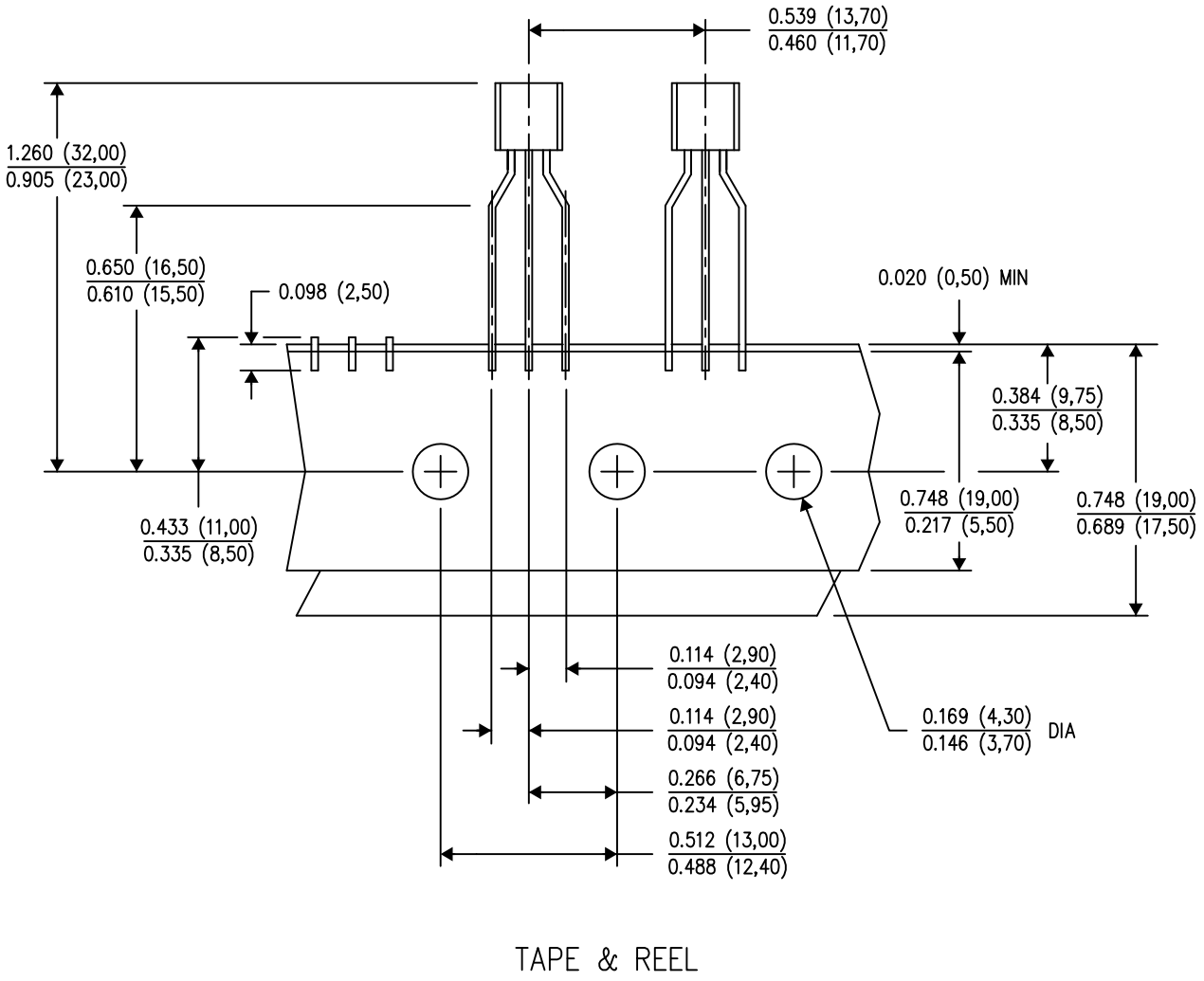

NOTES:
A. All linear dimensions are in inches (millimeters).
B. This drawing is subject to change without notice.
C. Tape and Reel information for the Formed Lead Option package.

IMPORTANT NOTICE

Texas Instruments Incorporated and its subsidiaries (TI) reserve the right to make corrections, enhancements, improvements and other changes to its semiconductor products and services per JESD46, latest issue, and to discontinue any product or service per JESD48, latest issue. Buyers should obtain the latest relevant information before placing orders and should verify that such information is current and complete. All semiconductor products (also referred to herein as “components”) are sold subject to TI’s terms and conditions of sale supplied at the time of order acknowledgment.

TI warrants performance of its components to the specifications applicable at the time of sale, in accordance with the warranty in TI’s terms and conditions of sale of semiconductor products. Testing and other quality control techniques are used to the extent TI deems necessary to support this warranty. Except where mandated by applicable law, testing of all parameters of each component is not necessarily performed.

TI assumes no liability for applications assistance or the design of Buyers’ products. Buyers are responsible for their products and applications using TI components. To minimize the risks associated with Buyers’ products and applications, Buyers should provide adequate design and operating safeguards.

TI does not warrant or represent that any license, either express or implied, is granted under any patent right, copyright, mask work right, or other intellectual property right relating to any combination, machine, or process in which TI components or services are used. Information published by TI regarding third-party products or services does not constitute a license to use such products or services or a warranty or endorsement thereof. Use of such information may require a license from a third party under the patents or other intellectual property of the third party, or a license from TI under the patents or other intellectual property of TI.

Reproduction of significant portions of TI information in TI data books or data sheets is permissible only if reproduction is without alteration and is accompanied by all associated warranties, conditions, limitations, and notices. TI is not responsible or liable for such altered documentation. Information of third parties may be subject to additional restrictions.

Resale of TI components or services with statements different from or beyond the parameters stated by TI for that component or service voids all express and any implied warranties for the associated TI component or service and is an unfair and deceptive business practice. TI is not responsible or liable for any such statements.

Buyer acknowledges and agrees that it is solely responsible for compliance with all legal, regulatory and safety-related requirements concerning its products, and any use of TI components in its applications, notwithstanding any applications-related information or support that may be provided by TI. Buyer represents and agrees that it has all the necessary expertise to create and implement safeguards which anticipate dangerous consequences of failures, monitor failures and their consequences, lessen the likelihood of failures that might cause harm and take appropriate remedial actions. Buyer will fully indemnify TI and its representatives against any damages arising out of the use of any TI components in safety-critical applications.

In some cases, TI components may be promoted specifically to facilitate safety-related applications. With such components, TI’s goal is to help enable customers to design and create their own end-product solutions that meet applicable functional safety standards and requirements. Nonetheless, such components are subject to these terms.

No TI components are authorized for use in FDA Class III (or similar life-critical medical equipment) unless authorized officers of the parties have executed a special agreement specifically governing such use.

Only those TI components which TI has specifically designated as military grade or “enhanced plastic” are designed and intended for use in military/aerospace applications or environments. Buyer acknowledges and agrees that any military or aerospace use of TI components which have ***not*** been so designated is solely at the Buyer's risk, and that Buyer is solely responsible for compliance with all legal and regulatory requirements in connection with such use.

TI has specifically designated certain components as meeting ISO/TS16949 requirements, mainly for automotive use. In any case of use of non-designated products, TI will not be responsible for any failure to meet ISO/TS16949.

Products		**Applications**	
Audio	www.ti.com/audio	Automotive and Transportation	www.ti.com/automotive
Amplifiers	amplifier.ti.com	Communications and Telecom	www.ti.com/communications
Data Converters	dataconverter.ti.com	Computers and Peripherals	www.ti.com/computers
DLP® Products	www.dlp.com	Consumer Electronics	www.ti.com/consumer-apps
DSP	dsp.ti.com	Energy and Lighting	www.ti.com/energy
Clocks and Timers	www.ti.com/clocks	Industrial	www.ti.com/industrial
Interface	interface.ti.com	Medical	www.ti.com/medical
Logic	logic.ti.com	Security	www.ti.com/security
Power Mgmt	power.ti.com	Space, Avionics and Defense	www.ti.com/space-avionics-defense
Microcontrollers	microcontroller.ti.com	Video and Imaging	www.ti.com/video
RFID	www.ti-rfid.com		
OMAP Applications Processors	www.ti.com/omap	**TI E2E Community**	e2e.ti.com
Wireless Connectivity	www.ti.com/wirelessconnectivity		

Mailing Address: Texas Instruments, Post Office Box 655303, Dallas, Texas 75265
Copyright © 2013, Texas Instruments Incorporated